Cambridge IGCSE

Cambridge International Examinations
Cambridge International General Certificate of Secondary Education

CANDIDATE NAME									
CENTRE NUMBER						CANDIDATE NUMBER			

PHYSICS **0625/33**

Paper 3 Extended **October/November 2015**

1 hour 15 minutes

Candidates answer on the Question Paper.

No Additional Materials are required.

READ THESE INSTRUCTIONS FIRST

Write your Centre number, candidate number and name on all the work you hand in.
Write in dark blue or black pen.
You may use a pencil for any diagrams or graphs.
Do not use staples, paper clips, glue or correction fluid.
DO **NOT** WRITE IN ANY BARCODES.

Answer **all** questions.
Electronic calculators may be used.
You may lose marks if you do not show your working or if you do not use appropriate units.
Take the weight of 1 kg to be 10 N (i.e. acceleration of free fall = 10 m/s^2).

At the end of the examination, fasten all your work securely together.
The number of marks is given in brackets [ ] at the end of each question or part question.

The syllabus is approved for use in England, Wales and Northern Ireland as a Cambridge International Level 1/Level 2 Certificate.

This document consists of **14** printed pages and **2** blank pages.

© UCLES 2015

CAMBRIDGE International Examinations

1 A plastic ball is dropped from the balcony of a tall building and falls towards the ground in a straight line.

Fig. 1.1 is the speed-time graph for the falling ball.

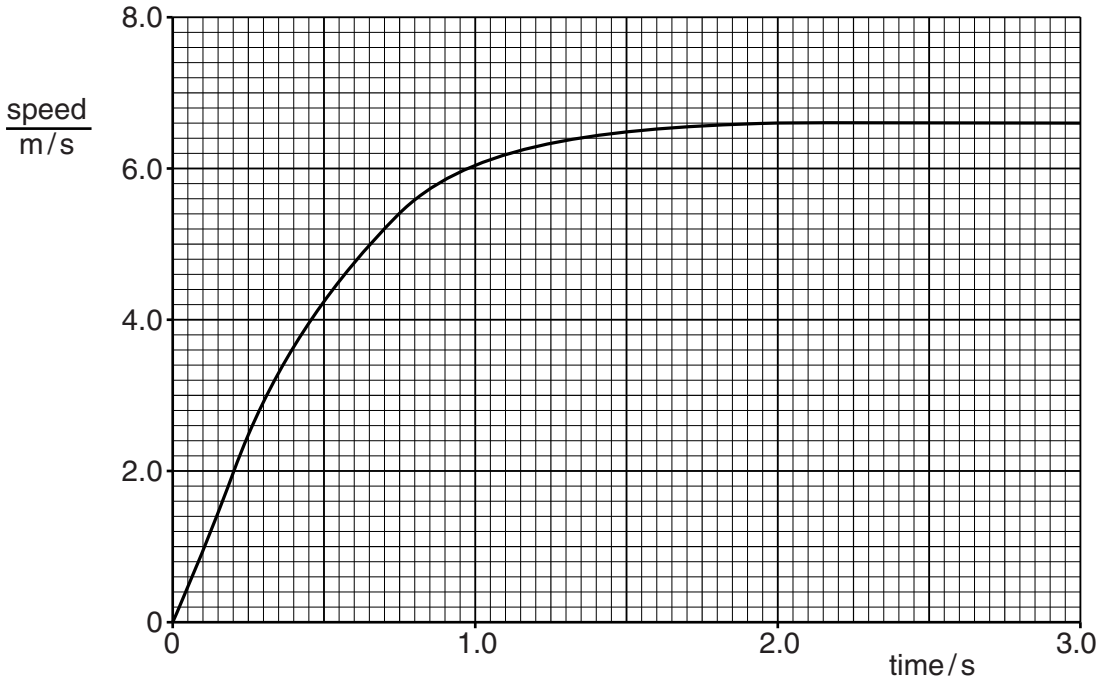

Fig. 1.1

View solution

(a) State and explain, in terms of forces, what is happening to the speed of the ball between time $t = 2.0\,s$ and $t = 3.0\,s$.

.....

.....

.....[2]

(b) On Fig. 1.1, mark a point P on the line where the acceleration of the ball is not constant. [1]

(c) Using Fig. 1.1,

View solution

(i) calculate the acceleration of the ball between $t = 0\,s$ and $t = 0.25\,s$,

acceleration = ...[2]

(ii) estimate the distance that the ball falls in the first 3.0 s.

View solution

distance = ...[2]

[Total: 7]

© UCLES 2015

2 A student has 500 identical, rectangular sheets of paper. The mass of 1.0 m^2 of the paper is 0.080 kg.

(a) Using a metre rule, she measures the length of one sheet of paper and its width. The length is 0.300 m and the width is 0.210 m.

View solution

(i) Calculate the mass of one sheet of paper.

mass = ...[1]

(ii) The student makes a single pile of the 500 sheets of paper.

With a metre rule, she measures the height of the pile. The height of the pile is 0.048 m.

Calculate the density of the paper.

View solution

density = ...[3]

(b) A second student has only 5 sheets of the same type of paper.

Suggest how this student determines the density of the paper to a similar accuracy. Additional apparatus may be used.

.....

.....

.....

.....[2]

[Total: 6]

View solution

3 Fig. 3.1 shows part of the extension-load graph for a spring.

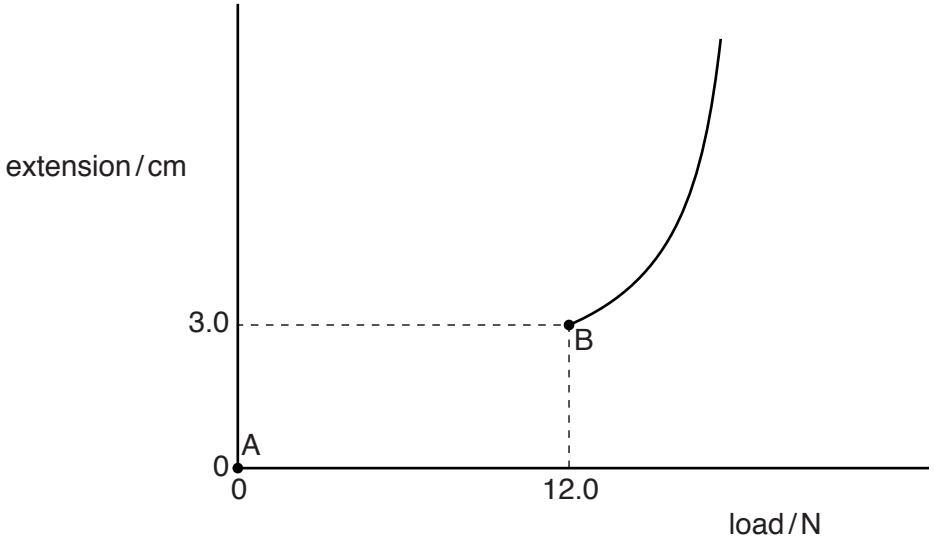

Fig. 3.1

The spring obeys Hooke's law between points A and B.

View solution

(a) (i) On Fig. 3.1, complete the graph between A and B. [1]

View solution

(ii) State the name of point B.

.....[1]

View solution

(b) The average value of the load between A and B is 6.0 N.

Calculate the work done in extending the spring from A to B.

work done = ...[2]

© UCLES 2015

(c) The spring has an unstretched length of 4.0 cm.

View solution

An object is hung on the spring and the spring length increases from 4.0 cm to 6.0 cm.

(i) Calculate the mass of the object.

mass = ...[3]

(ii) The object is immersed in a liquid but remains suspended from the spring.

The liquid exerts an upward force on the object and the length of the spring decreases to 5.0 cm.

Calculate the upward force exerted on the object by the liquid.

View solution

upward force = ...[2]

[Total: 9]

4 A soft rubber ball of mass 0.15 kg is dropped, in a vacuum, from a height of 2.0 m on to a hard surface. The ball then bounces.

(a) State the main energy changes taking place when

View solution

(i) the ball is falling,

.....

(ii) the ball hits the surface and is changing shape,

View solution

.....

(iii) the ball is regaining its shape and is rising from the surface.

View solution

.....

[3]

(b) Calculate the speed with which the ball hits the surface.

View solution

speed = ... [4]

(c) After rebounding from the surface, the ball rises to a height of 1.9 m.

Suggest why the height to which the ball rises is less than the height from which the ball falls.

.....

.....[1]

[Total: 8]

View solution

© UCLES 2015

5 **(a)** State two examples of physical properties that vary with temperature and that may be used for the measurement of temperature.

1. .....

2. .....

[2]

(b) When first manufactured, a liquid-in-glass thermometer has no scale markings.

View solution

(i) Describe the procedure needed to determine

1. the position on the thermometer of the lower fixed point,

.....

.....

.....

2. the position on the thermometer of the upper fixed point.

.....

.....

.....

[3]

(ii) Explain why

1. the graduations marked on the thermometer between the fixed points are spaced equally,

.....

.....[1]

2. the expansion of the glass of the thermometer is ignored.

View solution

.....

.....[1]

[Total: 7]

6 A dolphin produces a sound wave in water of frequency 7800 Hz.

Fig. 6.1 represents rarefactions of the sound wave travelling in the water and hitting the side of a wooden ship at an angle.

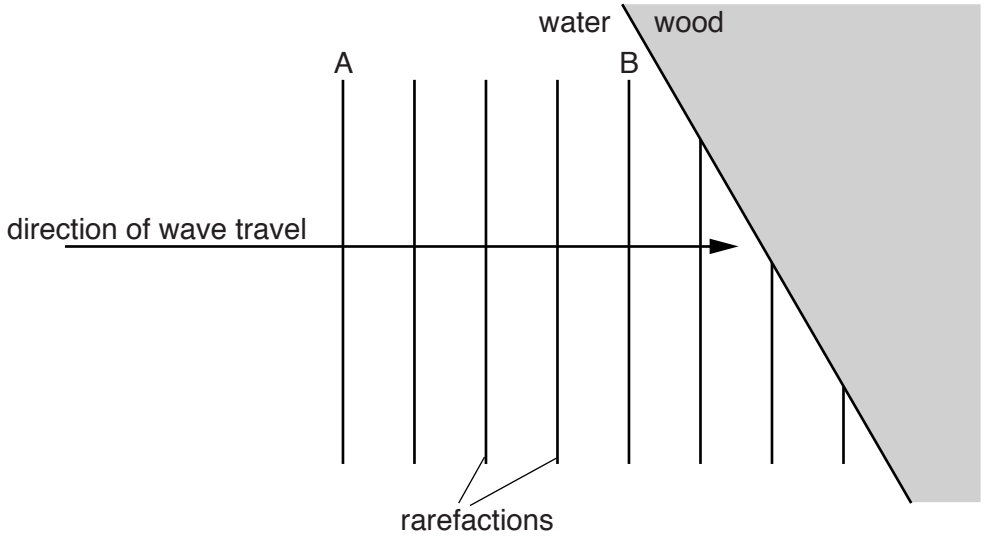

Fig. 6.1

(a) State what is meant by a *rarefaction*.

View solution

.....

.....[1]

(b) On Fig. 6.1, two rarefactions A and B are labelled. The distance between rarefaction A and rarefaction B is 0.76 m.

View solution

Determine

(i) the wavelength in water of the sound wave,

wavelength = ...[1]

(ii) the time taken for the rarefaction at A to reach the point where rarefaction B is now positioned.

View solution

time = ...[2]

(c) The sound wave passes from the water into the wood where the speed of sound is greater.

State what happens to

View solution

(i) the frequency,

.....[1]

(ii) the wavelength.

View solution

.....[1]

(d) On Fig. 6.1, sketch the positions in the wood of the three incomplete rarefactions. [2]

[Total: 8]

View solution

7 **(a)** The refractive index of a type of glass is 1.6.

View solution

Calculate the critical angle for light in this type of glass.

critical angle = ...[3]

(b) A waterproof laser is immersed in water. Fig. 7.1 shows the laser shining light up towards the horizontal surface of the water.

View solution

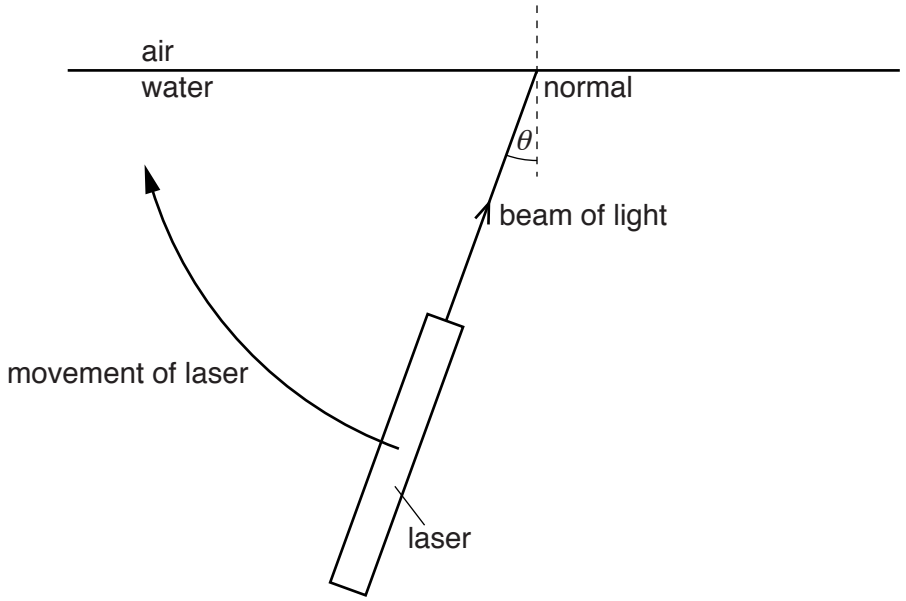

Fig. 7.1

Initially, the angle θ is much less than the critical angle for this light in water.

The laser moves and θ gradually increases until it is much greater than the critical angle.

Describe, for different angles of the laser, what happens to the light beam after it hits the surface.

.....

.....

.....

.....

.....

.....

.....[4]

[Total: 7]

© UCLES 2015

8 A metal sphere, mounted on an insulating plastic stand, is positively charged.

(a) State the name of the unit in which electric charge is measured.

View solution

.....[1]

(b) A smaller metal sphere, also mounted on an insulating plastic stand, is uncharged.

This smaller sphere is moved close to the positively charged sphere. Fig. 8.1 shows the two spheres.

View solution

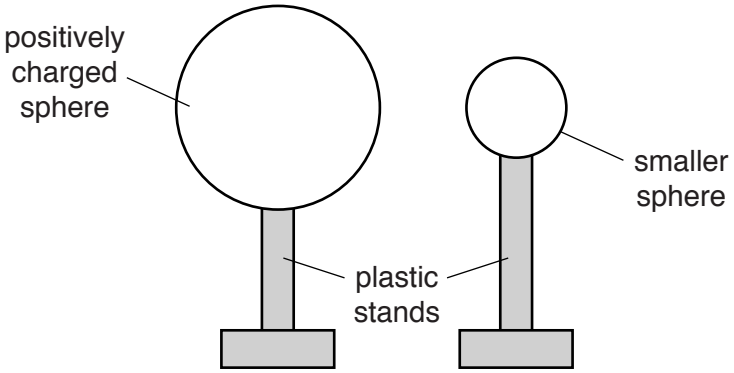

Fig. 8.1

(i) On Fig. 8.1, draw the distribution of charge on the smaller sphere. [2]

(ii) An earthed metal wire is touched against the smaller metal sphere.

View solution

State and explain what happens to the charge on the smaller sphere.

.....

.....

.....[2]

(c) Explain, in terms of their structures, why the metal wire is an electrical conductor but the plastic stand is an electrical insulator.

.....

.....

.....[2]

[Total: 7]

View solution

9 **(a)** Place **one** tick in each row of the table to indicate one use of a thermistor and one use of a transistor.

View solution

	heat detector	light detector	magnetic field detector	rectifier	switch
thermistor					
transistor					

[2]

(b) In Fig. 9.1, lamp A is not glowing brightly.

View solution

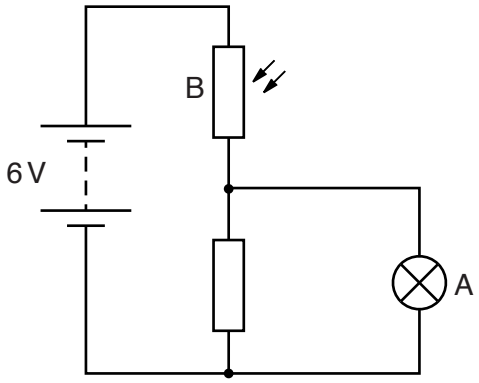

Fig. 9.1

Suggest and explain what could be done to component B to make lamp A glow brightly.

.....

.....

.....

.....

.....

.....[4]

[Total: 6]

© UCLES 2015

10 The output of an a.c. generator in a power station is 5000 V.

A transformer increases the voltage to 115 000 V before the electrical power is transmitted to a distant town.

(a) State and explain, using a relevant equation, one advantage of transmitting electrical power at a high voltage.

.....

.....

.....

.....

.....[3]

(b) The transformer contains two coils, the primary coil and the secondary coil. View solution

(i) State the other main component of a transformer and the material from which it is made.

.....

.....[1]

(ii) State the component in the transformer to which the a.c. generator is connected. View solution

.....

.....[1]

(iii) There are 400 turns on the primary coil of the transformer. View solution

Calculate the number of turns on the secondary coil.

number of turns = ...[2]

(c) Transformers within the town reduce the voltage to 230 V. View solution

Suggest one reason for this.

.....

.....[1]

[Total: 8]

© UCLES 2015

11 Uranium-238 and uranium-234 are radioactive isotopes of the element uranium.

A uranium-238 nucleus is different from a uranium-234 nucleus but both decay by the emission of an α-particle.

(a) (i) In terms of the particles in each, state how a nucleus of uranium-238 differs from a nucleus of uranium-234.

.....

.....[2]

(ii) Although the two nuclei are different, they are both nuclei of uranium.

View solution

State a property that makes these isotopes the same element.

.....

.....[1]

(b) When α-particles pass through air, they are more strongly ionising than β-particles.

View solution

Suggest **two** reasons why this is so.

.....

.....[2]

(c) In an experiment, α-particles are allowed to strike a thin gold foil in a vacuum.

Almost all the α-particles pass straight through the gold undeflected. Only a very small number of α-particles are deflected from their original path.

View solution

This result reveals certain features of the atoms of the gold.

State what is shown about atoms by the fact that

(i) most α-particles pass straight through the gold undeflected,

.....

.....[1]

(ii) some α-particles are deflected back the way they came.

View solution

.....

.....[1]

[Total: 7]

© UCLES 2015

BLANK PAGE

© UCLES 2015

BLANK PAGE

Permission to reproduce items where third-party owned material protected by copyright is included has been sought and cleared where possible. Every reasonable effort has been made by the publisher (UCLES) to trace copyright holders, but if any items requiring clearance have unwittingly been included, the publisher will be pleased to make amends at the earliest possible opportunity.

To avoid the issue of disclosure of answer-related information to candidates, all copyright acknowledgements are reproduced online in the Cambridge International Examinations Copyright Acknowledgements Booklet. This is produced for each series of examinations and is freely available to download at www.cie.org.uk after the live examination series.

Cambridge International Examinations is part of the Cambridge Assessment Group. Cambridge Assessment is the brand name of University of Cambridge Local Examinations Syndicate (UCLES), which is itself a department of the University of Cambridge.