Cambridge IGCSE

Cambridge International Examinations
Cambridge International General Certificate of Secondary Education

CANDIDATE NAME									
CENTRE NUMBER						CANDIDATE NUMBER				

PHYSICS **0625/52**

Paper 5 Practical Test **October/November 2015**

1 hour 15 minutes

Candidates answer on the Question Paper.

Additional Materials: As listed in the Confidential Instructions.

READ THESE INSTRUCTIONS FIRST

Write your Centre number, candidate number and name in the spaces at the top of the page.
Write in dark blue or black pen.
You may use an HB pencil for any diagrams, graphs or rough working.
Do not use staples, paper clips, glue or correction fluid.
DO **NOT** WRITE IN ANY BARCODES.

Answer **all** questions.
Electronic calculators may be used.
You may lose marks if you do not show your working or if you do not use appropriate units.

At the end of the examination, fasten all your work securely together.
The number of marks is given in brackets [ ] at the end of each question or part question.

For Examiner's Use	
1	
2	
3	
4	
Total	

The syllabus is approved for use in England, Wales and Northern Ireland as a Cambridge International Level 1/Level 2 Certificate.

This document consists of **12** printed pages.

© UCLES 2015

CAMBRIDGE International Examinations

1 In this experiment, you will investigate the masses of two loads, **P** and **Q**.

Carry out the following instructions, referring to Fig. 1.1.

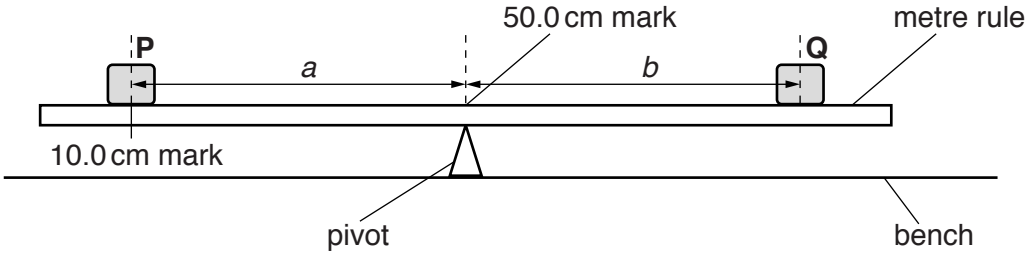

Fig. 1.1

View solution

(a) Place the metre rule on the pivot at the 50.0 cm mark. Place the load **P** on the metre rule at the 10.0 cm mark.

Place the load **Q** on the metre rule and adjust its position so that the metre rule is as near as possible to being balanced.

(i) Measure, and record in Table 1.1, the distance *a* between the centre of load **P** and the 50.0 cm mark.

(ii) Measure, and record in the table, the distance *b* from the 50.0 cm mark to the centre of load **Q**.

(b) Repeat the procedure in **(a)** using distances *a* = 35.0 cm, 30.0 cm, 25.0 cm and 20.0 cm.

View solution

Table 1.1

a/cm	*b*/cm

[2]

(c) Plot a graph of b/cm (y-axis) against a/cm (x-axis).

View solution

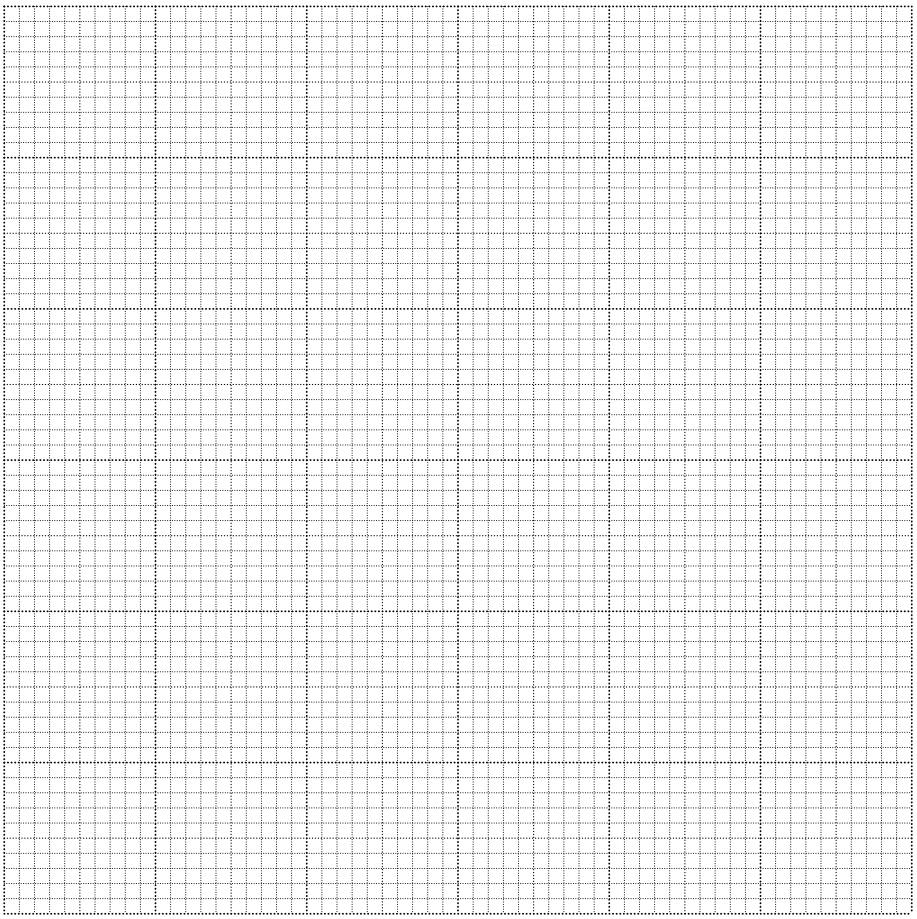

[4]

(d) Determine the gradient G of the graph. Show clearly on the graph how you obtained the necessary information.

View solution

G = ...[2]

(e) The gradient G is the ratio of the masses of the two loads **P** and **Q**.

View solution

Estimate an approximate value for the mass of **P**. Use this, and your value for G, to determine an estimate for the mass of **Q**.

estimated mass of **P** = ...

estimated mass of **Q** = ...
[2]

[Total: 10]

© UCLES 2015

2 In this experiment, you will investigate the cooling of a thermometer bulb.

Carry out the following instructions, referring to Figs. 2.1 and 2.2. You are provided with a beaker labelled **A** containing hot water, a thermometer and a supply of cold water.

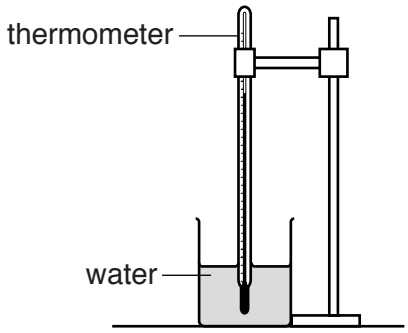

Fig. 2.1

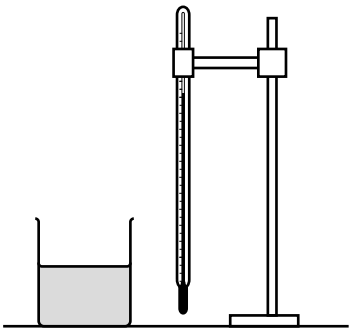

Fig. 2.2

View solution

(a) Place the thermometer in the beaker of hot water labelled **A**. When the thermometer reading stops rising, measure the temperature of the water. In Table 2.1, record this temperature in the θ_1 column at time $t = 0$ s. [1]

(b) Remove the thermometer from the beaker, as shown in Fig. 2.2, immediately start the stopclock and record the temperature θ_1 every 10 s for 1 minute. Record your readings in the table.

View solution

Table 2.1

t/	θ_1/	θ_2/
0		

[3]

(c) Add 100 cm^3 of the cold water supplied to the water in beaker **A**. Replace the thermometer in beaker **A**.

(i) When the thermometer reading stops rising, measure the temperature of the water. Record this temperature in the θ_2 column of the table at time $t = 0$ s. [1]

(ii) Remove the thermometer from the beaker, immediately start the stopclock and record the temperature θ_2 every 10 s for 1 minute. Record the readings in the table.

(iii) Complete the column headings in the table.

View solution

© UCLES 2015

(d) (i) Using the readings in the θ_1 column of the table, calculate the decrease in temperature $\Delta\theta_1$ in 60 s.

View solution

$\Delta\theta_1$ = ...

(ii) Using the readings in the θ_2 column of the table, calculate the decrease in temperature $\Delta\theta_2$ in 60 s.

View solution

$\Delta\theta_2$ = ...

[2]

(iii) State the reason why $\Delta\theta_2$ is less than $\Delta\theta_1$.

View solution

.....

.....[1]

(e) State a precaution that you took when reading the thermometer scale in order to obtain reliable readings.

.....[1]

(f) Suggest **one** reason why other students, carrying out this experiment with care, might obtain values of $\Delta\theta_1$ and $\Delta\theta_2$ different from your values.

.....

.....[1]

[Total: 10]

View solution

© UCLES 2015

3 In this experiment, you will investigate the combined resistance of resistors in series and parallel arrangements.

The circuit shown in Fig. 3.1 has been set up for you.

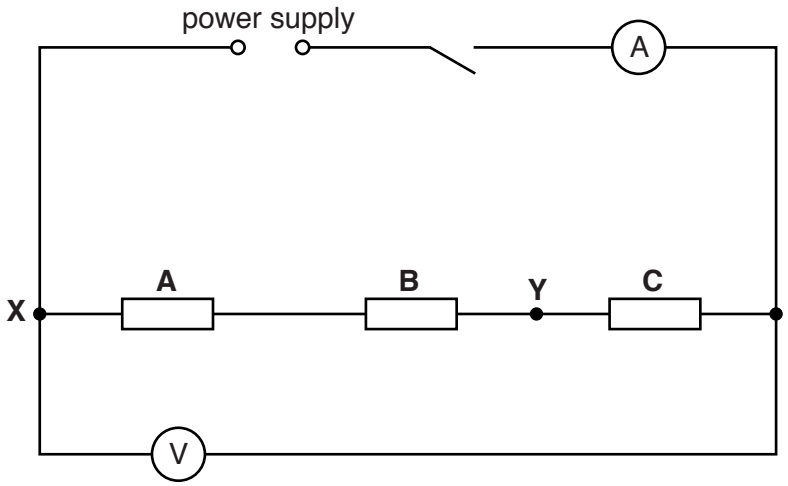

Fig. 3.1

View solution

(a) (i) Switch on. Measure and record the potential difference V_1 across the three resistors, and the current I_1 in the circuit. Switch off.

V_1 = ...

I_1 = ...

[2]

(ii) Calculate the combined resistance R_1 of the resistors, using the equation $R_1 = \frac{V_1}{I_1}$.

View solution

R_1 = ...[1]

(b) The circuit is now to be rearranged.

View solution

- Disconnect resistors **A** and **B**.
- Connect together the resistors **A** and **B** in parallel.
- Connect one side of this parallel combination to the resistor **C** at the point labelled **Y** in Fig. 3.1.
- Connect the other side of the parallel combination to the point labelled **X** in Fig. 3.1.
- Do not make any other changes to the circuit.

On Fig. 3.2, complete the diagram of this new circuit using standard circuit symbols.

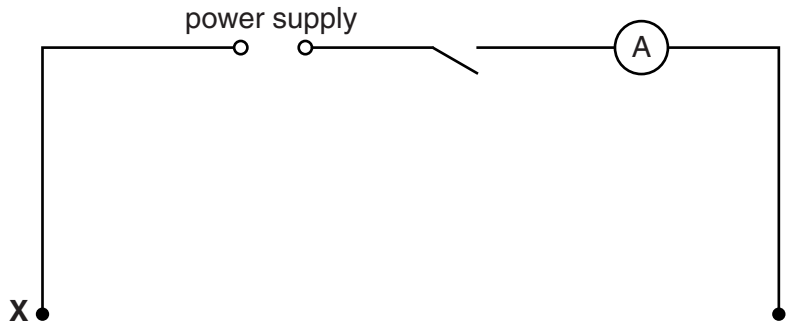

Fig. 3.2

[2]

(c) (i) Switch on. Measure and record the potential difference V_2 across the three resistors, and the current I_2 in the circuit. Switch off.

V_2 = ...

I_2 = ...

[1]

(ii) Calculate the combined resistance R_2 of the resistors using the equation $R_2 = \frac{V_2}{I_2}$.

View solution

R_2 = ...

(iii) Calculate the ratio $\frac{R_1}{R_2}$.

$\frac{R_1}{R_2}$ = ...
[2]

(d) R_1 should equal $2 \times R_2$ when all three resistors are identical.

State whether your results indicate that the resistors are identical. Justify your answer by reference to your results.

statement .....

justification .....

.....

.....
[2]

[Total: 10]

View solution

4 In this experiment, you will investigate reflection using a plane mirror.

Carry out the following instructions, using the separate ray-trace sheet provided. You may refer to Fig. 4.1 for guidance.

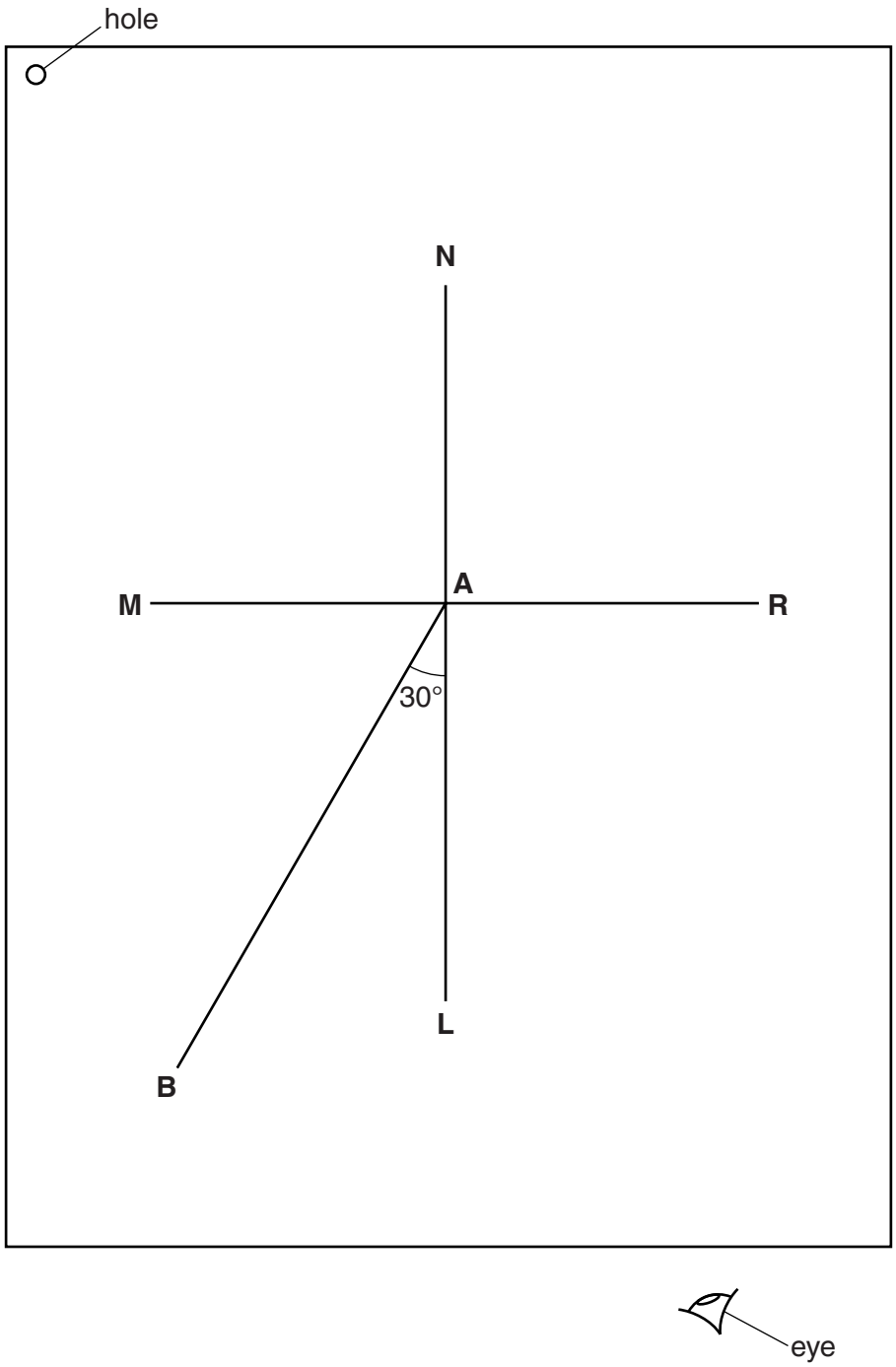

Fig. 4.1

View solution

(a) Draw a line 10.0 cm long near the middle of your ray-trace sheet. Label the line **MR**. Draw a normal to this line that passes through its centre. Label the normal **NL**. Label the point at which **NL** crosses **MR** with the letter **A**.

(b) Draw a line 8.0 cm long from **A** at an angle of incidence $i = 30°$ to the normal, below **MR** and to the left of the normal. Label the end of this line **B**.

© UCLES 2015

(c) Place the reflecting face of the mirror vertically on the line **MR**.

View solution

(d) Place a pin P_1 at point **B**, 8.0 cm from the point **A**.

View solution

(e) Place a pin P_2 on line **AB** a suitable distance from pin P_1.

(f) View the images of pins P_1 and P_2 from the direction indicated by the eye in Fig. 4.1. Place two pins P_3 and P_4, a suitable distance apart, so that pins P_3 and P_4, and the images of P_2 and P_1, all appear exactly one behind the other. Label the positions of P_3 and P_4.

(g) Remove the pins and the mirror. Draw the line joining the positions of P_3 and P_4. Extend the line until it meets **NL**.

(h) Measure, and record in the first row of Table 4.1, the angle *r* between **NL** and the line joining the positions of P_3 and P_4.

View solution

Table 4.1

i/°	*r*/°
30	
30	

[2]

(i) State two precautions that you took with the pins in this experiment in order to obtain reliable readings.

1. .....

.....

2. .....

.....

[2]

View solution

(j) Turn your ray-trace sheet through 180°. Draw a line 8 cm long from **A** at an angle of incidence $i = 30°$ to the normal, below **MR** and to the right of the normal, as shown in Fig. 4.2. Label the end of this line **C**.

View solution

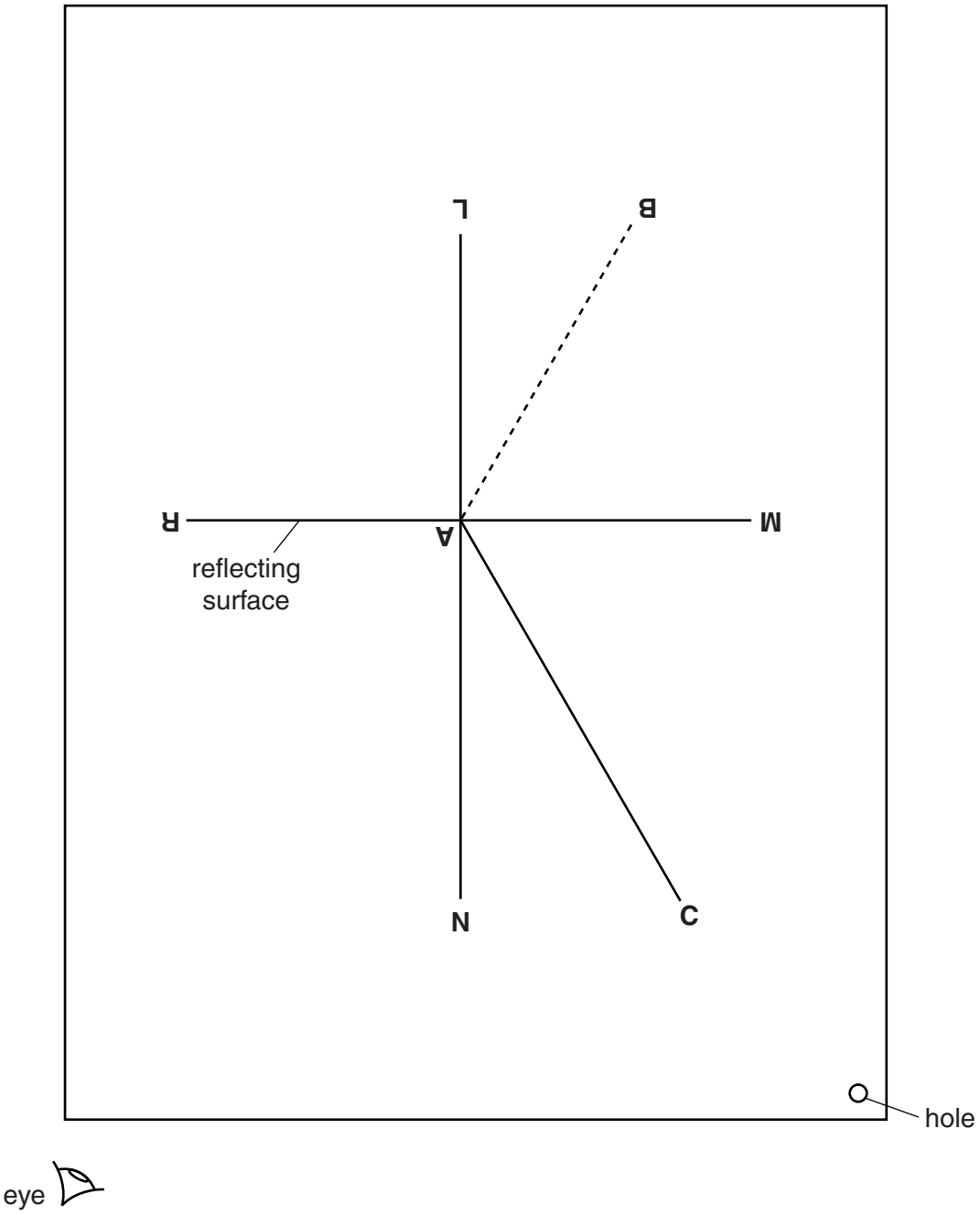

Fig. 4.2

(k) Place the reflecting face of the mirror vertically on the line **MR**, so that it is facing you.

View solution

(l) Repeat the procedure in **(d)** – **(h)** using point **C** and the line **AC**. Record the angle *r* in the second row of Table 4.1.

© UCLES 2015

(m) A student, doing this experiment with care, expected that the results would show all the incident rays and reflected rays meeting at point **A**.

Suggest a practical reason why the lines may not meet exactly at point **A**.

.....

.....[1]

Tie your ray-trace sheet into this Booklet between pages 10 and 11. [5]

[Total: 10]

Permission to reproduce items where third-party owned material protected by copyright is included has been sought and cleared where possible. Every reasonable effort has been made by the publisher (UCLES) to trace copyright holders, but if any items requiring clearance have unwittingly been included, the publisher will be pleased to make amends at the earliest possible opportunity.

To avoid the issue of disclosure of answer-related information to candidates, all copyright acknowledgements are reproduced online in the Cambridge International Examinations Copyright Acknowledgements Booklet. This is produced for each series of examinations and is freely available to download at www.cie.org.uk after the live examination series.

Cambridge International Examinations is part of the Cambridge Assessment Group. Cambridge Assessment is the brand name of University of Cambridge Local Examinations Syndicate (UCLES), which is itself a department of the University of Cambridge.