Cambridge IGCSE

Cambridge International Examinations
Cambridge International General Certificate of Secondary Education

CANDIDATE NAME									
CENTRE NUMBER						CANDIDATE NUMBER			

PHYSICS **0625/61**

Paper 6 Alternative to Practical **October/November 2015**

1 hour

Candidates answer on the Question Paper.

No Additional Materials are required.

READ THESE INSTRUCTIONS FIRST

Write your Centre number, candidate number and name on all the work you hand in.
Write in dark blue or black pen.
You may use an HB pencil for any diagrams or graphs.
Do not use staples, paper clips, glue or correction fluid.
DO **NOT** WRITE IN ANY BARCODES.

Answer **all** questions.
Electronic calculators may be used.
You may lose marks if you do not show your working or if you do not use appropriate units.

At the end of the examination, fasten all your work securely together.
The number of marks is given in brackets [ ] at the end of each question or part question.

The syllabus is approved for use in England, Wales and Northern Ireland as a Cambridge International Level 1/Level 2 Certificate.

This document consists of **12** printed pages.

© UCLES 2015

CAMBRIDGE International Examinations

1 The class is investigating two different types of pendulum.

Figs. 1.1 and 1.2 show the apparatus used.

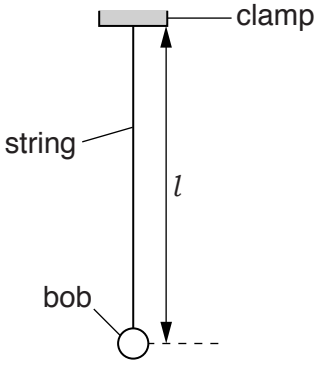

Fig. 1.1

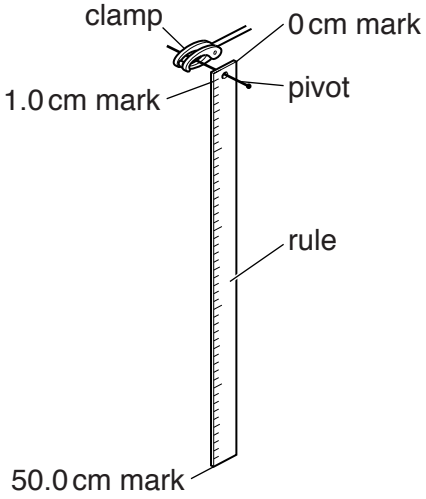

Fig. 1.2

(a) (i) On Fig. 1.1, measure the length l of the pendulum.

View solution

l = ...[1]

(ii) Explain briefly how you would measure the length l of a pendulum, of the type shown in Fig. 1.1, as accurately as possible.

.....

.....[1]

(b) A student adjusts the length l of the pendulum shown in Fig. 1.1 to be exactly 50.0 cm. She displaces the pendulum bob slightly and releases it so that it swings. She measures the time t_S for 20 complete oscillations of the pendulum.

View solution

(i) Record the time t_S as shown in Fig. 1.3.



Fig. 1.3

t_S = ...[1]

(ii) Calculate the period T_S of the pendulum. The period is the time for one complete oscillation.

T_S = ...[1]

© UCLES 2015

(iii) Explain why measuring the time for 20 oscillations, rather than for 1 oscillation, gives a more accurate value for T_S.

.....

.....

.....[1]

(c) The pendulum shown in Fig. 1.2 is a 50.0 cm rule. The student displaces this pendulum slightly and releases it so that it swings. She measures the time t_C for 20 complete oscillations of the pendulum.

t_C = 23.2 s

(i) State a precaution that you would take to ensure that the measurement of time t_C is reliable.

.....

(ii) Calculate the period T_C of the pendulum. The period is the time for one complete oscillation.

View solution

T_C = ...

[1]

(d) A student suggests that T_C should be equal to T_S. View solution

State whether the results support this suggestion. Justify your answer by reference to the results.

statement .....

justification .....

.....

.....

[2]

(e) Assume that the length l of the first pendulum has been measured accurately at 50.0 cm and that the length of the strip that forms the second pendulum is exactly 50.0 cm long.

Suggest why it may not be correct to state that both pendulums have the same length l = 50.0 cm.

.....

.....[1]

View solution [Total: 9]

© UCLES 2015

2 The class is determining the resistance of a resistor.

Fig. 2.1 shows the circuit.

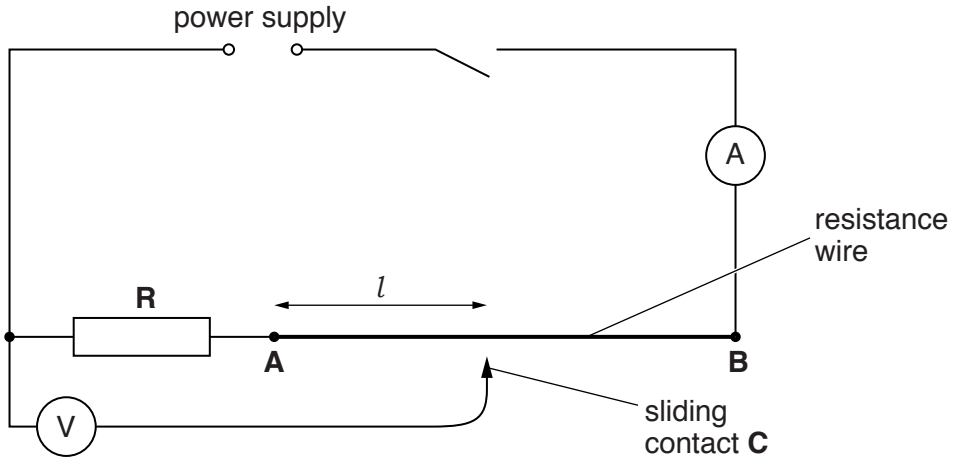

Fig. 2.1

(a) A student places the sliding contact **C** at a distance l from end **A** of the resistance wire. She records the reading on the voltmeter.

(i) Read the meter shown in Fig. 2.2. Record, in Table 2.1, this value of V for length $l = 100\,\text{cm}$.

View solution

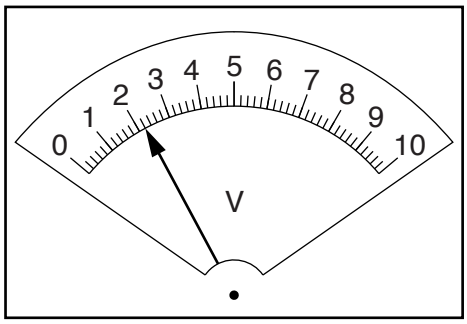

Fig. 2.2

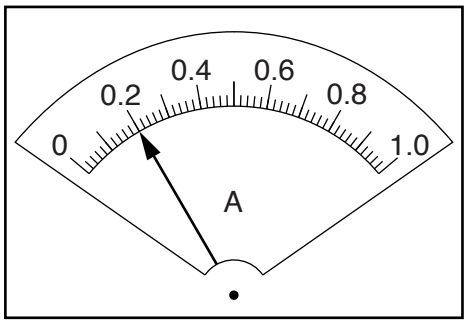

Fig. 2.3

Table 2.1

l/cm	V/V
20.0	1.1
40.0	1.4
60.0	1.6
80.0	1.9
100.0	

[1]

(ii) Read the meter shown in Fig. 2.3. Record this current I.

I = ...[1]

(b) Plot a graph of V/V (y-axis) against l/cm (x-axis). Start both axes at the origin (0, 0).

View solution

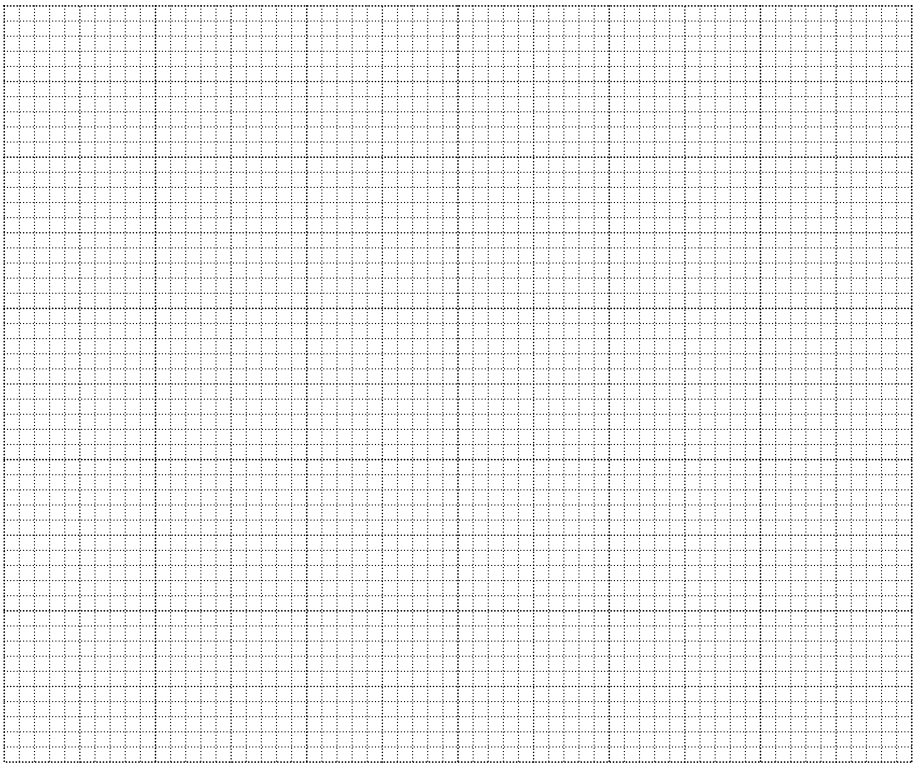

[4]

(c) **(i)** Determine the value of the intercept Y on the y-axis.

View solution

Y = ...[1]

(ii) Calculate the ratio $\frac{Y}{I}$. The value of I is your answer to part **(a)(ii)**.

View solution

$\frac{Y}{I}$ = ...

(iii) $\frac{Y}{I}$ is numerically equal to the resistance R of the resistor **R**.

View solution

Write down a value for R to a suitable number of significant figures for this experiment. Include the unit.

R = ...
[2]

[Total: 9]

© UCLES 2015

3 The class is investigating reflection using a plane mirror.

Fig. 3.1. shows a student's ray-trace sheet.

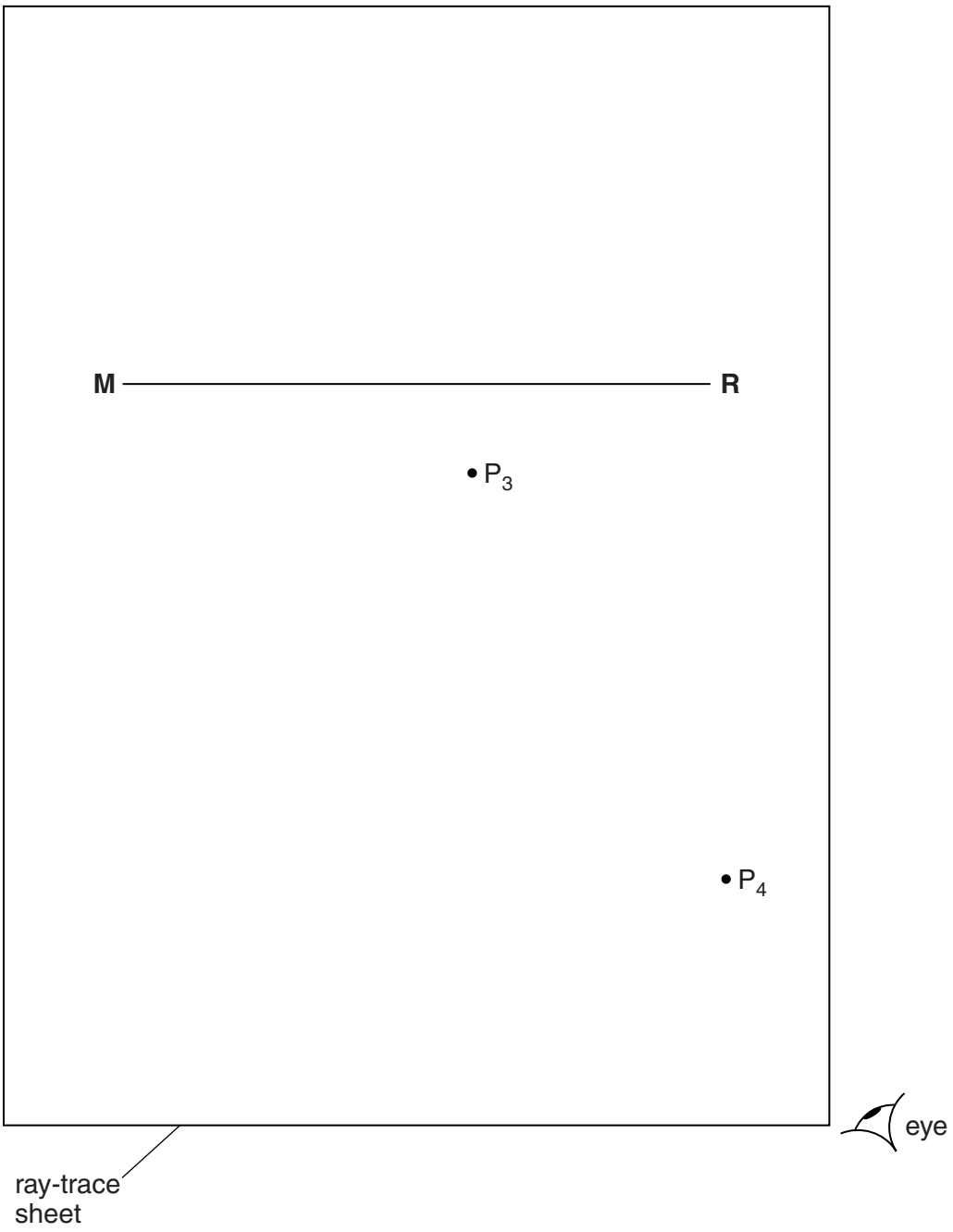

Fig. 3.1

(a) The student draws the line **MR** to mark the position of a plane mirror.

(i) Draw a normal to this line that passes through its centre. Label the normal **NL**. Label the point at which **NL** crosses **MR** with the letter **A**.

(ii) Draw a line 8.0 cm long from **A** at an angle of incidence $i = 30°$ to the normal, below **MR** and to the left of the normal. Label the end of this line **B**.

View solution [3]

(b) The student places a pin P_1 at point **B**. He places a second pin P_2 on line **AB**. View solution

Label a position **X** on line **AB** to show a suitable position for pin P_2. [1]

(c) He views the images of pins P_1 and P_2 from the direction indicated by the eye in Fig. 3.1. He places two pins P_3 and P_4, a suitable distance apart, so that pins P_3 and P_4, and the images of P_2 and P_1, all appear exactly one behind the other. The positions of P_3 and P_4 are shown in Fig. 3.1.

(i) Draw the line joining the positions of P_3 and P_4. Extend the line until it meets **NL**.

View solution

(ii) Measure the angle r between **NL** and the line joining the positions of P_3 and P_4.

$r =$ .....
[2]

(d) State two precautions that you would take in this experiment in order to obtain reliable readings.

1. .....

.....

2. .....

.....
[2]

(e) A student has done this experiment very carefully, taking these precautions.

She is disappointed to find that her line for the reflected ray is not exactly where she predicts from the theory.

Suggest a practical reason for this.

View solution

.....

.....[1]

[Total: 9]

4 The class is investigating the cooling of water.

Fig. 4.1 shows the apparatus used.

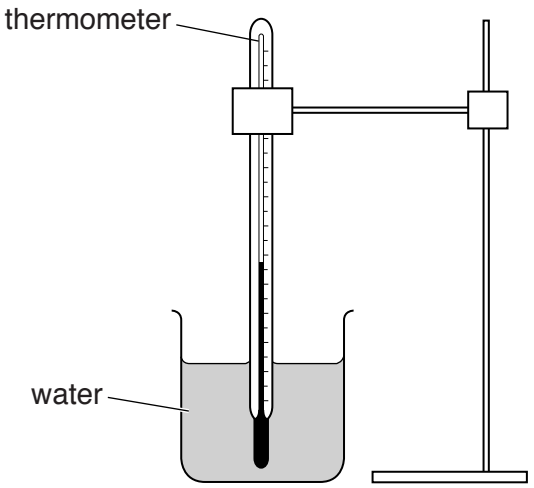

Fig. 4.1

(a) Record the temperature θ_C of the cold water shown on the thermometer in Fig. 4.2.

View solution

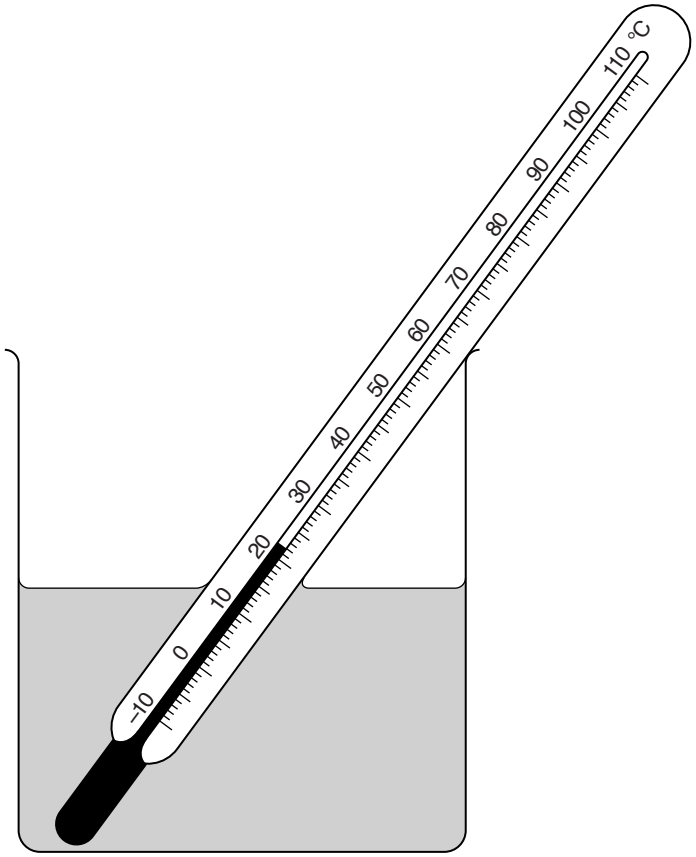

Fig. 4.2

θ_C = ...[1]

(b) A student pours 100 cm^3 of hot water into a beaker. He records the temperature θ_H of the hot water in the beaker.

View solution

θ_H = 83 °C

State one precaution that you would take to ensure that the temperature reading is as reliable as possible.

.....

.....[1]

(c) The student adds 100 cm^3 of cold water to the hot water in the beaker. He records the temperature θ_M of the mixture.

θ_M = 46 °C

Calculate the average temperature θ_A of the hot water and the cold water using the equation $\theta_A = \frac{(\theta_H + \theta_C)}{2}$.

View solution

θ_A = ...
[1]

(d) The student carried out this experiment carefully.

He was expecting that the temperature θ_M of the mixture would be the same as the average temperature θ_A of the hot water and the cold water.

Suggest two factors that could cause θ_M and θ_A to be different.

View solution

1. .....

.....

2. .....

.....
[2]

© UCLES 2015

(e) Fig. 4.3 shows a measuring cylinder.

View solution

Three students take the volume reading. Their readings are:

- Student 1: 80 cm^3
- Student 2: 79 cm^3
- Student 3: 78 cm^3

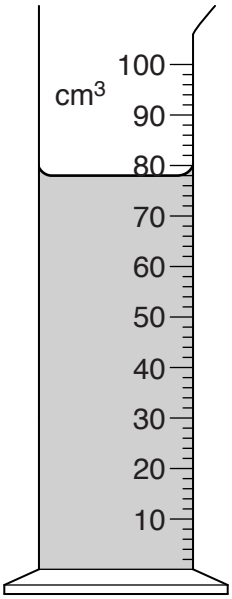

Fig. 4.3

(i) State the correct reading.

correct reading = ...

(ii) Explain briefly the mistake made by **one** of the other students.

View solution

Student ..... is incorrect, because .....

.....

[2]

[Total: 7]

5 The class is doing a lens experiment.

Fig. 5.1 shows some of the apparatus used.

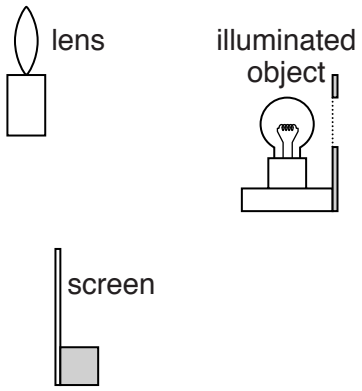

Fig. 5.1

(a) Draw a diagram to show how the apparatus shown in Fig. 5.1 is arranged for an experiment to determine the focal length of the lens. The laboratory bench is drawn for you.

View solution



[2]

(b) The focal length of the lens is known to be approximately 15 cm.

View solution

Suggest a suitable distance *d* between the illuminated object and the screen so that a well-focused image can be seen on the screen.

d = ... cm [1]

(c) Suggest two practical difficulties that may cause inaccuracy in the value of focal length obtained.

1. .....

.....

2. .....

.....

[2]

View solution

(d) Fig. 5.2 shows the shape of the illuminated object.

View solution

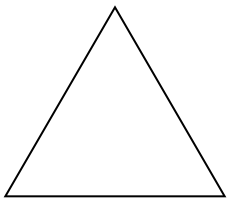

Fig. 5.2

In the space below, draw a diagram to show the focused image that you would expect to see on the screen. [1]

[Total: 6]

Permission to reproduce items where third-party owned material protected by copyright is included has been sought and cleared where possible. Every reasonable effort has been made by the publisher (UCLES) to trace copyright holders, but if any items requiring clearance have unwittingly been included, the publisher will be pleased to make amends at the earliest possible opportunity.

To avoid the issue of disclosure of answer-related information to candidates, all copyright acknowledgements are reproduced online in the Cambridge International Examinations Copyright Acknowledgements Booklet. This is produced for each series of examinations and is freely available to download at www.cie.org.uk after the live examination series.

Cambridge International Examinations is part of the Cambridge Assessment Group. Cambridge Assessment is the brand name of University of Cambridge Local Examinations Syndicate (UCLES), which is itself a department of the University of Cambridge.