Cambridge IGCSE

Cambridge International Examinations
Cambridge International General Certificate of Secondary Education

CANDIDATE NAME									
CENTRE NUMBER						CANDIDATE NUMBER			

PHYSICS **0625/63**

Paper 6 Alternative to Practical **October/November 2015**

1 hour

Candidates answer on the Question Paper.

No Additional Materials are required.

READ THESE INSTRUCTIONS FIRST

Write your Centre number, candidate number and name on all the work you hand in.
Write in dark blue or black pen.
You may use an HB pencil for any diagrams or graphs.
Do not use staples, paper clips, glue or correction fluid.
DO **NOT** WRITE IN ANY BARCODES.

Answer **all** questions.
Electronic calculators may be used.
You may lose marks if you do not show your working or if you do not use appropriate units.

At the end of the examination, fasten all your work securely together.
The number of marks is given in brackets [ ] at the end of each question or part question.

The syllabus is approved for use in England, Wales and Northern Ireland as a Cambridge International Level 1/Level 2 Certificate.

This document consists of **17** printed pages and **3** blank pages.

© UCLES 2015

CAMBRIDGE International Examinations

1 A student is investigating the transfer of thermal energy.

He uses the apparatus shown in Fig. 1.1.

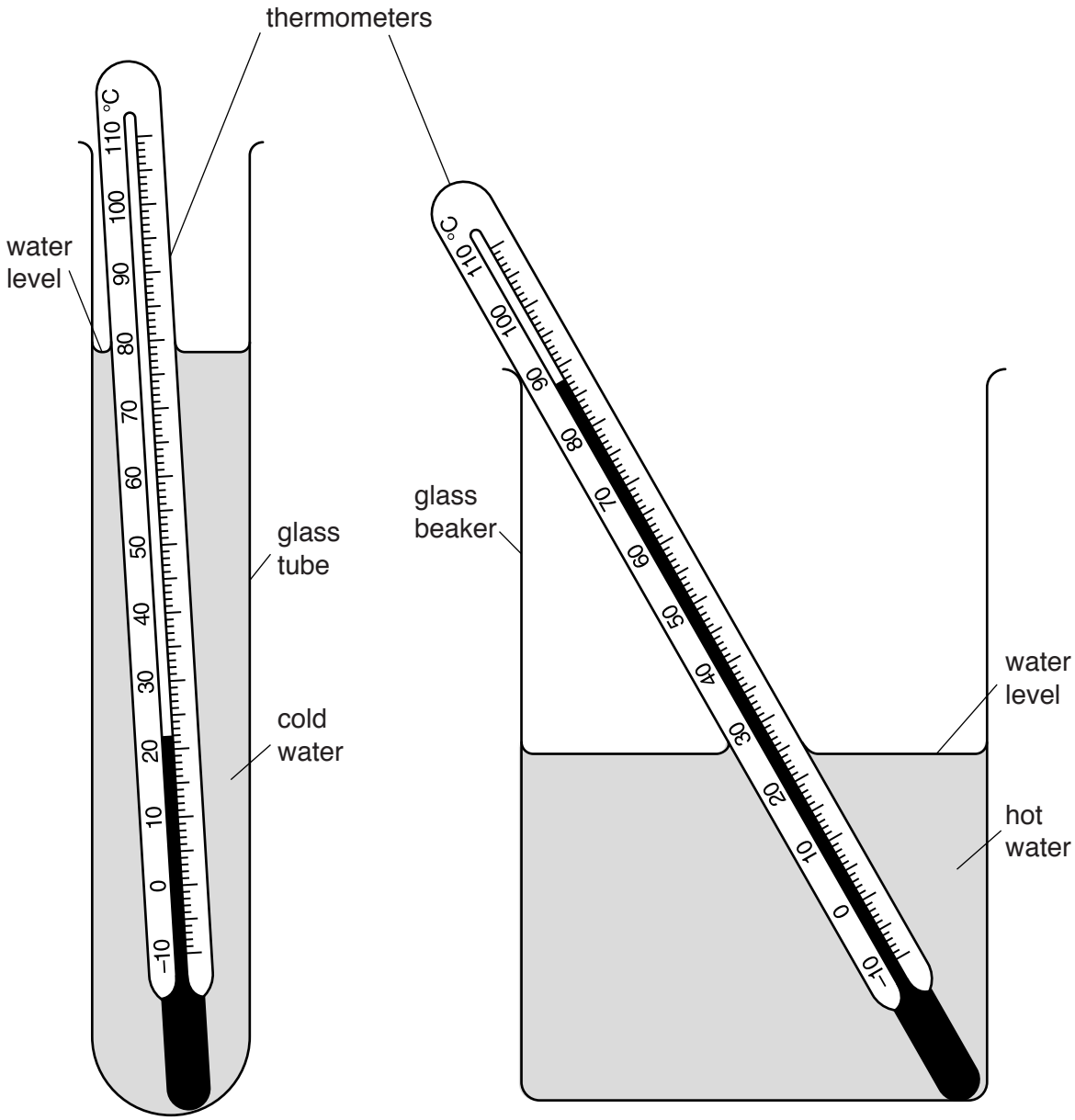

Fig. 1.1

(a) The student pours 50 cm^3 of cold water into the glass tube and 300 cm^3 of hot water into the beaker. The water levels are approximately as shown in Fig. 1.1.

In Table 1.1, record the temperatures θ_C of the cold water and θ_H of the hot water as shown on the thermometers in Fig. 1.1. [1]

View solution

Table 1.1

	tube with 50 cm^3 of cold water		tube with 25 cm^3 of cold water	
t/	θ_C/	θ_H/	θ_C/	θ_H/
0			20.0	87.0
30	33.0	82.0	34.0	82.0
60	40.5	79.0	49.0	79.5
90	49.0	78.0	59.5	76.0
120	56.0	76.0	65.5	75.0
150	60.0	75.0	69.5	74.5
180	63.0	74.0	72.0	74.0

(b) The student lowers the glass tube into the beaker of hot water and immediately starts a stopclock.

Table 1.1 shows the readings of the temperature θ_C of the cold water and the temperature θ_H of the hot water at times t = 30 s, 60 s, 90 s, 120 s, 150 s and 180 s.

The student repeats the procedure with the same volume of hot water in the beaker but with 25 cm^3 of cold water in the glass tube. The results are shown in the table.

View solution 

Complete the column headings in the table. [1]

(c) Write a conclusion stating how the volume of cold water in the tube affects its temperature rise.

.....

.....

.....[1]

(d) Another student wishes to check the conclusion by repeating the experiment with 12.5 cm^3 of cold water.

Suggest two conditions which he should keep the same so that the comparison will be fair.

1. .....

.....

2. .....

.....

[2]

View solution 

(e) Scientists in an industrial laboratory wish to use this experiment as a model of a heat exchanger, which transfers thermal energy between liquids.

Suggest **two** different improvements to the apparatus which would make the heating of the cold water more efficient.



For your **first** suggestion, explain why it would be an improvement.

suggestion 1 .....

explanation .....

.....

suggestion 2 .....

[3]

[Total: 8]

2 The class is investigating the behaviour of a spring, and then using the spring to determine the weight of an object.

The apparatus is shown in Fig. 2.1.

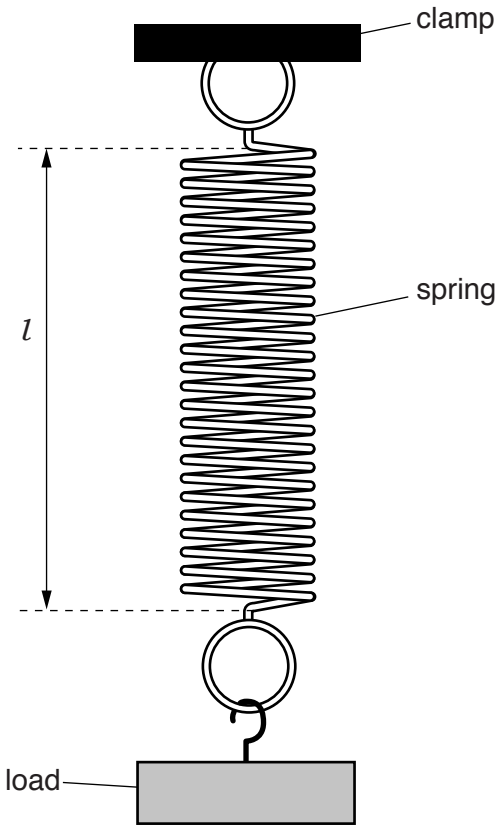

Fig. 2.1

(a) A load of weight L = 1.0 N is hung on the spring. The stretched length l of the spring, as indicated in Fig. 2.1, is recorded in Table 2.1.

Suggest a precaution that you would take when measuring the length of the spring, to ensure a reliable reading. You may draw a diagram.

View solution

.....

.....[1]

(b) Step **(a)** is repeated for values of L = 2.0 N, 3.0 N, 4.0 N and 5.0 N. The readings are shown in Table 2.1.

View solution

Table 2.1

L/N	l/cm
1.0	6.1
2.0	9.0
3.0	13.4
4.0	16.8
5.0	21.0

Plot a graph of l/cm (y-axis) against L/N (x-axis).

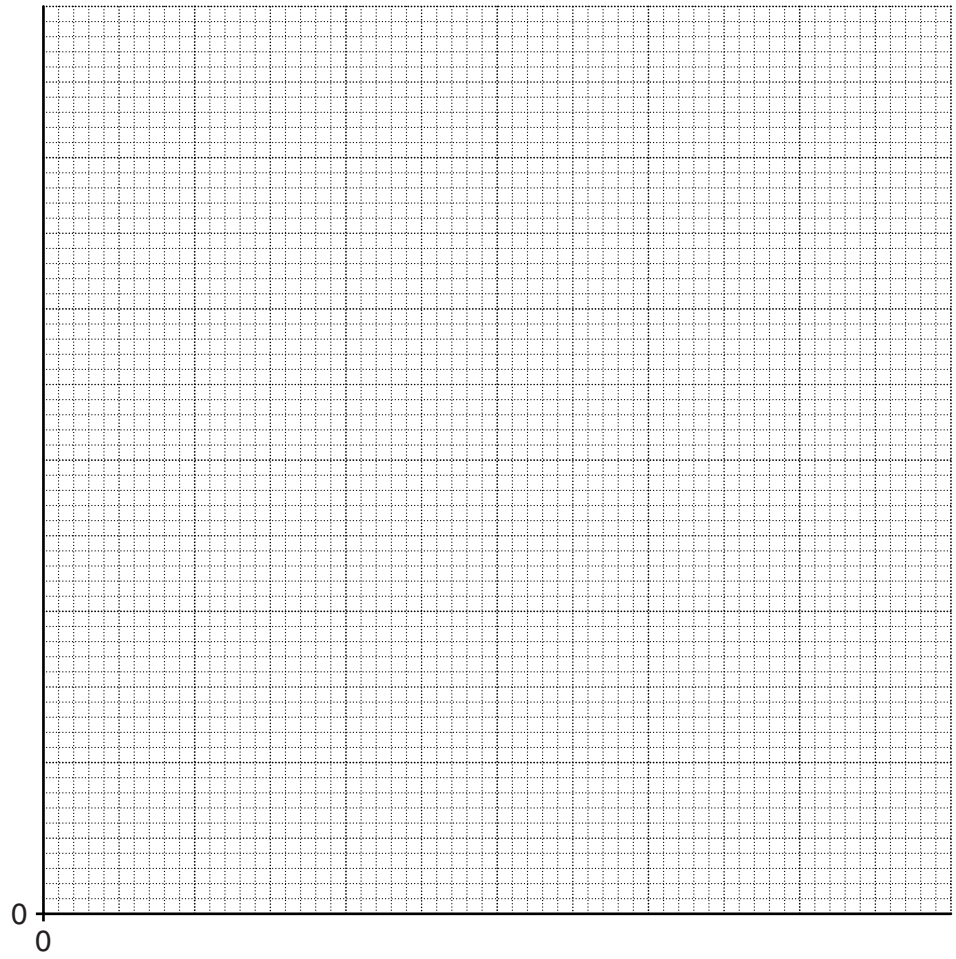

[4]

(c) Use your graph to determine the length l_0 of the spring with no load attached.

View solution

l_0 = ...[1]

© UCLES 2015

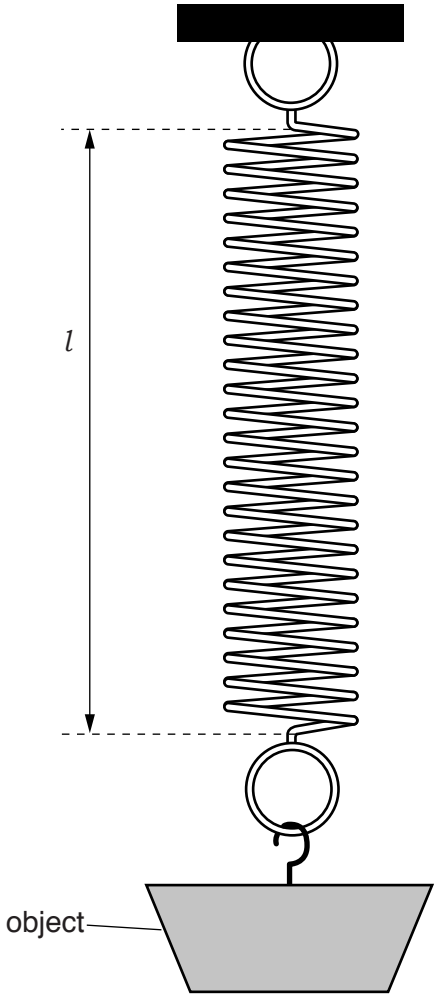

Fig. 2.2

(d) The loads are removed and an object is suspended from the spring, as shown in Fig. 2.2.

View solution

(i) On Fig. 2.2, measure the stretched length l of the spring.

l = ...[1]

(ii) Use the graph, and your reading from **(d)(i)**, to determine the weight W of the object. Show clearly on the graph how you obtained your answer.

W = ... N
[2]

(e) A student measures the weight of a different load using this same method. He gives the weight as 2.564 N.

Explain why this is not a suitable number of significant figures for this experiment.

View solution

.....

.....

.....[1]

[Total: 10]

© UCLES 2015

3 Some students are carrying out experiments on a model wind turbine.

Some of their apparatus is shown in Fig. 3.1.

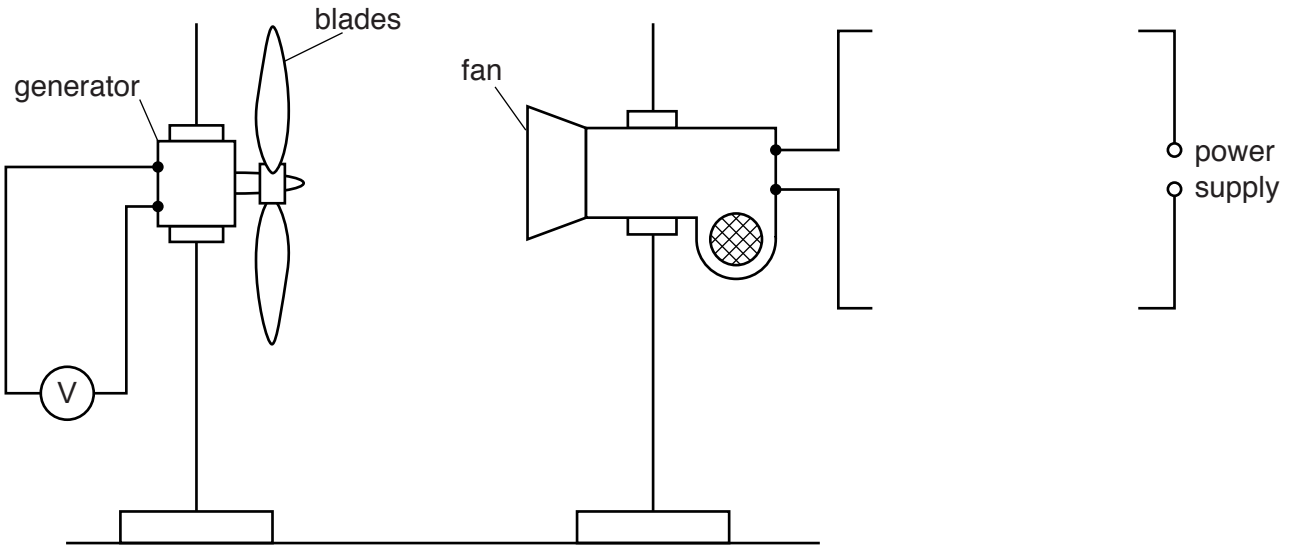

Fig. 3.1

The turbine blades have been cut from cardboard. An electric fan is used to make the blades rotate. When they rotate, they turn a small generator.

(a) One student is studying the effect of changing the electric current in the fan.

View solution

(i) Using standard symbols, complete the circuit in Fig. 3.1 to show a variable resistor and an ammeter connected for this purpose. [2]

(ii) The student is carrying out the investigation over a number of days.

View solution

Suggest a variable that he must keep constant in each of his tests.

.....

.....[1]

(b) Other students wish to test different aspects of the model wind turbine.

Suggest two variables, other than that already mentioned in **(a)(ii)**, which they could change and which would affect the output of the generator.

1. .....

.....

2. .....

.....

[2]

[Total: 5]

View solution

4 The class is studying the resistance of identical wires connected in parallel.

The circuit is set up as shown in Fig. 4.1, with a crocodile clip connected to the right-hand end of wire **A**.

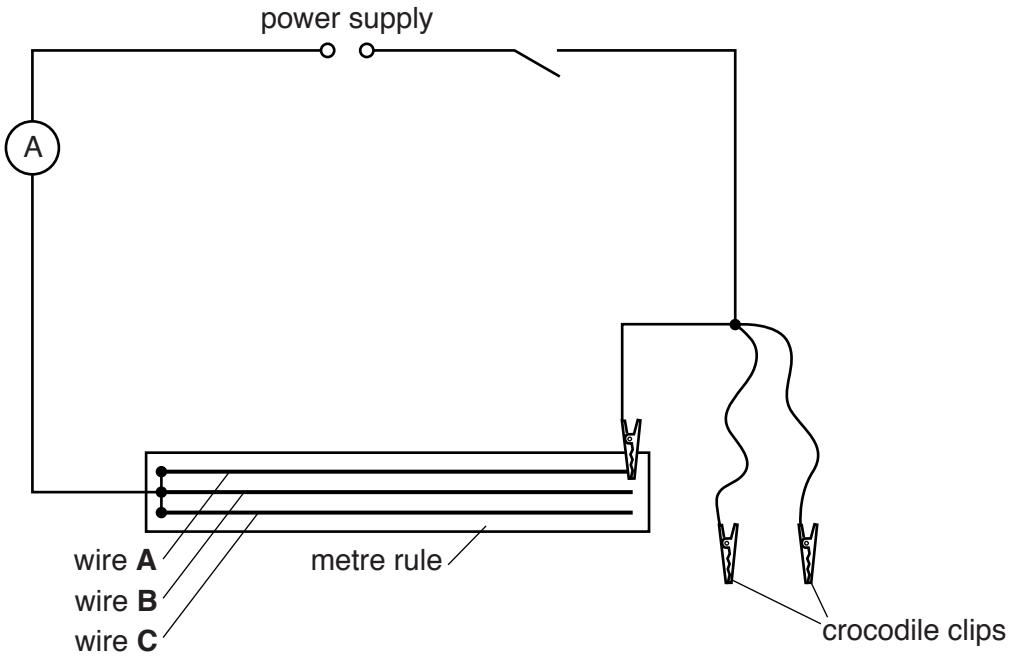

Fig. 4.1

View solution

(a) On Fig. 4.1, use the appropriate symbol to show a voltmeter connected to measure the potential difference across wire **A**. [1]

(b) In Table 4.1, write down the potential difference V and the current I for wire **A** as shown in Figs. 4.2 and 4.3.

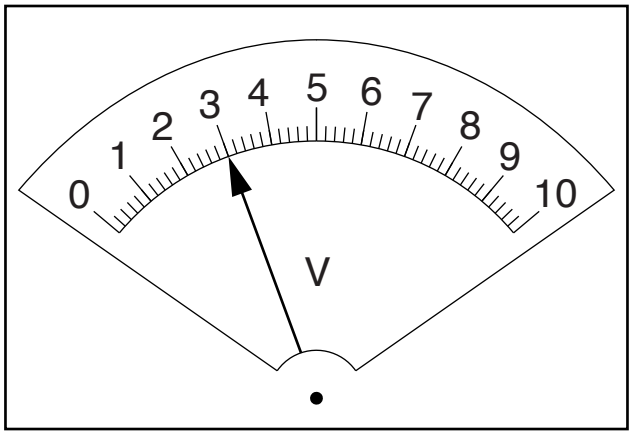

Fig. 4.2

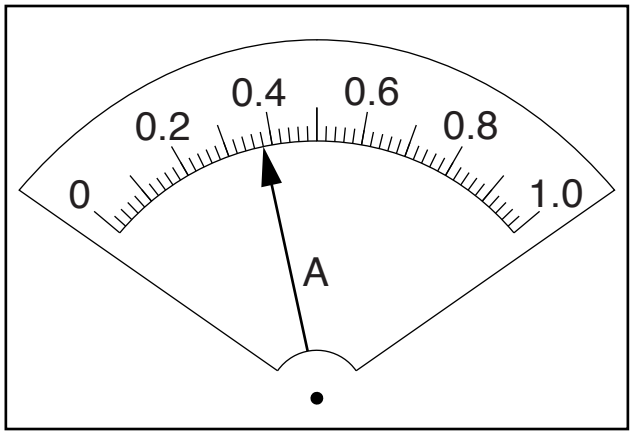

Fig. 4.3

View solution

Table 4.1

wire combination	V/V	I/A
A only		
A and **B** in parallel	2.9	0.77
A, **B** and **C** in parallel	2.6	0.98

[1]

(c) The other crocodile clips are used, first to connect wires **A** and **B** in parallel, and then wires **A**, **B** and **C** in parallel. The readings for each circuit are shown in Table 4.1.

On Figs. 4.4 and 4.5, draw arrows to show the meter readings for the circuit in which wires **A** and **B** are connected in parallel.

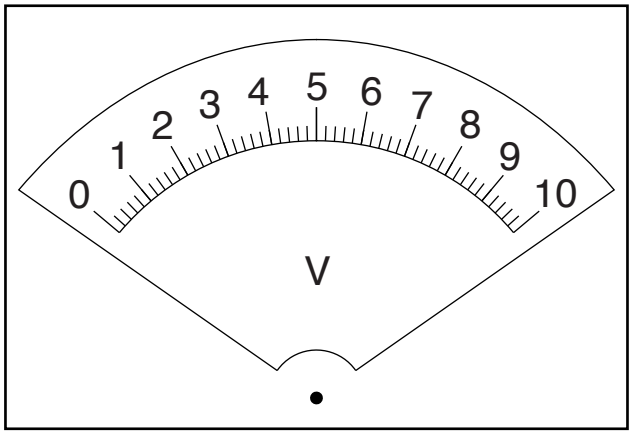

Fig. 4.4

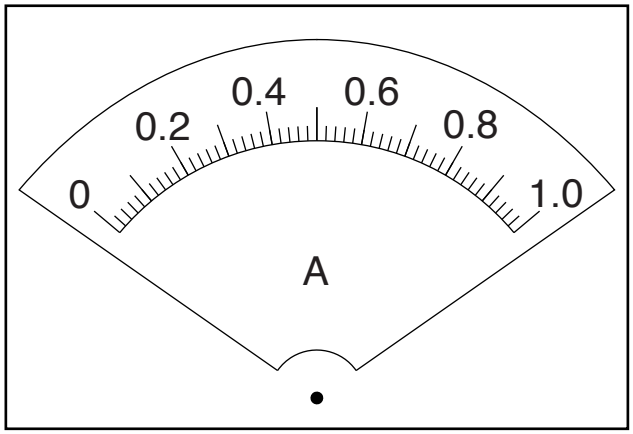

Fig. 4.5

View solution

[1]

(d) Calculate, and record below, the resistance R of each wire combination, using the equation $R = \frac{V}{I}$.

View solution

resistance of wire **A** R_1 = ...

resistance of wires **A** and **B** in parallel R_2 = ...

resistance of wires **A**, **B** and **C** in parallel R_3 = ...

[3]

© UCLES 2015

(e) (i) A student suggests that when 2 identical wires are connected in parallel, their resistance should be equal to 1/2 of the resistance of a single wire.

View solution

State whether your findings agree with this suggestion.

Justify your answer by reference to your results, giving values to support your justification.

statement .....

.....

justification .....

.....

[2]

(ii) Use your results to suggest the relationship that should exist between R_3 and R_1.

View solution

.....

.....[1]

[Total: 9]

Turn over for question 5.

5 A student is investigating the refraction of light in a transparent block. Her ray-trace will be used to determine a quantity known as the refractive index of the material of the block.

Fig. 5.1 shows her ray-trace sheet.

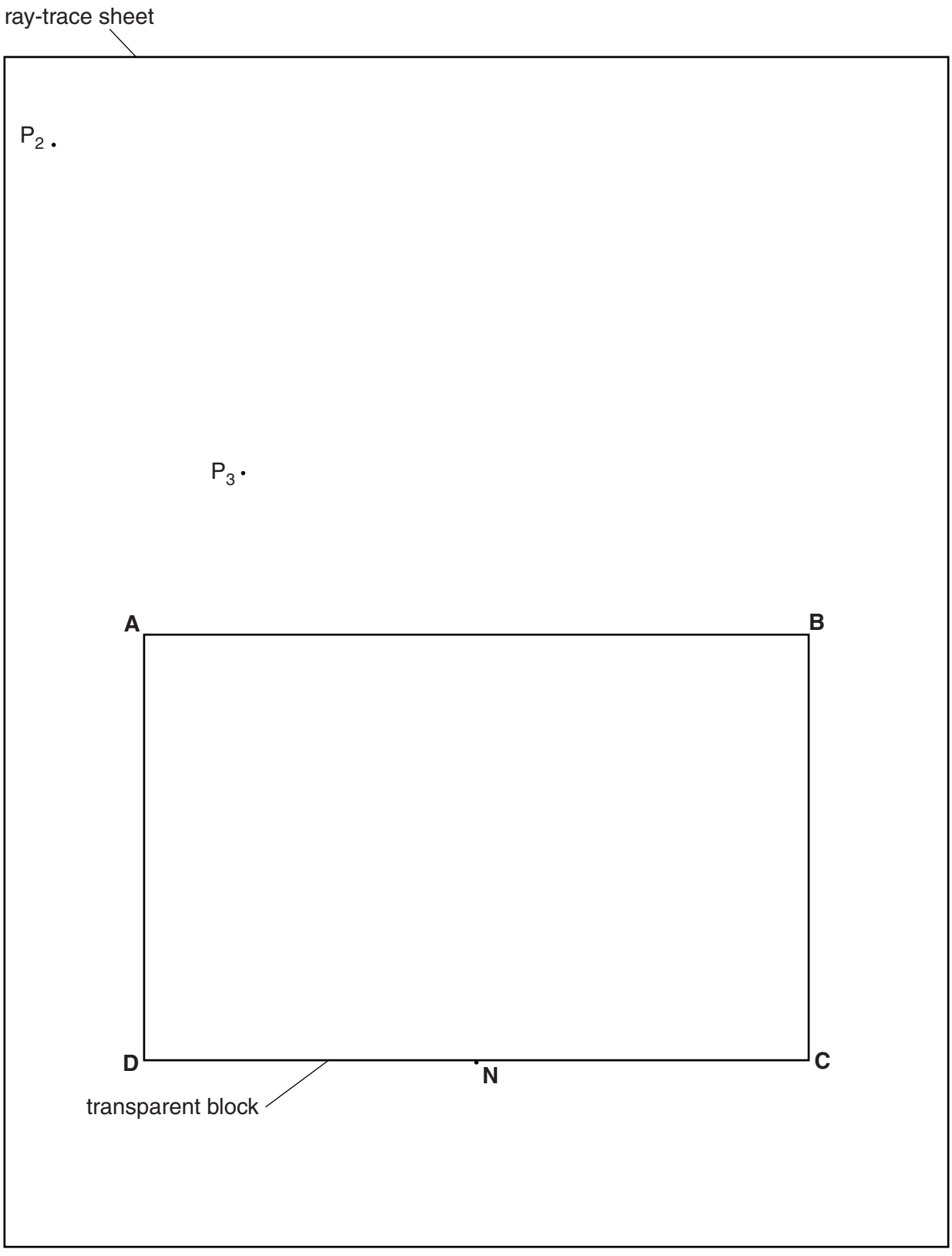

Fig. 5.1

The student draws the outline **ABCD** of the transparent block.

(a) Draw a normal to the line **DC** through point **N**. Extend the normal beyond line **AB**.

View solution

Label the upper end of the normal with the letter **L**. Label the point at which **NL** crosses **AB** with the letter **E**. [1]

(b) The student places a pin P_1 against the block at point **N** and views the image of P_1 through the side **AB** of the block.

She places two pins P_2 and P_3, as shown in Fig. 5.1, so that pins P_2 and P_3, and the image of P_1, all appear exactly one behind the other.

(i) Draw a line joining the positions of P_2 and P_3. Extend this line until it crosses **NL**. Label the point at which the line crosses **NL** with the letter **F**. [1]

(ii) Measure the length *a* of line **EN**.

View solution

a = ...

(iii) Measure the length *b* of line **EF**.

b = ...

[2]

(c) Calculate a value *n* for the refractive index of the block, using your values from **(b)(ii)** and **(b)(iii)** and the equation $n = \frac{a}{b}$.

View solution

n = ...[1]

(d) Suggest a practical precaution that you would take to ensure a reliable result in this type of experiment.

.....

.....[1]

View solution

Question 5 continues on the next page.

© UCLES 2015

(e) The student obtains a second value for the refractive index *n* by repeating the experiment with the block standing on edge, as shown in Fig. 5.2.

She views the image of P_1 from the direction indicated by the arrow. The block is 1.5 cm thick.

View solution

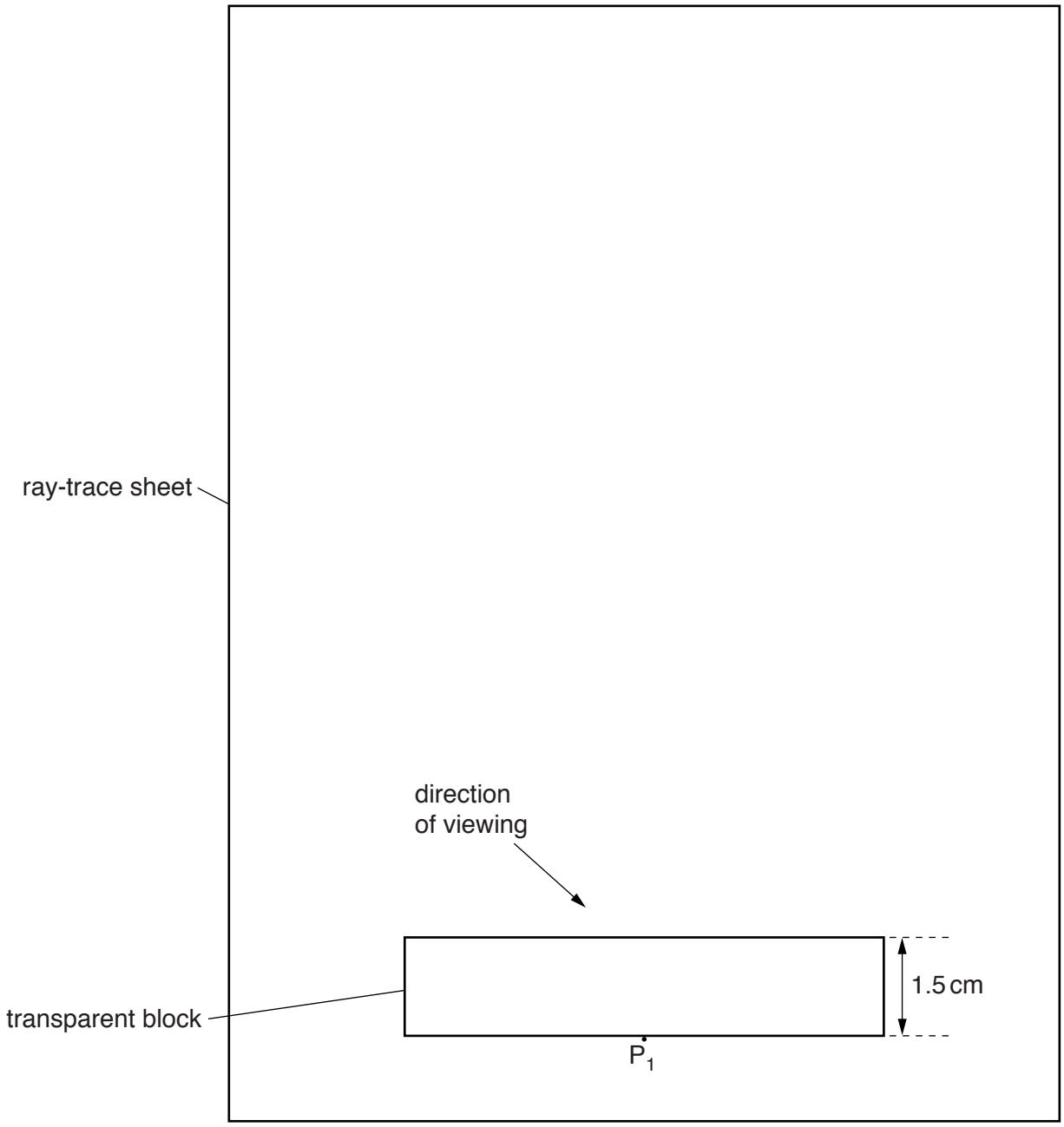

Fig. 5.2

State and explain whether this value for the refractive index is likely to be more or less reliable than the value *n* obtained for the refractive index in part **(c)**.

statement .....

explanation .....

.....

.....
[2]

[Total: 8]

BLANK PAGE

© UCLES 2015

BLANK PAGE

© UCLES 2015

BLANK PAGE

Permission to reproduce items where third-party owned material protected by copyright is included has been sought and cleared where possible. Every reasonable effort has been made by the publisher (UCLES) to trace copyright holders, but if any items requiring clearance have unwittingly been included, the publisher will be pleased to make amends at the earliest possible opportunity.

To avoid the issue of disclosure of answer-related information to candidates, all copyright acknowledgements are reproduced online in the Cambridge International Examinations Copyright Acknowledgements Booklet. This is produced for each series of examinations and is freely available to download at www.cie.org.uk after the live examination series.

Cambridge International Examinations is part of the Cambridge Assessment Group. Cambridge Assessment is the brand name of University of Cambridge Local Examinations Syndicate (UCLES), which is itself a department of the University of Cambridge.