Cambridge IGCSE

Cambridge International Examinations
Cambridge International General Certificate of Secondary Education

CANDIDATE NAME									
CENTRE NUMBER						CANDIDATE NUMBER			

PHYSICS **0625/32**

Paper 3 Theory (Core) **October/November 2016**

1 hour 15 minutes

Candidates answer on the Question Paper.

No Additional Materials are required.

READ THESE INSTRUCTIONS FIRST

Write your Centre number, candidate number and name on all the work you hand in.
Write in dark blue or black pen.
You may use an HB pencil for any diagrams or graphs.
Do not use staples, paper clips, glue or correction fluid.
DO **NOT** WRITE IN ANY BARCODES.

Answer **all** questions.
Electronic calculators may be used.
You may lose marks if you do not show your working or if you do not use appropriate units.
Take the weight of 1.0 kg to be 10 N (acceleration of free fall = 10 m/s^2).

At the end of the examination, fasten all your work securely together.
The number of marks is given in brackets [ ] at the end of each question or part question.

The syllabus is approved for use in England, Wales and Northern Ireland as a Cambridge International Level 1/Level 2 Certificate.

This document consists of **16** printed pages.

© UCLES 2016

CAMBRIDGE International Examinations

1 Fig. 1.1 is an incomplete graph that shows the motion of an object. The axes labels are incomplete.

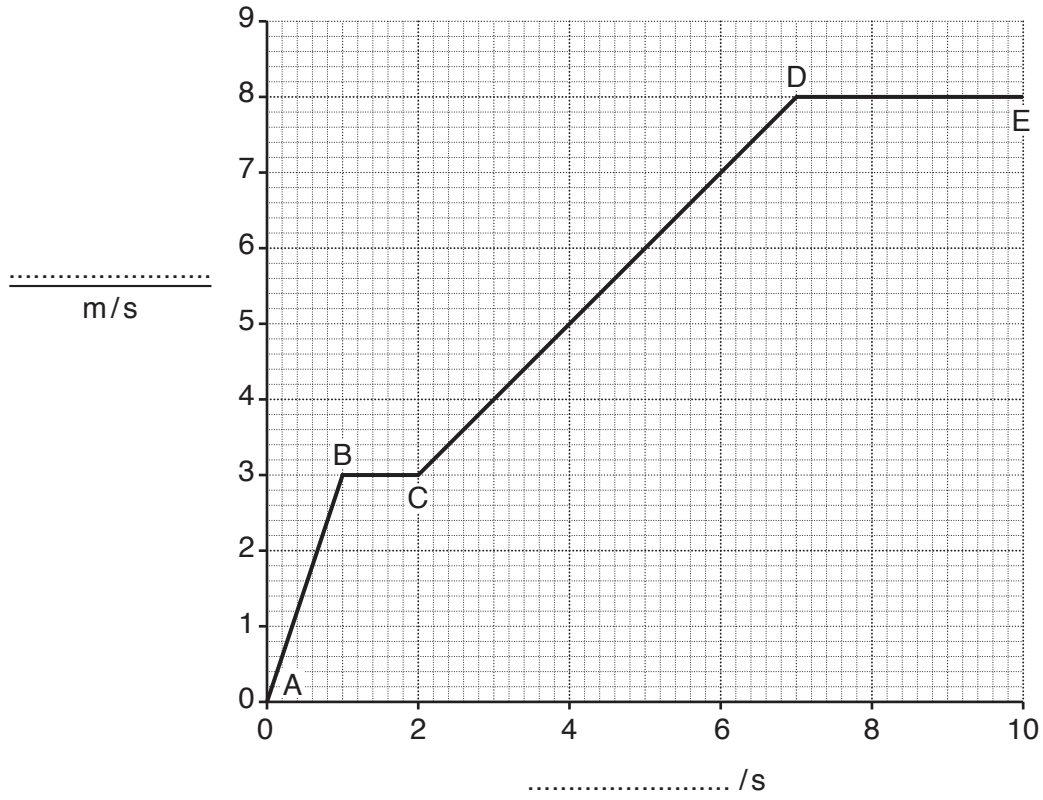

Fig. 1.1

View solution

(a) On Fig. 1.1, complete the label on each of the axes. [1]

(b) Identify the part of the graph which shows the greatest acceleration. Tick **one** box.

View solution

- ☐ A to B
- ☐ B to C
- ☐ C to D
- ☐ D to E

[1]

(c) Calculate the distance travelled by the object between points C and D.

View solution

distance = ... m [3]

© UCLES 2016

(d) Another object starts from rest at the same time as the object shown by the graph in Fig. 1.1.

This object has constant acceleration for 10 s. After 10 s it moves at 8.0 m / s.

On Fig. 1.1, draw a line to show the motion of this object between 0 and 10 s. [1]

[Total: 6]

View solution

2 Fig. 2.1 shows a block of wood.

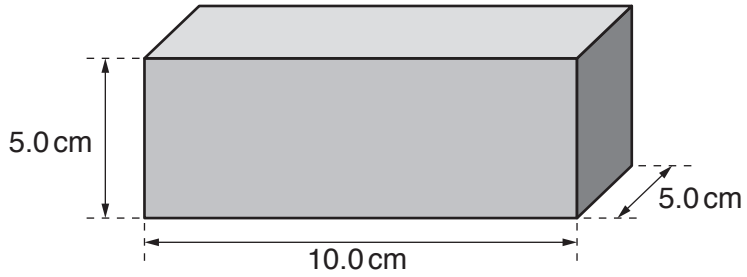

Fig. 2.1 (not to scale)

(a) A student measures the mass of the block. He then measures the length of each side, as shown in Fig. 2.1.

State the names of the measuring instruments used by the student.

1. .....

2. .....

[2]

(b) Calculate the volume of the block of wood.

volume = ... cm^3 [1]

(c) The block of wood shown in Fig. 2.1 has a mass of 200 g.

Calculate the density of the wood.

density = ...g / cm^3 [3]

(d) The table shows the densities of five liquids.

View solution

liquid	density / g/cm^3	does the block float?
alcohol	0.75	
freon	1.37	
glycerol	1.13	
petrol	0.72	
sea water	1.02	

Indicate the liquids on which the block of wood will float by placing ticks (✓) in the final column. [2]

[Total: 8]

© UCLES 2016

3 Fig. 3.1 shows a child and an adult on a see-saw.

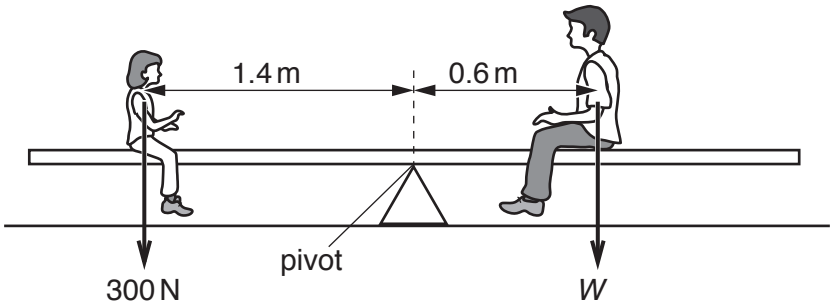

Fig. 3.1

(a) The see-saw shown in Fig. 3.1 is in equilibrium.

View solution

Tick the box alongside any correct statement.

☐ The resultant force on the see-saw is zero.

☐ The resultant turning effect on the see-saw is zero.

[1]

(b) Calculate the moment of the child about the pivot.

View solution

moment = ... N m [3]

(c) Calculate the weight *W* of the adult.

View solution

weight = ... N [3]

(d) State what would happen if the child moved further away from the pivot.

View solution

.....

.....[1]

[Total: 8]

© UCLES 2016

4 Fig. 4.1 shows a student standing on soft sand. The student does not sink into the sand.



Fig. 4.1

The student has a mass of 40 kg.

(a) Calculate the force of her body acting on the sand.

View solution

force = ... N [2]

(b) The total area of both her shoes in contact with the sand is 0.02 m^2.

View solution

Calculate the pressure the student exerts on the sand, when standing as shown in Fig. 4.1.

pressure = ... N/m^2 [3]

(c) The student lifts one foot off the sand. The other foot sinks into the sand.

View solution

Explain why this happens. A calculation is **not** required.

.....

.....

.....[2]

[Total: 7]

5 Fig. 5.1 shows an electrical heater placed so that it is the same distance from two cans.

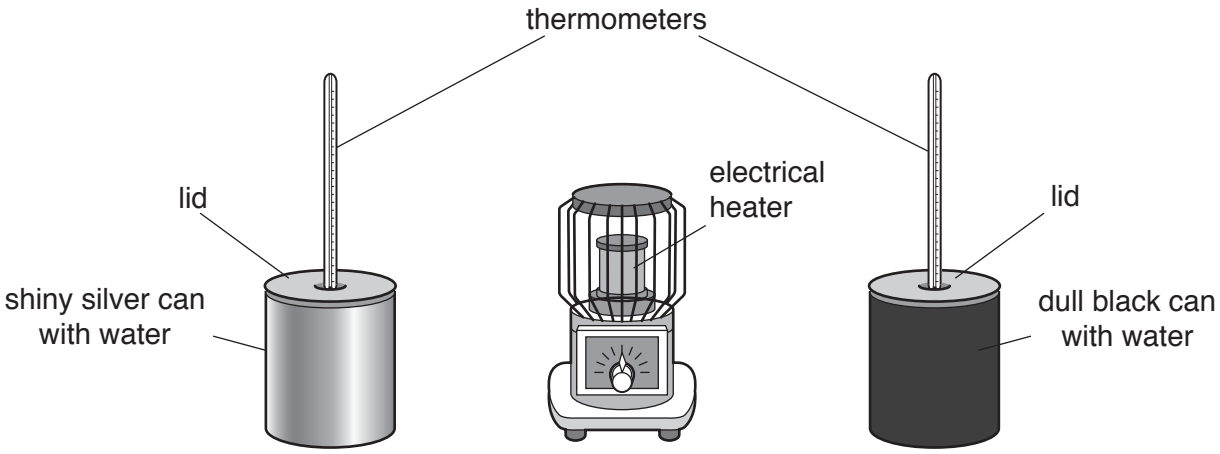

Fig. 5.1

The cans are the same size and contain equal volumes of water, initially at the same temperature.

(a) Energy travels to the cans from the heater.

State the name of this process.

.....[1]

(b) Both cans are heated by the process in **(a)** for 20 minutes.

Compare the temperature of the water in the two cans at the end of the 20 minutes. Explain your answer.

.....

.....

.....

.....[3]

(c) Some water is spilt on the bench when the cans are filled. At the end of the experiment the bench is dry.

State what happened to the water on the bench and explain the process in terms of the water molecules.

.....

.....

.....

.....[3]

[Total: 7]

6 **(a)** Fig. 6.1 shows a ray of light striking a plane mirror.

View solution

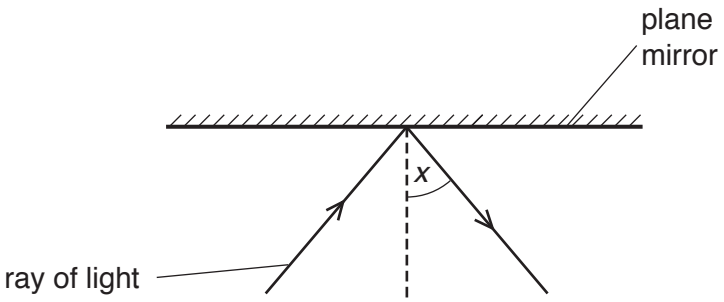

Fig. 6.1

State the name given to angle *x*.

.....[1]

(b) Fig. 6.2 shows an **incorrect** ray diagram for an image of object O formed by a plane mirror.

View solution

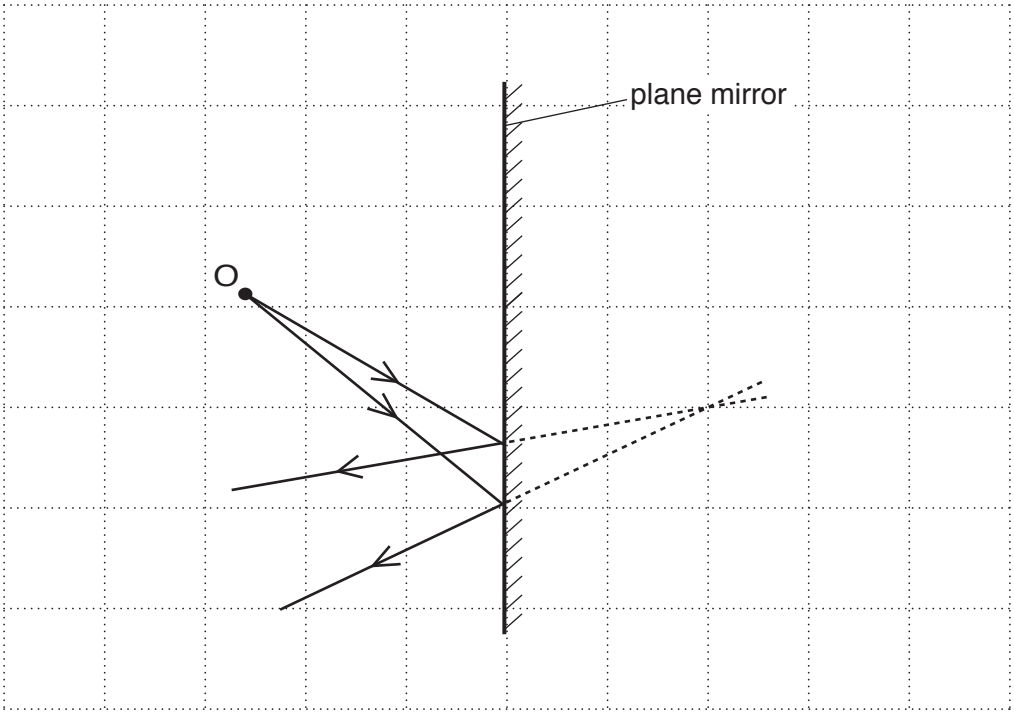

Fig. 6.2

(i) On Fig. 6.2, clearly mark the **correct** position of the image. Label this I. [1]

(ii) Explain why the ray diagram shown in Fig. 6.2 is incorrect.

View solution

.....

.....

.....[2]

[Total: 4]

7 Fig. 7.1 shows how a fishing boat uses ultrasound to locate fish.

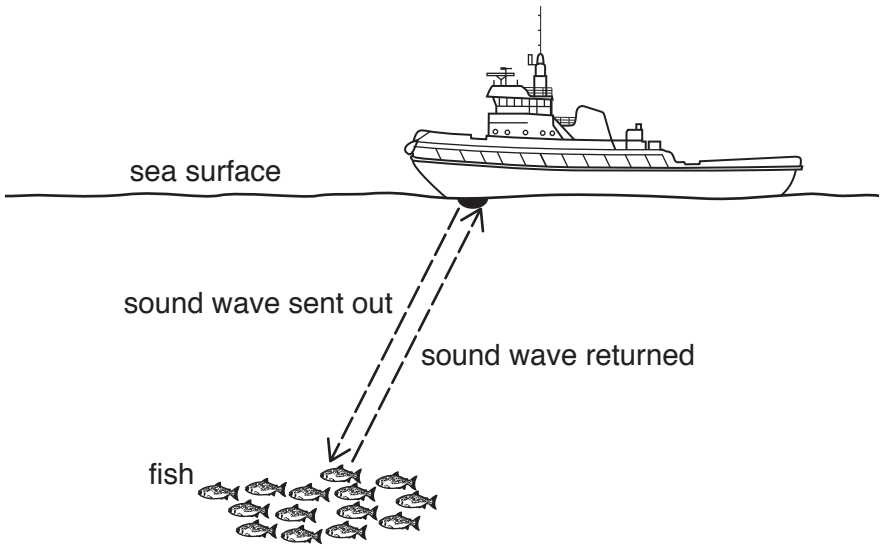

Fig. 7.1

(a) The boat sends out a pulse of ultrasound. The pulse reflects off the fish and returns to the boat.

The time between sending and receiving the pulse is 0.3 s. The speed of sound in sea water is 1500 m / s.

Calculate the distance from the boat to the fish.

View solution

distance = ...m [3]

(b) Tick the box alongside the correct statement for ultrasound.

View solution

- ☐ The frequency of ultrasound is less than 20 Hz.
- ☐ The frequency of ultrasound is between 20 Hz and 2000 Hz.
- ☐ The frequency of ultrasound is between 2000 Hz and 20 000 Hz.
- ☐ The frequency of ultrasound is more than 20 000 Hz. [1]

(c) Ultrasound is not part of the electromagnetic spectrum.

View solution

State the name of a wave that forms part of the electromagnetic spectrum.

.....[1]

[Total: 5]

© UCLES 2016

8 A vibrating source sends a wave along a string.

Fig. 8.1 shows the wave on the string.

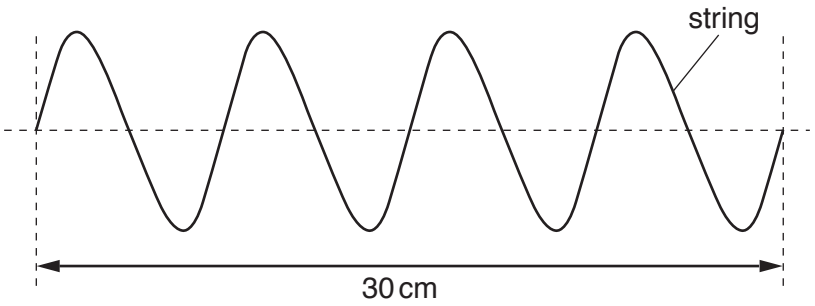

Fig. 8.1

(a) Calculate the wavelength of the wave using information from Fig. 8.1.

View solution

wavelength = ... cm [2]

(b) Explain what is meant by the *frequency* of a wave.

View solution

.....

.....[1]

(c) The wave pattern shown in Fig. 8.1 is produced by the vibrating source in a time of 0.05 s.

View solution

Calculate the frequency of the wave. Include the unit.

frequency = ...[3]

[Total: 6]

© UCLES 2016

9 Fig. 9.1 shows a laptop and a charger. The charger contains a step-down transformer.

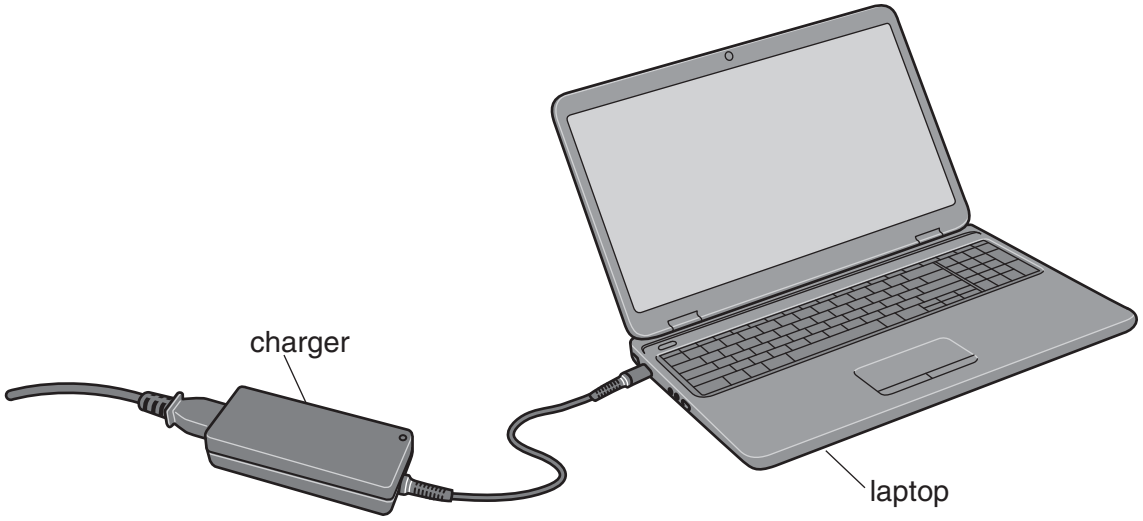

Fig. 9.1

(a) **(i)** Explain the function of a step-down transformer.

View solution

.....

.....[1]

(ii) State the name of the material from which the two coils of the transformer are made.

.....[1]

(iii) The transformer has an input voltage of 240 V and an output voltage of 12 V. There are 10 000 turns on the input coil.

Calculate the number of turns on the output coil.

number of turns = ...[3]

(b) Electricity is transmitted at high voltages.

View solution

State **two** advantages of transmitting electricity in this way.

1. .....

2. .....
[2]

[Total: 7]

© UCLES 2016

10 Fig. 10.1 shows a simplified circuit diagram for a fan-assisted electric oven. The fan is driven by a motor.

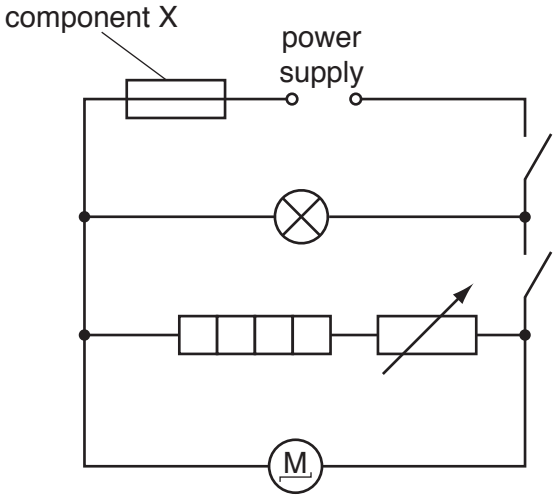

Fig. 10.1

View solution

(a) On Fig. 10.1, circle the symbol representing the heater. [1]

(b) Fig. 10.1 includes a variable resistor.

View solution

(i) State the function of a variable resistor.

.....[1]

(ii) Suggest how using a variable resistor can affect the heater.

View solution

.....[1]

(c) The potential difference across the motor is 250 V. The current in the motor is 2.0 A.

View solution

Calculate the resistance of the motor.

resistance = ... Ω [3]

(d) State the name of component X and explain how it contributes to the safety of the user.

View solution

name of component X .....

explanation .....

.....

[2]

[Total: 8]

11 Fig. 11.1 shows a relay.

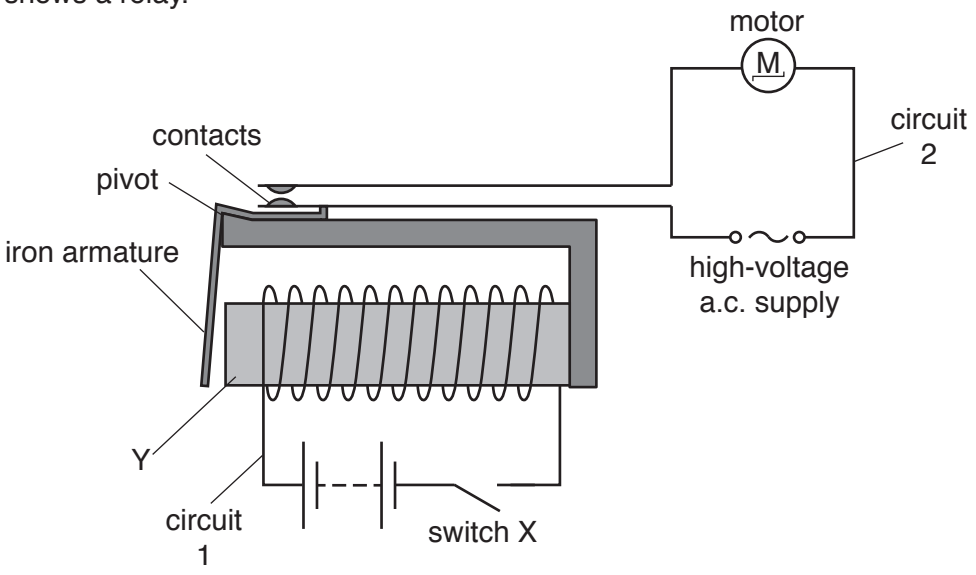

Fig. 11.1

(a) **(i)** The relay is used to switch on the motor in the high-voltage circuit 2. Circuit 1 uses direct current (d.c.).

State what is meant by *direct current*.

.....[1]

(ii) State a suitable material for Y and explain why it is made from this material.

material .....

explanation .....

.....

[2]

(b) Closing switch X in circuit 1 results in a current in circuit 2.

Use Fig. 11.1 to explain why this happens.

.....

.....

.....

.....

.....[3]

(c) Circuit 2 requires thicker wires than the wires in circuit 1.

Suggest why circuit 2 needs thicker wires.

.....

.....[1]

[Total: 7]

© UCLES 2016

12 (a) Carbon-14 is a radioactive element.

View solution

Describe what is meant by the term *radioactive*.

.....

.....

.....[2]

(b) The radioactive decay curve for carbon-14 is shown in Fig. 12.1.

View solution

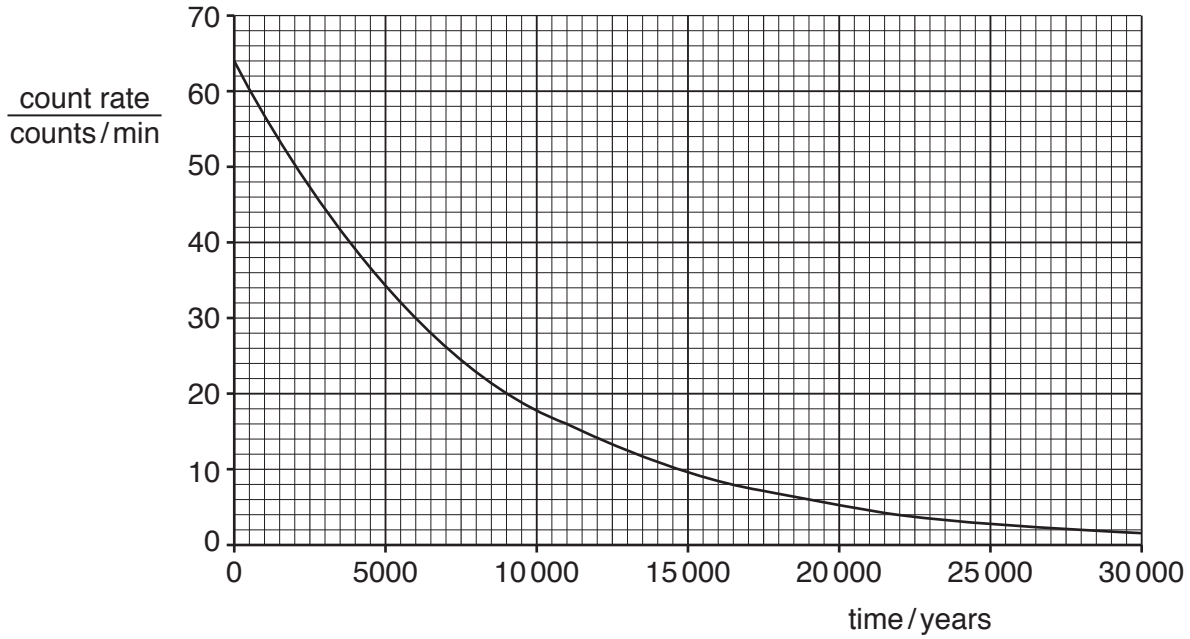

Fig. 12.1

(i) Complete the table using information from Fig. 12.1. The first value has been done for you.

count rate / counts / minute	time / years
40	3800
20	
10	

[1]

(ii) Determine the half-life of carbon-14.

View solution

half-life = ... years [1]

© UCLES 2016

(c) A radioactive iodine isotope has a half-life of 8 days. A sample contains 10 g of this iodine isotope.

Calculate the mass of the iodine isotope remaining in the sample after 16 days.

View solution

mass remaining = ... g [2]

(d) State **one** safety precaution taken by people who use radioactive sources.

.....[1]

[Total: 7]

View solution

Permission to reproduce items where third-party owned material protected by copyright is included has been sought and cleared where possible. Every reasonable effort has been made by the publisher (UCLES) to trace copyright holders, but if any items requiring clearance have unwittingly been included, the publisher will be pleased to make amends at the earliest possible opportunity.

To avoid the issue of disclosure of answer-related information to candidates, all copyright acknowledgements are reproduced online in the Cambridge International Examinations Copyright Acknowledgements Booklet. This is produced for each series of examinations and is freely available to download at www.cie.org.uk after the live examination series.

Cambridge International Examinations is part of the Cambridge Assessment Group. Cambridge Assessment is the brand name of University of Cambridge Local Examinations Syndicate (UCLES), which is itself a department of the University of Cambridge.