Cambridge IGCSE

Cambridge International Examinations
Cambridge International General Certificate of Secondary Education

CANDIDATE NAME									
CENTRE NUMBER						CANDIDATE NUMBER			

PHYSICS **0625/33**

Paper 3 Theory (Core) **October/November 2016**

1 hour 15 minutes

Candidates answer on the Question Paper.

No Additional Materials are required.

READ THESE INSTRUCTIONS FIRST

Write your Centre number, candidate number and name on all the work you hand in.
Write in dark blue or black pen.
You may use an HB pencil for any diagrams or graphs.
Do not use staples, paper clips, glue or correction fluid.
DO **NOT** WRITE IN ANY BARCODES.

Answer **all** questions.
Electronic calculators may be used.
You may lose marks if you do not show your working or if you do not use appropriate units.
Take the weight of 1.0 kg to be 10 N (acceleration of free fall = 10 m / s^2).

At the end of the examination, fasten all your work securely together.
The number of marks is given in brackets [ ] at the end of each question or part question.

The syllabus is approved for use in England, Wales and Northern Ireland as a Cambridge International Level 1/Level 2 Certificate.

This document consists of **18** printed pages and **2** blank pages.

© UCLES 2016

CAMBRIDGE International Examinations

1 Fig. 1.1 shows a speed-time graph for part of a train's journey.

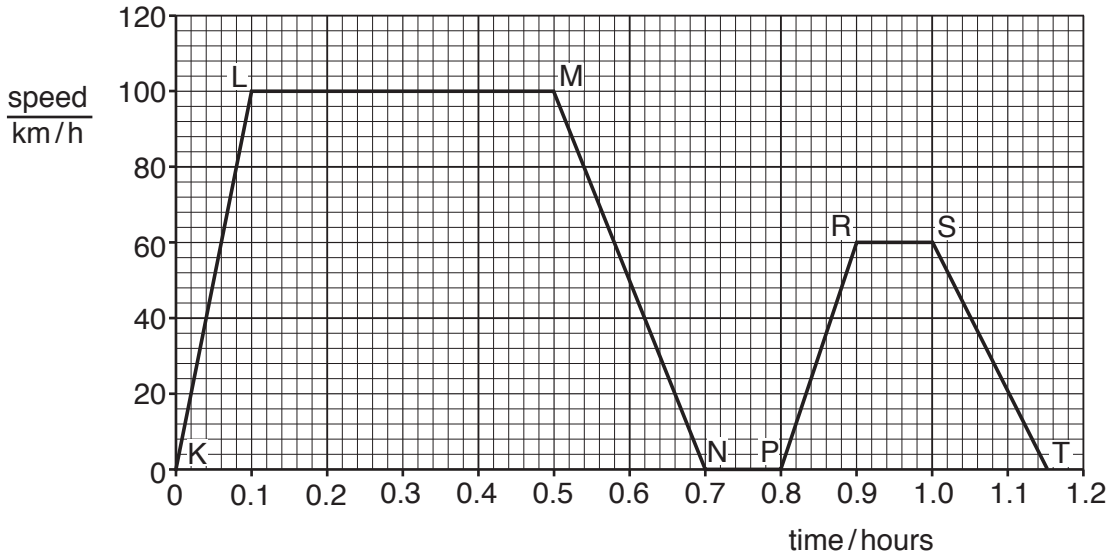

Fig. 1.1

(a) State the maximum speed of the train.

View solution

maximum speed = ... km/h [1]

(b) Identify the regions of the graph that show the train moving at constant speed.
Tick (✓) the correct boxes.

View solution

K–L	
L–M	
M–N	
P–R	
R–S	
S–T	

[1]

(c) During the journey the train stopped for a short period of time.

View solution

State the time, in minutes, for which the train was not moving.

time = ... minutes [2]

© UCLES 2016

(d) Calculate the distance travelled by the train between points M and N.

View solution

distance travelled = ... km [3]

[Total: 7]

© UCLES 2016

BLANK PAGE

© UCLES 2016

2 Fig. 2.1 shows a cyclist travelling along a level road.

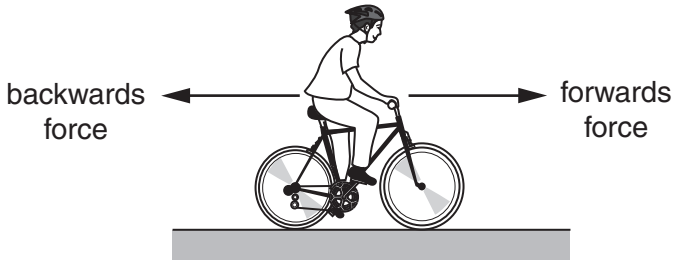

Fig. 2.1

View solution

(a) Describe the movement of the bicycle when the forces shown in Fig. 2.1 are of equal size.

..... [1]

View solution

(b) Fig. 2.2 shows the forces on the bicycle later in the journey.



Fig. 2.2

Determine the size and direction of the resultant force.

size of resultant force = ... N

direction of resultant force = ...

[2]

View solution

(c) At the end of the journey the cyclist applies the brakes to stop the bicycle.

Name and describe the force that causes the bicycle to stop.

force .....

description .....

.....

[2]

[Total: 5]

3 A load is hung from a spring, as shown in Fig. 3.1.

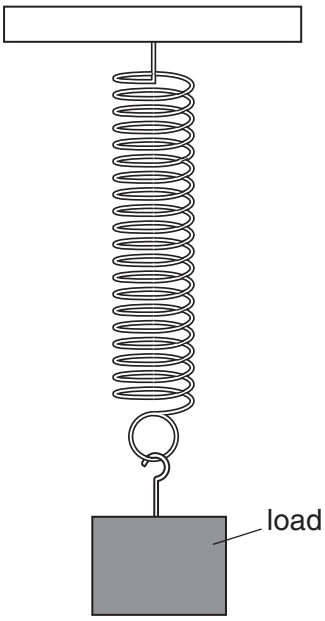

Fig. 3.1

The load is pulled down a few centimetres and then released. The spring and load oscillate up and down.

(a) State the position of the load

View solution

(i) when the spring has maximum elastic (strain) energy,

..... [1]

(ii) when the load has maximum kinetic energy.

..... [1]

View solution

© UCLES 2016

(b) The spring oscillates up and down for a short time.

View solution

(i) State the principle of conservation of energy.

.....

..... [1]

(ii) Describe the energy changes as the spring and load oscillate and suggest why the load and spring eventually stop moving.

.....

.....

.....

.....

.....

.....

.....

.....

.....

.....

..... [3]

[Total: 6]

View solution

4 Fig. 4.1 shows a car parked on a road.



Fig. 4.1

(a) The car has a mass of 1000 kg.

View solution

Calculate the weight of the car.

weight of car = ... N [2]

(b) **(i)** The combined weight of the car and its driver is 10 500 N. The area of each tyre in contact with the road is 125 cm^2. Each tyre supports a quarter of the combined weight of the car and driver.

View solution

Calculate the pressure that each tyre exerts on the ground.

pressure = ... N/cm^2 [3]

(ii) Later, the car is parked on some long wooden planks on a muddy field.

View solution

Explain why the planks prevent the car from sinking into the mud.

.....

.....

.....

..... [2]

© UCLES 2016

(c) (i) A driver needs to remove a wheel from the car. To undo the wheel nuts the driver uses a wrench, as shown in Fig. 4.2.

View solution

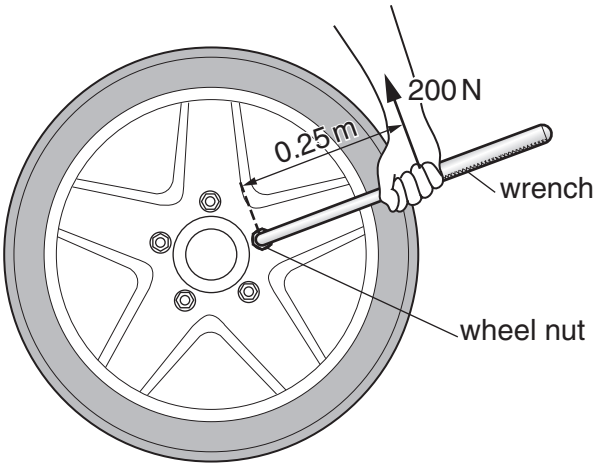

Fig. 4.2

A force of 200 N is applied perpendicular to the wrench. The force is applied 0.25 m from the centre of a wheel nut.

Calculate the moment produced by this force. Include the unit.

moment = ... [3]

(ii) One of the wheel nuts is difficult to turn.

Describe how the driver can increase the moment when using the same force of 200 N applied to the wrench.

.....

..... [1]

[Total: 11]

View solution

5 A fisherman notices that the water in a lake is warm and that there is a cool breeze from the land, as shown in Fig. 5.1.

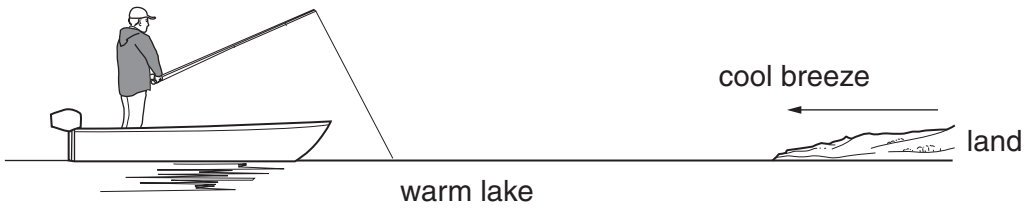

Fig. 5.1

(a) The fisherman tries to explain why there is a cool breeze from the land.
The statements below describe his ideas.

View solution

Put a tick (✓) in the box alongside each correct statement.

- ☐ Air above the surface of the warm lake becomes less dense.
- ☐ Air is a good thermal conductor.
- ☐ Denser water rises to the surface of the lake.
- ☐ The cool breeze occurs as a result of convection.
- ☐ Warmer air rises.
- ☐ Water is a good thermal conductor.

[3]

(b) As the night gets colder, the fisherman puts on a jacket to keep warm.

View solution

Explain how the jacket keeps the fisherman warm.

.....

.....

.....

..... [2]

[Total: 5]

© UCLES 2016

6 A candle is placed in front of a vertical mirror. Fig. 6.1 shows a ray of light reflected from the mirror.

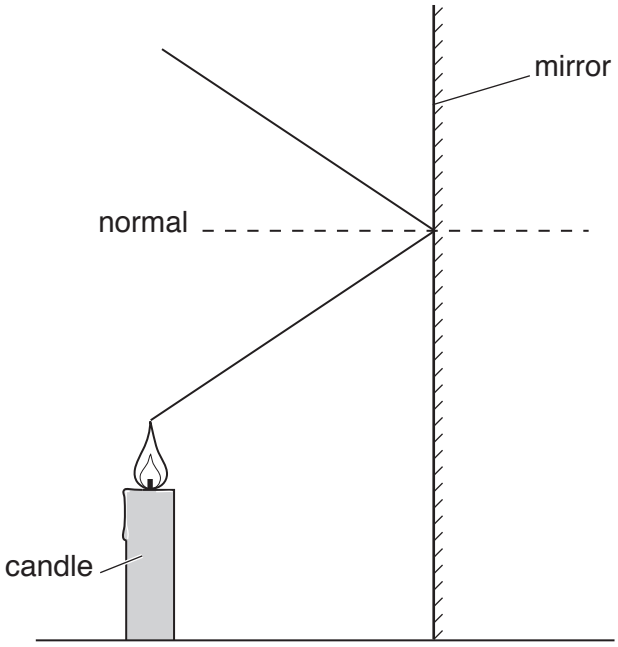

Fig. 6.1

(a) (i) On Fig. 6.1, draw an arrow on the ray to show the direction of travel of the ray of light. [1]

(ii) On Fig. 6.1, label the angle of incidence *i* and the angle of reflection *r*. [1]

(iii) Tick (✓) **two** boxes to describe the image of the candle in the mirror.

View solution

- ☐ closer to the mirror than the candle
- ☐ the same distance from the mirror as the candle
- ☐ on the surface of the mirror
- ☐ smaller than the candle
- ☐ the same size as the candle [2]

(b) Other rays of light also strike the mirror and are reflected.

View solution

State the rule that always links the angle of incidence and the angle of reflection.

..... [1]

[Total: 5]

© UCLES 2016

7 Two people watch a storm cloud above a tree. Person A is watching from her house and person B is watching from a distant hill.

Lightning creates a bright flash and loud thunder at the same time. The lightning strikes the tree not far from person A's house, as shown in Fig. 7.1.

View solution



Fig. 7.1

For each person, describe the time interval between seeing the lightning and hearing the thunder and explain your answers.

person A description of time interval .....

.....

.....

person B description of time interval .....

.....

.....

explanation .....

.....

.....

.....

.....

[4]

[Total: 4]

8 Fig. 8.1 shows two uncharged (neutral) plastic spheres. Each sphere is suspended by an insulating thread.

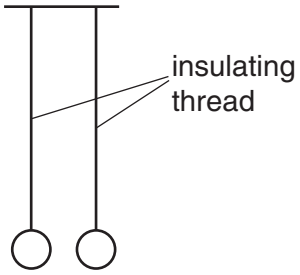

Fig. 8.1

(a) Suggest a material for the insulating threads.

View solution

..... [1]

(b) The spheres can be given a charge.

View solution

Three different experiments are carried out using the arrangements shown in Fig. 8.2.

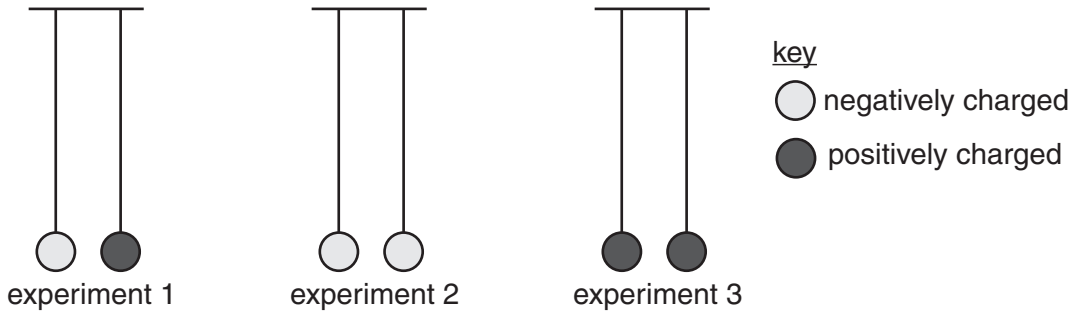

Fig. 8.2

For each experiment, describe the force, if any, between the spheres.

experiment 1 .....

experiment 2 .....

experiment 3 .....

[3]

(c) State and explain how one of the plastic spheres can be given a positive charge.

View solution

.....

.....

..... [2]

[Total: 6]

© UCLES 2016

9 Fig. 9.1 shows the electric circuit for a fan heater.

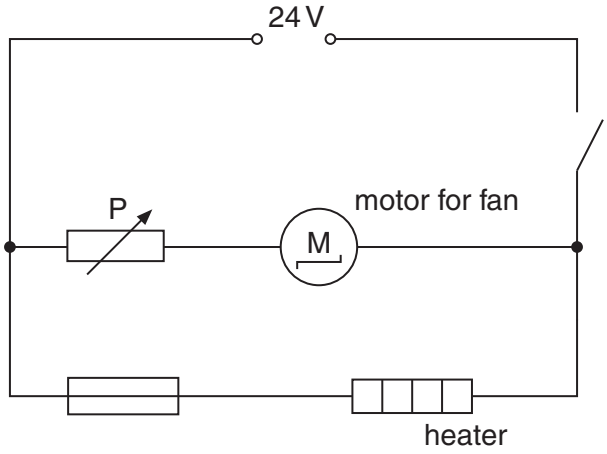

Fig. 9.1

The fan blows air over the heater. The fan is driven by a motor connected to a 24 V d.c. supply.

(a) Explain the difference between an a.c. supply and a d.c. supply.

View solution

.....

..... [1]

(b) The circuit includes a component labelled P.

View solution

(i) Name this component.

..... [1]

(ii) Explain the function of this component in the circuit.

View solution

.....

..... [2]

(c) **(i)** The heater has a resistance of 8.5 Ω and the potential difference across it is 24 V.

View solution

Calculate the current in the heater. Include the unit.

current = ... [4]

(ii) Suggest the rating of the fuse needed for the heater.

View solution

..... [1]

© UCLES 2016

(d) A different fan heater for use in a house is connected to a 110 V supply. This heater has a metal case.

View solution

Explain the benefit of earthing the metal case.

.....

.....

.....

..... [1]

[Total: 10]

10 This question is about atoms.

(a) Complete the sentences below with the correct type of particle in each case.

View solution

- In a neutral atom, the nucleus is surrounded by negative ..... .
- The nucleus is made up of positive ..... and neutral ..... .

[2]

(b) Explain the meaning of the term *isotope*.

View solution

.....

.....

..... [1]

(c) α-particles, β-particles and γ-rays may be emitted from radioactive nuclei.

View solution

Complete the table. Place **one** tick (✓) in each column.

	negatively charged	most ionising	most penetrating
α-particle			
β-particle			
γ-rays			

[3]

[Total: 6]

© UCLES 2016

11 Fig. 11.1 represents part of an electricity transmission system.

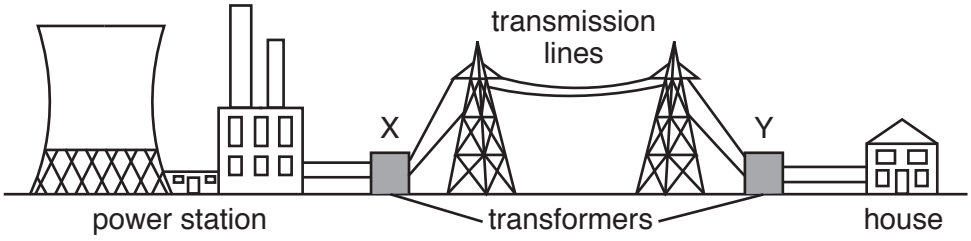

Fig. 11.1

(a) Transformers can be *step-up* or *step-down*.

View solution

State the type of transformer shown at X and the type of transformer shown at Y.

X .....

Y .....

[1]

(b) A transformer has a primary coil of 24 000 turns, a secondary coil of 2000 turns and an input voltage of 132 000 V.

View solution

Calculate the output voltage.

output voltage = ... V [2]

(c) State **two** advantages of transmitting electricity at high voltages.

View solution

1. .....

2. .....

[2]

[Total: 5]

12 Fig. 12.1 shows a coil of wire between the poles of a magnet.

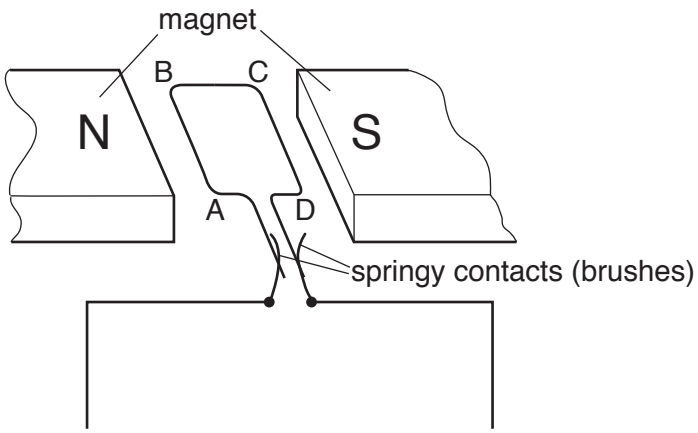

Fig. 12.1

View solution

(a) (i) On Fig. 12.1, complete the circuit diagram by adding a battery and a switch in series with the coil. [2]

(ii) When the switch is closed there is a current in the coil which produces a turning effect.

State **three** ways of increasing the turning effect on the coil.

View solution

1. .....

2. .....

3. .....

[3]

© UCLES 2016

(b) (i) A student has a coil of wire, a magnet and a galvanometer.

Describe an experiment using this equipment to demonstrate electromagnetic induction. You may draw a diagram to show the arrangement.

View solution

.....

.....

.....

.....

..... [3]

(ii) The strength of the magnetic field affects the size of the induced e.m.f.

View solution

Name **two** other factors that also affect the size of the induced e.m.f.

1. .....

2. .....

[2]

[Total: 10]

© UCLES 2016

BLANK PAGE

Permission to reproduce items where third-party owned material protected by copyright is included has been sought and cleared where possible. Every reasonable effort has been made by the publisher (UCLES) to trace copyright holders, but if any items requiring clearance have unwittingly been included, the publisher will be pleased to make amends at the earliest possible opportunity.

To avoid the issue of disclosure of answer-related information to candidates, all copyright acknowledgements are reproduced online in the Cambridge International Examinations Copyright Acknowledgements Booklet. This is produced for each series of examinations and is freely available to download at www.cie.org.uk after the live examination series.

Cambridge International Examinations is part of the Cambridge Assessment Group. Cambridge Assessment is the brand name of University of Cambridge Local Examinations Syndicate (UCLES), which is itself a department of the University of Cambridge.

© UCLES 2016