Cambridge IGCSE

Cambridge International Examinations
Cambridge International General Certificate of Secondary Education

CANDIDATE NAME									
CENTRE NUMBER						CANDIDATE NUMBER				

PHYSICS **0625/43**

Paper 4 Theory (Extended) **October/November 2016**

1 hour 15 minutes

Candidates answer on the Question Paper.

No Additional Materials are required.

READ THESE INSTRUCTIONS FIRST

Write your Centre number, candidate number and name on all the work you hand in.
Write in dark blue or black pen.
You may use an HB pencil for any diagrams or graphs.
Do not use staples, paper clips, glue or correction fluid.
DO **NOT** WRITE IN ANY BARCODES.

Answer **all** questions.
Electronic calculators may be used.
You may lose marks if you do not show your working or if you do not use appropriate units.
Take the weight of 1.0 kg to be 10 N (acceleration of free fall = 10 m/s^2).

At the end of the examination, fasten all your work securely together.
The number of marks is given in brackets [ ] at the end of each question or part question.

The syllabus is approved for use in England, Wales and Northern Ireland as a Cambridge International Level 1/Level 2 Certificate.

This document consists of **15** printed pages and **1** blank page.

© UCLES 2016

CAMBRIDGE International Examinations

1 A diver in the sea uses breathing apparatus, which releases gas bubbles.

Fig. 1.1 shows bubbles rising to the surface.

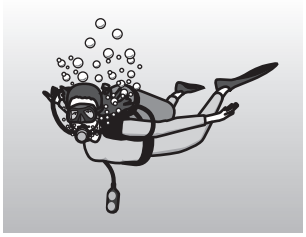

Fig. 1.1

The bubbles start from rest and, at first, they move upwards with a constant acceleration.

Fig. 1.2 is an incomplete speed-time graph for one of the bubbles from time $t = 0$ s until $t = 10$ s.

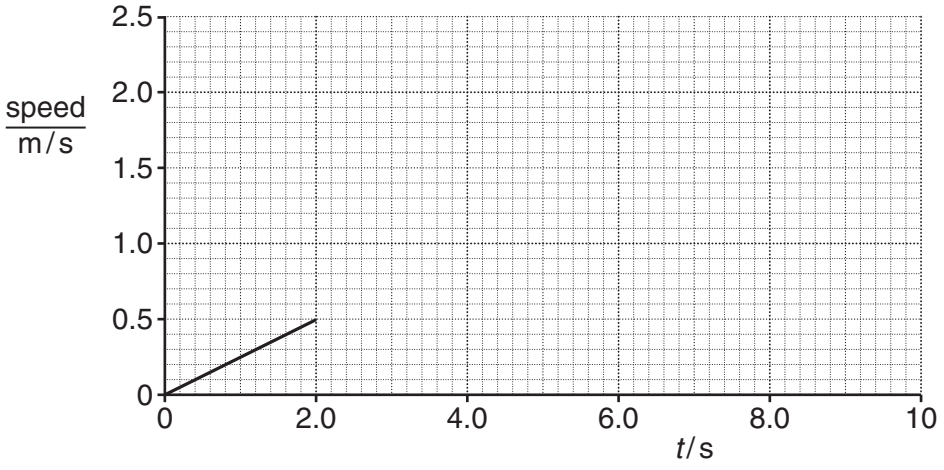

Fig. 1.2

(a) Using Fig. 1.2, determine the acceleration of the bubble during the first 2.0 s.

View solution

acceleration = ... [3]

(b) (i) After $t = 2.0$ s, the acceleration of this bubble decreases gradually until at $t = 10$ s its acceleration is zero.

Complete Fig. 1.2, by sketching a possible continuation of the speed-time graph. [2]

(ii) State the name given to a negative acceleration.

View solution

..... [1]

[Total: 6]

© UCLES 2016

2 Two mechanics, A and B, are trying to use a two-person spanner (wrench) to loosen a nut on a large wheel.

Fig. 2.1 shows the forces exerted by the two mechanics.

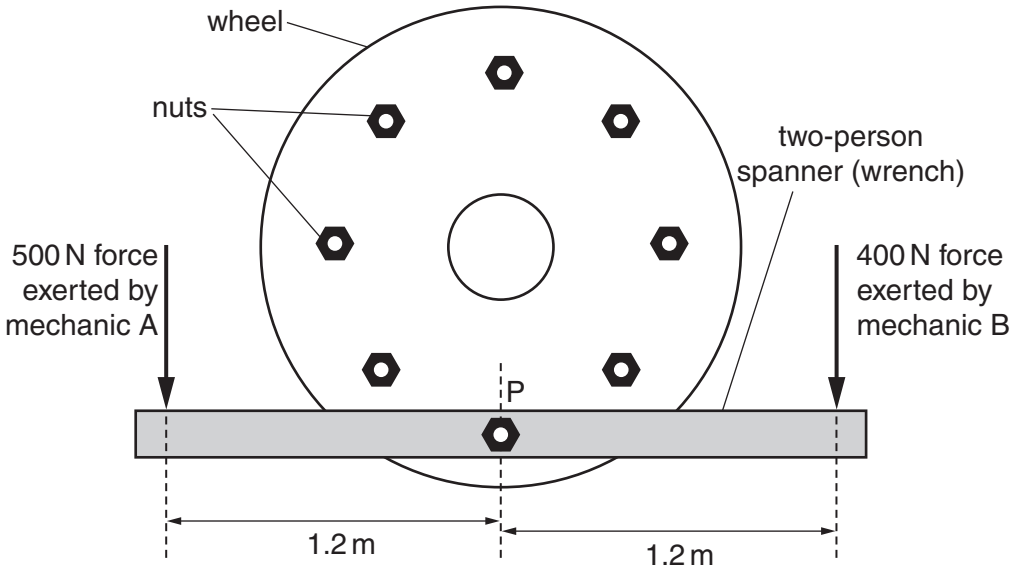

Fig. 2.1

Mechanic A exerts a force of 500 N at a distance of 1.2 m from nut P. Mechanic B exerts a force of 400 N at a distance of 1.2 m on the other side of nut P.

(a) Calculate the magnitude and the direction of the resultant moment exerted by the mechanics on nut P.

View solution

magnitude of resultant moment = ...

direction .....

[4]

(b) Mechanic B reverses the direction of the 400 N force that he exerts on the spanner. Mechanic A continues to exert the same force of 500 N downwards.

(i) Calculate the magnitude of the new resultant moment exerted by the mechanics.

View solution

magnitude of resultant moment = ... [1]

(ii) Calculate the magnitude of the resultant force now exerted by the mechanics on the spanner.

View solution

force = ... [1]

[Total: 6]

3 **(a)** **(i)** State how a *vector* quantity differs from a *scalar* quantity.

View solution

.....

..... [1]

(ii) State and explain whether *momentum* is a vector quantity or a scalar quantity.

View solution

.....

..... [1]

(b) A spacecraft of mass 35 kg is travelling in a straight line at a velocity of 1200 m / s. Assume no external forces act on the spacecraft.

View solution

Calculate

(i) the momentum of the spacecraft,

momentum = ... [2]

(ii) the kinetic energy of the spacecraft.

View solution

kinetic energy = ... [2]

(c) The rocket fuel stored in the moving spacecraft in **(b)** explodes and the spacecraft splits into two sections. One section speeds up and the other section slows down.

(i) State what happens to the total momentum.

View solution

..... [1]

(ii) Predict and explain what happens to the total kinetic energy.

View solution

.....

..... [2]

[Total: 9]

© UCLES 2016

4 A manometer containing a liquid X, is used to measure the pressure of a gas supply. Fig. 4.1 shows the manometer.

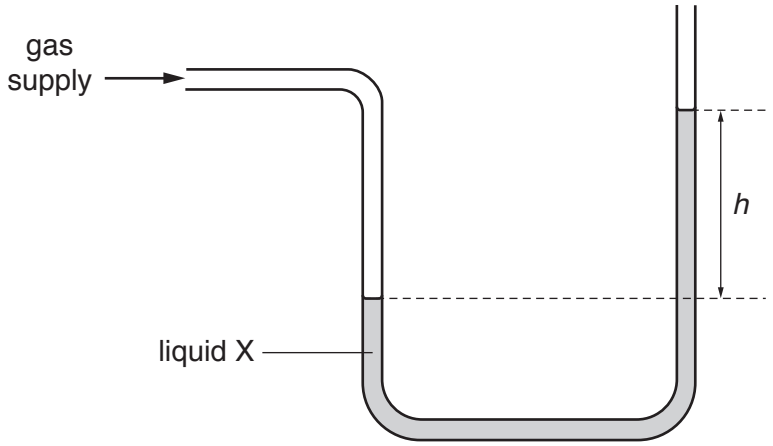

Fig. 4.1

Atmospheric pressure is 9.9×10^4 Pa.

(a) The height h is 0.36 m. The density of liquid X is 840 kg / m^3.

View solution

Calculate

(i) the pressure due to a column of liquid X of height 0.36 m,

pressure = ... [2]

(ii) the pressure of the gas supply.

View solution

pressure = ... [1]

(b) The pressure of the gas supply stays constant.

View solution

Describe what happens to the liquid levels when

(i) the liquid X is replaced by the same volume of a liquid of greater density,

.....

..... [2]

(ii) a manometer tube with a slightly smaller area of cross-section, containing an identical volume of liquid X, is used.

.....

..... [2]

[Total: 7]

© UCLES 2016

Turn over

5 **(a)** **(i)** The temperature of a quantity of air is increased.

View solution

Describe the effect of this increase in temperature on the air molecules.

.....

..... [1]

(ii) The temperature of a block of aluminium is decreased.

View solution

Describe the effect of this decrease in temperature on the density of the aluminium. Explain your answer in terms of the separation of the atoms.

effect .....

explanation .....

..... [2]

(b) A road is covered with a layer of snow. The temperature of the snow is 0 °C. The specific latent heat of fusion of snow is 3.3×10^5 J/kg.

View solution

The snow forms a layer of uniform thickness on the road surface.

(i) Calculate the power needed to melt 0.12 kg of the snow in 220 s.

power = ... [4]

(ii) The snow is melted by solar radiation. In 220 s, exactly 0.12 kg of the snow melts to produce water at 0 °C.

The power of the solar radiation incident on each 0.12 kg of snow is greater than the power calculated in **(b)(i)**.

View solution

Suggest **one** reason why this is so.

.....

..... [1]

[Total: 8]

© UCLES 2016

BLANK PAGE

6 **(a)** Fig. 6.1 shows the crests of a wave in the sea as it reaches the entrance to a harbour.

View solution

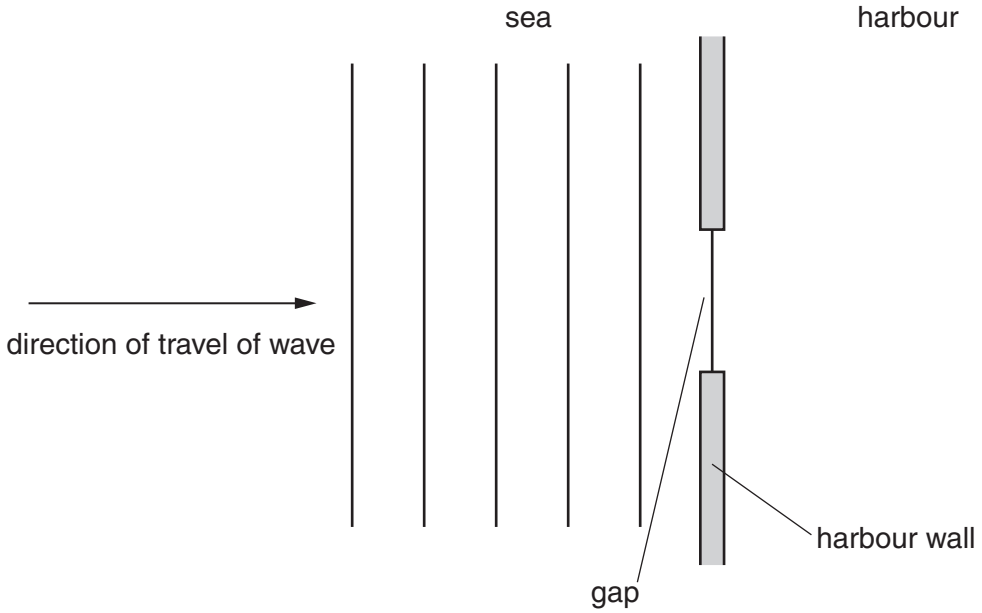

Fig. 6.1

(i) The wave reaches the gap in the harbour wall and passes into the harbour.

On Fig. 6.1, draw the first three crests to the right of the harbour wall. [3]

© UCLES 2016

(ii) A wave with a larger wavelength approaches the harbour. Fig. 6.2 shows this wave.

View solution

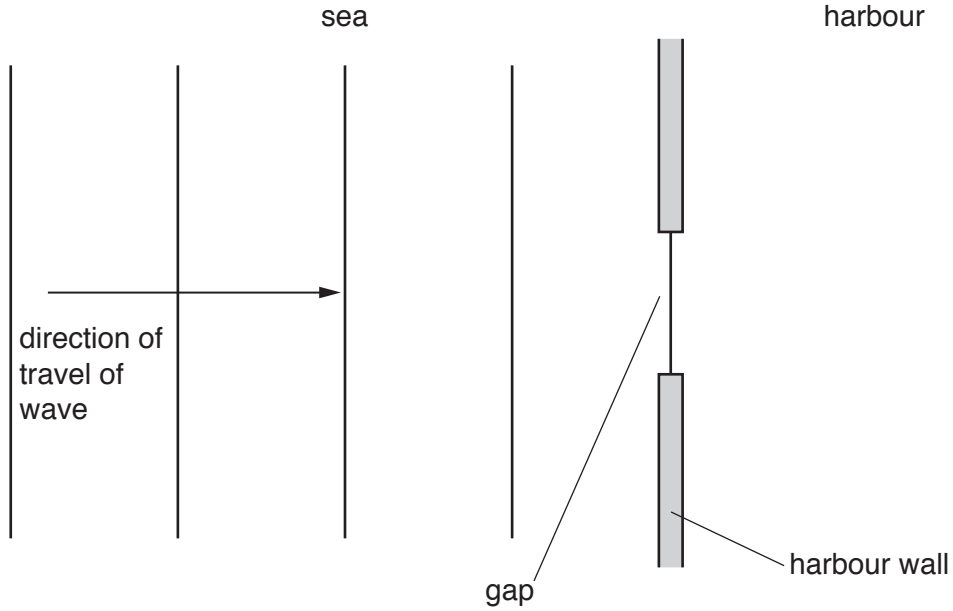

Fig. 6.2

This second wave reaches the gap in the harbour wall and passes into the harbour.

On Fig. 6.2, draw the first three crests to the right of the harbour wall. [1]

(b) An earthquake produces two types of wave, P-waves and S-waves.

View solution

The vibrations in P-waves are parallel to the direction of travel of the wave.
The vibrations in S-waves are perpendicular to the direction of travel of the wave.

Place **one** tick for each type of wave, to indicate whether it is longitudinal or transverse.

type of wave	longitudinal wave	transverse wave
electromagnetic wave		
P-wave		
S-wave		
sound wave		
ultrasound wave		

[3]

[Total: 7]

© UCLES 2016

7 Some of the components of the electromagnetic spectrum, in order of decreasing wavelength, are shown.

radio waves microwaves visible light ultraviolet radiation gamma rays

(a) (i) State the speed at which all electromagnetic waves travel in a vacuum.

..... [1]

(ii) State which of the components of the electromagnetic spectrum shown has the lowest frequency.

..... [1]

(iii) Two components of the electromagnetic spectrum are not listed above.

View solution

State the names of these components.

1. .....

2. .....

[2]

(b) One application of microwaves is in microwave ovens, which cook food very quickly.

Fig. 7.1 shows the inside of the glass door of a microwave oven, covered with a metal mesh.

View solution

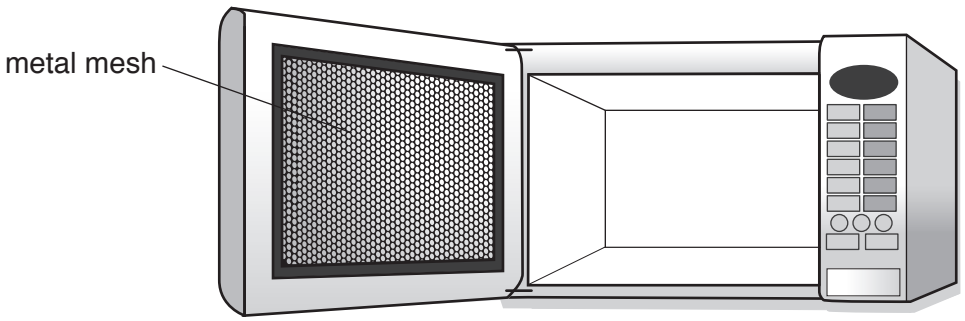

Fig. 7.1

The metal mesh prevents the microwaves from escaping by reflecting them back into the oven.

(i) Suggest **one** reason why it is sensible to prevent microwaves from escaping.

.....

..... [1]

(ii) State **one** further application of microwaves, other than in microwave ovens.

View solution

..... [1]

[Total: 6]

8 For blue light, the refractive index of a particular type of transparent plastic is 1.5.

(a) Calculate the critical angle for blue light in this type of plastic.

View solution

critical angle = ... [2]

(b) A block is made of this type of plastic. Blue light travelling in a vacuum is incident on the side of the block at point P.

View solution

Fig. 8.1 shows that the angle of incidence is 45°.

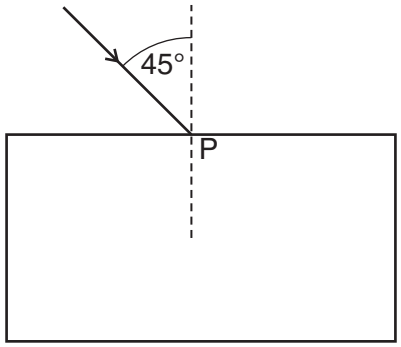

Fig. 8.1

At P, some of the light is refracted into the block and some of the light is reflected.

(i) The blue light used in this experiment is monochromatic.

State, in terms of a measurable quantity, what is meant by *monochromatic*.

..... [1]

(ii) Calculate the angle of refraction of the light in the block.

View solution

angle of refraction = ... [2]

(iii) On Fig. 8.1, draw the path taken by the light that passes into the block and the path of the light that is reflected at P. [1]

[Total: 6]

View solution

© UCLES 2016

9 A circuit consists of a 12 V battery, three resistors and a switch.

Fig. 9.1 is the circuit diagram.

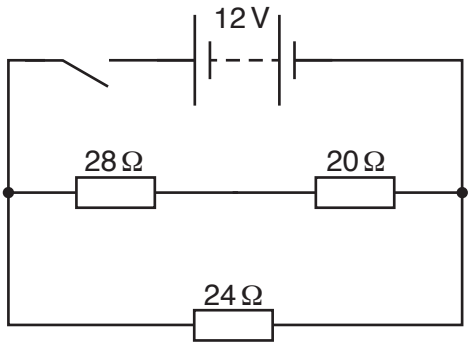

Fig. 9.1

(a) The battery consists of 2.0 V cells in series.

State the number of 2.0 V cells in series in the battery.

number of cells = ... [1]

(b) Calculate

(i) the combined resistance of the two resistors in series,

resistance = ... [1]

(ii) the total resistance of the circuit.

resistance = ... [2]

(c) The switch is closed.

View solution

Calculate

(i) the current in the 20 Ω resistor,

current = ... [2]

(ii) the charge that flows through the 20 Ω resistor in 6.0 minutes.

View solution

charge = ... [2]

[Total: 8]

10 A wire AB hangs loosely between the N pole and the S pole of a strong magnet.

Fig. 10.1 shows the arrangement.

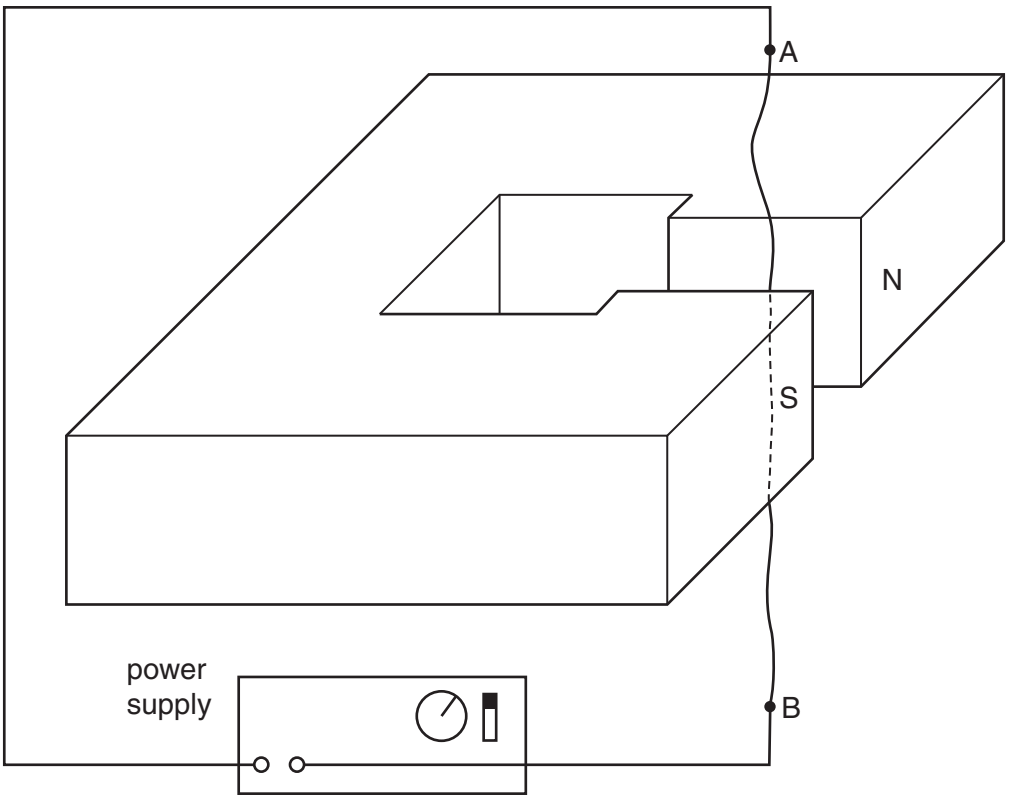

Fig. 10.1

(a) The wire is connected to a power supply.

(i) When the power supply is switched on, there is a very large direct current (d.c.) in the wire in the direction from B to A.

Describe what happens to the wire as the power supply is switched on.

View solution

.....

..... [2]

(ii) The power supply is adjusted and there is now a large alternating current (a.c.) in the wire.

Describe what happens to the wire.

View solution

.....

..... [1]

© UCLES 2016

(b) The power supply is removed from the circuit and a galvanometer is connected in its place.

View solution

(i) The wire is moved quickly to the right, between the poles of the magnet.

Explain why the galvanometer registers a current.

.....

..... [2]

(ii) State what is observed on the galvanometer when the wire is moved to the left at the same speed as in **(b)(i)**.

.....

..... [2]

(iii) State what is observed on the galvanometer when the wire is moved to the right at a much lower speed than in **(b)(i)**.

.....

..... [1]

[Total: 8]

© UCLES 2016

11 (a) State, using nuclide notation, the symbol for

(i) an iron (atomic symbol Fe) nucleus which has nucleon number 56 and proton number 26,

..... [1]

(ii) a platinum (atomic symbol Pt) nucleus which contains 78 protons and 118 neutrons.

View solution

..... [2]

(b) (i) A nucleus of plutonium-238 ($^{238}_{94}$Pu) decays to a uranium (atomic symbol U) nucleus by the emission of an α-particle.

Write down the nuclear equation that represents this radioactive decay.

View solution

..... [3]

(ii) The half-life of plutonium-238 is 90 years. A sample contains 9.6×10^{10} atoms of plutonium-238.

Predict the number of plutonium-238 atoms in the sample that decay in 270 years.

View solution

number of atoms that decay = ... [3]

[Total: 9]

Permission to reproduce items where third-party owned material protected by copyright is included has been sought and cleared where possible. Every reasonable effort has been made by the publisher (UCLES) to trace copyright holders, but if any items requiring clearance have unwittingly been included, the publisher will be pleased to make amends at the earliest possible opportunity.

To avoid the issue of disclosure of answer-related information to candidates, all copyright acknowledgements are reproduced online in the Cambridge International Examinations Copyright Acknowledgements Booklet. This is produced for each series of examinations and is freely available to download at www.cie.org.uk after the live examination series.

Cambridge International Examinations is part of the Cambridge Assessment Group. Cambridge Assessment is the brand name of University of Cambridge Local Examinations Syndicate (UCLES), which is itself a department of the University of Cambridge.

© UCLES 2016