Cambridge IGCSE

Cambridge International Examinations
Cambridge International General Certificate of Secondary Education

CANDIDATE NAME									
CENTRE NUMBER						CANDIDATE NUMBER				

PHYSICS **0625/53**

Paper 5 Practical Test **October/November 2016**

1 hour 15 minutes

Candidates answer on the Question Paper

Additional Materials: As listed in the Confidential Instructions

READ THESE INSTRUCTIONS FIRST

Write your Centre number, candidate number and name in the spaces at the top of the page.
Write in dark blue or black pen.
You may use an HB pencil for any diagrams or graphs.
Do not use staples, paper clips, glue or correction fluid.
DO **NOT** WRITE IN ANY BARCODES.

Answer **all** questions.
You are advised to spend about 20 minutes on each of questions 1 to 3, and 15 minutes on question 4.
Electronic calculators may be used.
You may lose marks if you do not show your working or if you do not use appropriate units.

At the end of the examination, fasten all your work securely together.
The number of marks is given in brackets [ ] at the end of each question or part question.

For Examiner's Use	
1	
2	
3	
4	
Total	

The syllabus is approved for use in England, Wales and Northern Ireland as a Cambridge International Level 1/Level 2 Certificate.

This document consists of **10** printed pages and **2** blank pages.

© UCLES 2016

CAMBRIDGE International Examinations

1 In this experiment, you will investigate how the surface area of water exposed to the air affects the rate at which the water cools.

Carry out the following instructions, referring to Fig. 1.1. Beaker **B** is bigger than beaker **A**.

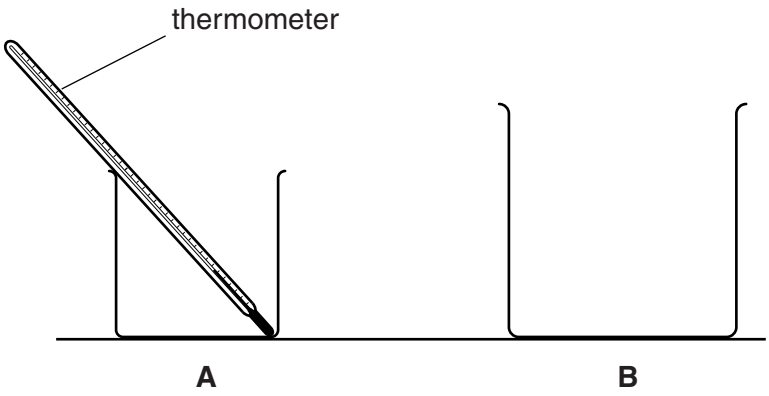

Fig. 1.1

(a) • Pour 75 cm^3 of hot water into beaker **A**.

View solution

- Record, in the first row of Table 1.1, the temperature θ of the water in beaker **A** and immediately start the stopclock.
- Record, in the table, the temperature θ of the water at times t = 30 s, 60 s, 90 s, 120 s, 150 s and 180 s.

[1]

(b) (i) Repeat step **(a)**, using beaker **B**. [1]

(ii) Complete the headings and the time column in the table. [2]

View solution

Table 1.1

	beaker **A**	beaker **B**
t/	θ/	θ/
0		

(c) Describe a precaution that you took to ensure that the temperature readings were as reliable as possible in the experiment.

.....

.....[1]

(d) **(i)** Write a conclusion stating how increasing the surface area of the hot water affects the rate of cooling of the water. Justify your answer by reference to your results.

.....

.....

.....

.....

.....

.....[2]

(ii) Suggest a change to the apparatus to make the comparison of the effect of surface area on cooling a fairer test.

Explain why this change is an improvement and state the likely effect on the recorded temperatures.

change .....

.....

explanation .....

.....

effect on temperatures .....

.....

[3]

(e) Students in other classrooms are carrying out the same experiment.

Suggest a factor that they should all keep the same if they are to obtain temperature readings that are similar to your readings.

.....

.....[1]

[Total: 11]

View solution

© UCLES 2016

2 In this experiment, you will investigate the resistance of a lamp.

The circuit has been set up for you. Carry out the following instructions, referring to Fig. 2.1.

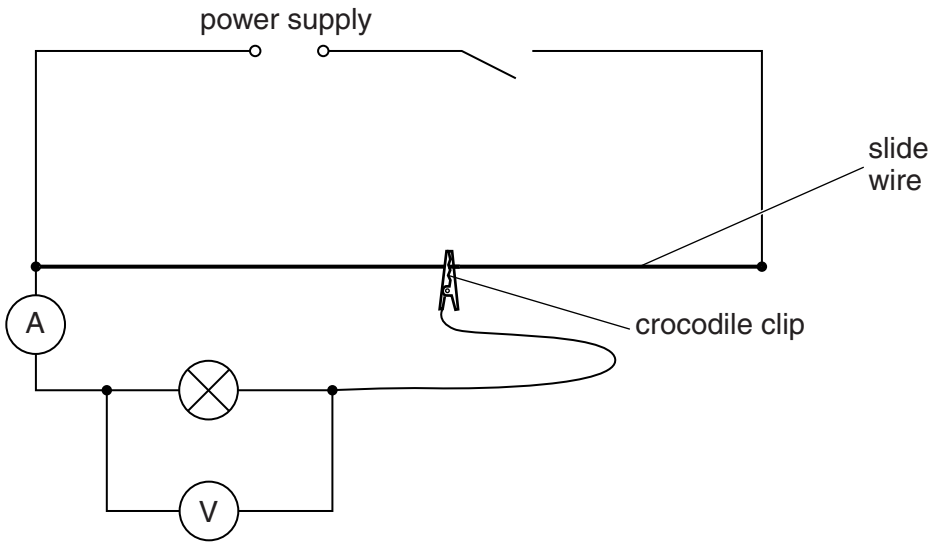

Fig. 2.1

(a)
- Switch on.
- Adjust the position of the crocodile clip on the slide wire until the potential difference V across the lamp is 0.2V.
- Record, in Table 2.1, the value of the current I shown on the ammeter.
- Move the crocodile clip and record values of I for V = 0.8V, 1.4V, 2.0V and 2.6V.
- Switch off.

[2]

(b) Calculate, and record in the table, the resistance R of the lamp at each value of V.
Use the equation $R = \frac{V}{I}$.

[1]

Table 2.1

V/V	I/A	R/Ω
0.2		
0.8		
1.4		
2.0		
2.6		

© UCLES 2016

(c) Plot a graph of R/Ω (y-axis) against V/V (x-axis).

View solution

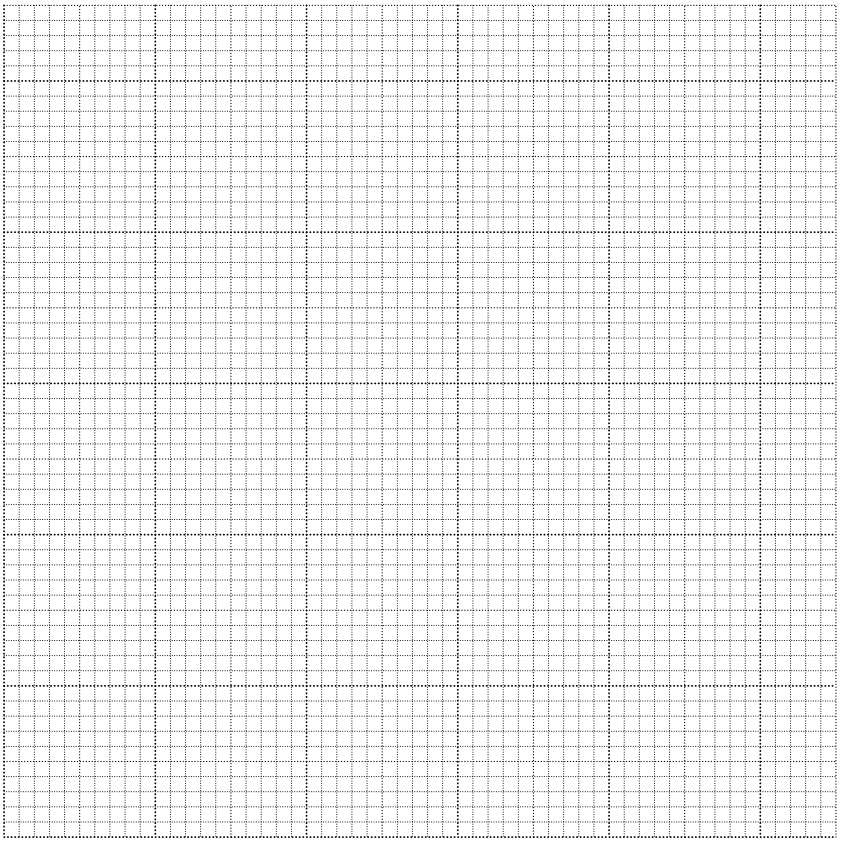

[4]

(d) State what the shape of the graph tells you about the change, if any, in the resistance of the lamp during the experiment.

.....

.....

.....

.....[2]

View solution

Question 2 continues on the next page.

(e) In this type of experiment, it is possible to change the current and potential difference for the lamp by using a variable resistor rather than a slide wire.

On Fig. 2.2, complete the circuit diagram to show a variable resistor used for this purpose.

View solution

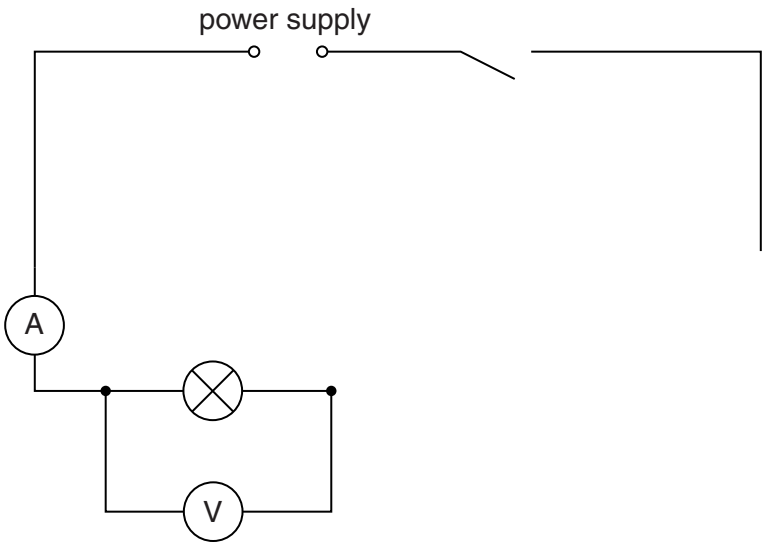

Fig. 2.2

[2]

[Total: 11]

BLANK PAGE

© UCLES 2016

3 In this experiment, you will determine the focal length of a converging lens by two different methods.

Carry out the following instructions, referring to Fig. 3.1.

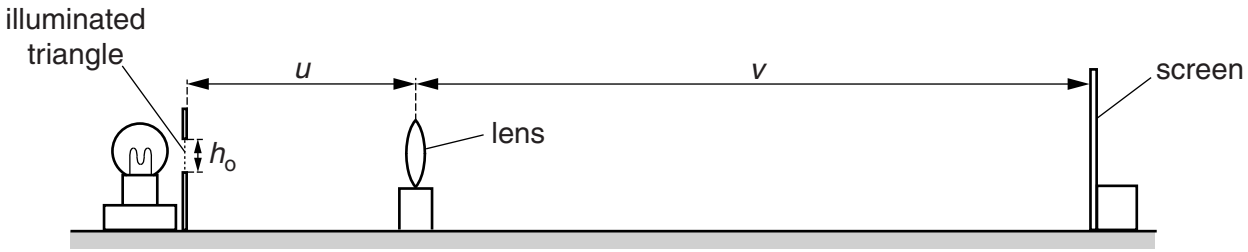

Fig. 3.1

(a) Arrange the apparatus as shown in Fig. 3.1.

Set the distance u between the illuminated triangle and the lens to 30.0 cm.

Place the screen near the lens. Move the screen until a sharp image of the triangle is seen on the screen.

(i) • Measure h_o, the height of the illuminated triangle, as indicated in Fig. 3.1.

h_o = ...

• Measure h_I, the height of the image on the screen.

h_I = ...

[1]

(ii) Calculate a value M for the magnification, using the equation $M = \frac{h_I}{h_o}$.

M = ...[2]

(iii) Calculate a value f_1 for the focal length of the lens, using the equation $f_1 = \frac{uM}{(M+1)}$.

f_1 = ...[2]

(iv) Describe one difficulty experienced when measuring the height of the image on the screen.

Suggest an improvement to the apparatus to overcome this difficulty.

View solution

difficulty .....

.....

improvement .....

.....

[2]

(b) Adjust the position of the lens so that $u = 40.0\,\text{cm}$.

View solution

Move the screen until a sharp image of the triangle is seen on the screen.

(i) Measure the distance v between the lens and the screen, as indicated in Fig. 3.1.

$v =$ .....[1]

(ii) Calculate a second value f_2 for the focal length of the lens, using the equation

$$f_2 = \frac{uv}{(u + v)}.$$

View solution

$f_2 =$ .....[1]

(iii) A student suggests that f_1 and f_2 should be equal.

View solution

State whether your results support this suggestion. Justify your statement with reference to your results.

.....

.....

.....

.....[1]

(c) State one precaution, not included in your answer to **(a)(iv)**, that should be taken to make the experiment reliable.

.....

.....[1]

[Total: 11]

View solution

4 A student has noticed that different types of paper have different strengths.

Plan an experiment which will enable you to compare the strengths of different samples of thin paper, prepared as shown in Fig. 4.1. You are **not** required to carry out the experiment.

View solution

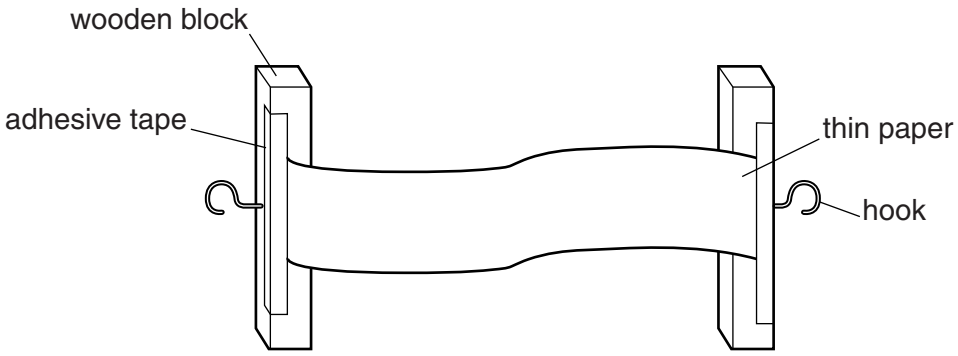

Fig. 4.1

Write a plan for the experiment, including:

- the additional apparatus needed
- instructions for carrying out the experiment, including any precautions you will take
- what you will measure
- how you will present your results
- how you will determine which paper is the strongest
- the variables you will keep the same to ensure the comparison is a fair test.

You may draw a diagram if it helps to explain your plan.

.....

.....

© UCLES 2016

.....

.....

.....

BLANK PAGE

Permission to reproduce items where third-party owned material protected by copyright is included has been sought and cleared where possible. Every reasonable effort has been made by the publisher (UCLES) to trace copyright holders, but if any items requiring clearance have unwittingly been included, the publisher will be pleased to make amends at the earliest possible opportunity.

To avoid the issue of disclosure of answer-related information to candidates, all copyright acknowledgements are reproduced online in the Cambridge International Examinations Copyright Acknowledgements Booklet. This is produced for each series of examinations and is freely available to download at www.cie.org.uk after the live examination series.

Cambridge International Examinations is part of the Cambridge Assessment Group. Cambridge Assessment is the brand name of University of Cambridge Local Examinations Syndicate (UCLES), which is itself a department of the University of Cambridge.