Cambridge IGCSE

Cambridge International Examinations
Cambridge International General Certificate of Secondary Education

CANDIDATE NAME									
CENTRE NUMBER						CANDIDATE NUMBER			

PHYSICS **0625/62**

Paper 6 Alternative to Practical **October/November 2016**

1 hour

Candidates answer on the Question Paper.

No Additional Materials are required.

READ THESE INSTRUCTIONS FIRST

Write your Centre number, candidate number and name on all the work you hand in.
Write in dark blue or black pen.
You may use an HB pencil for any diagrams or graphs.
Do not use staples, paper clips, glue or correction fluid.
DO **NOT** WRITE IN ANY BARCODES.

Answer **all** questions.

Electronic calculators may be used.
You may lose marks if you do not show your working or if you do not use appropriate units.

At the end of the examination, fasten all your work securely together.
The number of marks is given in brackets [ ] at the end of each question or part question.

The syllabus is approved for use in England, Wales and Northern Ireland as a Cambridge International Level 1/Level 2 Certificate.

This document consists of **12** printed pages.

© UCLES 2016

CAMBRIDGE International Examinations

1 A student is determining the weight of a load using a balancing method.

Fig. 1.1 shows the apparatus. It is not drawn to scale.

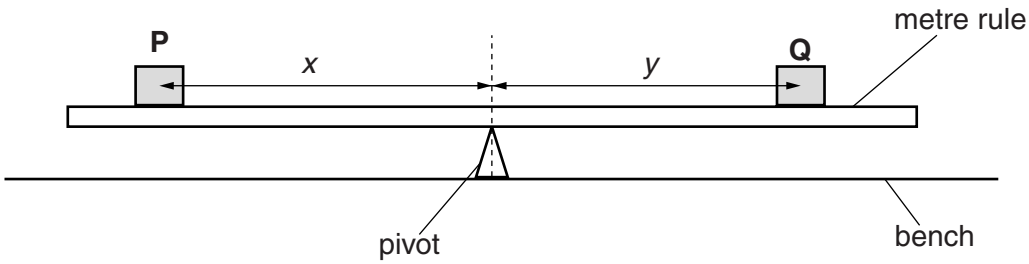

Fig. 1.1 (not to scale)

(a) The student places the metre rule on the pivot and adjusts its position so that the metre rule is as near as possible to being balanced. He records the scale reading of the metre rule at the point where the rule balances on the pivot.

scale reading = 50.2 cm

He places a 2.00 N load **P** on the metre rule so that its centre is exactly at the 20.0 cm mark on the rule.

View solution

(i) Use this information to determine the distance *x*.

x = ... cm [1]

(ii) Explain how you would ensure that the centre of the load **P** is exactly at the 20.0 cm mark on the rule. You may draw a diagram.

View solution

.....

.....

.....

.....[2]

(b) The student places a load **Q** on the metre rule and adjusts its position so that the metre rule is as near as possible to being balanced.


View solution

He measures the distance y between the centre of load **Q** and the pivot.

$y =$ 15.3 cm

Calculate the weight W of load **Q** using the equation $W = \frac{kx}{y}$, where $k = 2.00\,\text{N}$.

$W =$ .....[1]

(c) The student repeats the procedure using a different, suitably chosen, distance x.


View solution

Suggest a suitable distance x.

$x =$ .....cm [1]

(d) The student calculates a new value of W.


View solution

$W =$ 4.04 N

Suggest two reasons why the values determined for W may not be the same.

1. .....

2. .....

[2]

(e) Calculate the average W_{AV} of the values for W, the weight of load **Q**. Give your answer to a suitable number of significant figures for this experiment.


View solution

$W_{AV} =$ .....N [2]

[Total: 9]

2 A student is investigating the resistance of a resistor.

The circuit is shown in Fig. 2.1. **AB** and **CD** are lengths of resistance wire.

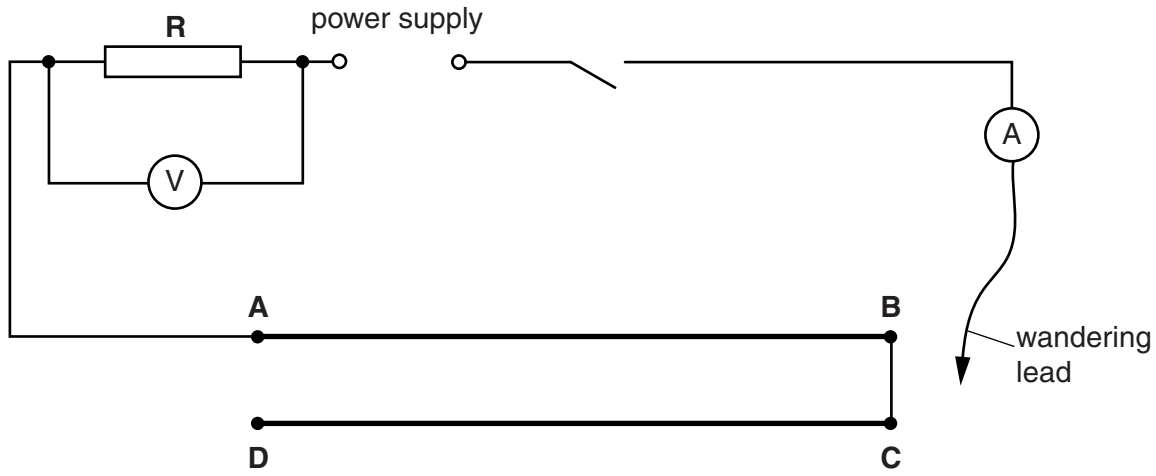

Fig. 2.1

(a) The student connects the wandering lead to point **B** in the circuit. The readings of potential difference V_1 and current I_1 are shown in Figs. 2.2 and 2.3.

View solution

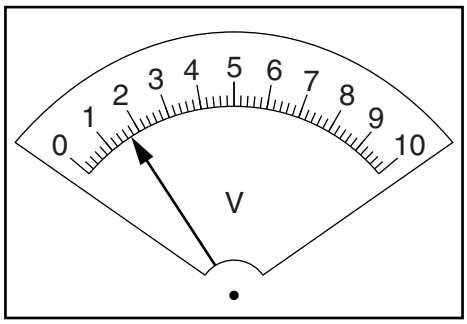

Fig. 2.2

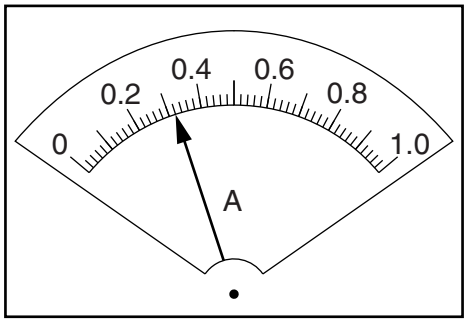

Fig. 2.3

(i) Record the readings shown on the meters.

V_1 = ...

I_1 = ...

[2]

(ii) Calculate the resistance R of the resistor **R** using the equation $R = \frac{V_1}{I_1}$.

View solution

R = ...[1]

(b) The student connects the wandering lead to point **D** in the circuit and repeats the readings.

She connects points **A** and **D** together. She connects the wandering lead to point **B** and repeats the readings.

View solution

Finally, she connects the wandering lead to point **A** and repeats the readings.

The new values for the resistance R of resistor **R** that she obtains are:

R = 4.96 Ω, 5.12 Ω, 4.89 Ω

A student suggests that the resistance R should be constant throughout the experiment.

State whether the results agree with this suggestion. Justify your answer by reference to the results.

statement .....

justification .....

.....

.....

[2]

(c) **(i)** Name a component that could be used to control the current in the circuit, in place of the wires **AB** and **CD**.

.....[1]

(ii) In the space below, draw the circuit with this component in place of the wires **AB** and **CD**. Show one end of the component connected at **A** and the wandering lead connected to the other end of the component.

View solution

[2]

[Total: 8]

© UCLES 2016

3 **(a)** A student hangs a mass on a spring and observes it as it oscillates up and down.

The student wants to find the factors that affect the time taken for one complete oscillation. She finds that increasing the mass increases the time.

View solution

Suggest two other variables that the student could investigate.

1. .....

2. .....

[2]

(b) Another student is investigating the oscillations of the pendulum shown in Fig. 3.1.

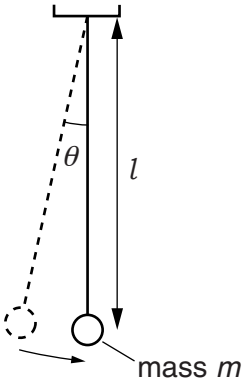

Fig. 3.1

The variables are

- the length l of the pendulum
- the mass m of the pendulum bob
- the amplitude θ of the swing.

The time taken for one complete oscillation is called the period T.

She carries out three experiments. Each experiment investigates the effect on the period T of changing one variable.

© UCLES 2016

Her results are shown in Tables 3.1, 3.2 and 3.3.

Table 3.1

l/m	T/s
0.200	0.89
0.400	1.25
0.600	1.54
0.800	1.78
1.000	1.99

Table 3.2

m/g	T/s
50	1.40
60	1.42
70	1.39
80	1.41
90	1.38

Table 3.3

θ/°	T/s
4	2.00
6	1.98
8	2.06
10	2.02
12	1.97

View solution

(i) Study the results tables and use words from this list to complete the sentences.

increases

decreases

has no effect on

is proportional to

- An increase in length l ..... the period T.
- An increase in mass m ..... the period T.
- An increase in amplitude θ ..... the period T.

[3]

(ii) Suggest a precaution you would take in this pendulum experiment to obtain T values that are as reliable as possible.

.....

.....

.....[1]

[Total: 6]

View solution

4 A student is investigating whether using a lid reduces the time taken to heat a beaker of water to boiling point.

View solution

The student has the following apparatus available:

thermometer
250 cm^3 glass beaker
250 cm^3 measuring cylinder
heatproof mat
lid to fit the beaker
clamp, boss and stand.

Plan an experiment to investigate whether using a lid reduces the heating time.

You should

- list the additional apparatus that you would require
- explain briefly how you would carry out the investigation
- state the key variables that you would control
- draw a table, with column headings, to show how you would display your readings; you are not required to enter any readings in the table
- explain how you would use your readings to reach a conclusion.

A diagram is not required but you may draw a diagram if it helps your explanation.

.....

.....

© UCLES 2016

.....

.....

.....

5 A student is investigating reflection using a plane mirror.

Fig. 5.1 shows the student's ray-trace sheet.

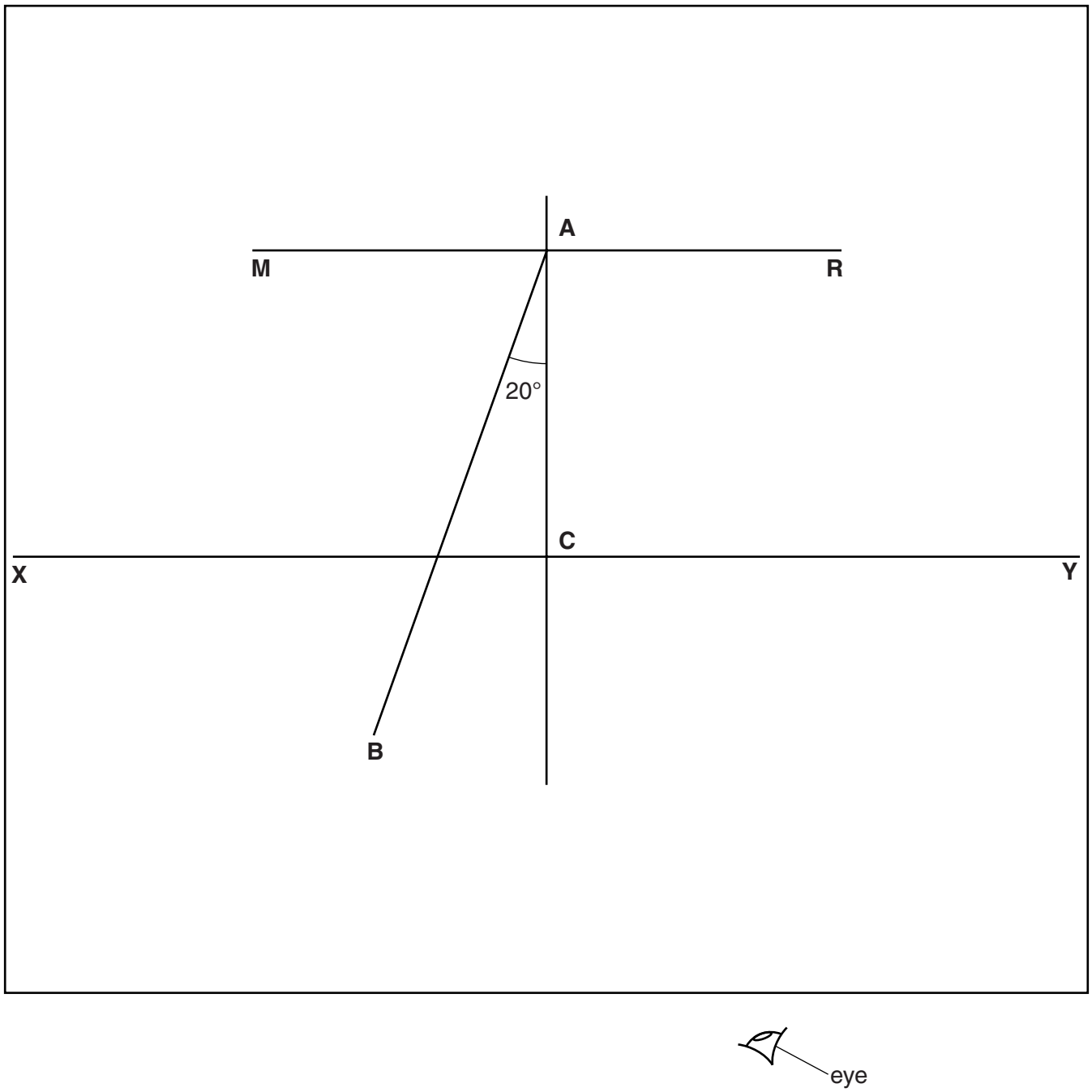

Fig. 5.1

(a) The line **MR** marks the position of the mirror. The student draws another line **XY** parallel to line **MR**. He draws a line from **A** at an angle of incidence $i = 20°$. He labels the end of this line **B**. The student places a pin P_1 at point **B**. He places a pin P_2 on line **AB** at a suitable distance from pin P_1 to produce a ray trace.

(i) On Fig. 5.1, measure the length l of line **AB**.

View solution

l = ...[1]

(ii) On Fig. 5.1, mark with a cross (x) a suitable position for pin P_2. [1]

© UCLES 2016

(b) The student views the images of pins P_1 and P_2 from the direction indicated by the eye in Fig. 5.1. He places two pins P_3 and P_4, a suitable distance apart, so that pins P_3 and P_4, and the images of P_2 and P_1, all appear exactly one behind the other.

He draws a line joining the positions of P_3 and P_4. He labels the point at which this line crosses **XY** with the letter **D**. He measures the distance *d* between **C** and **D**.

He repeats the procedure using *i* values of 0°, 30°, 40°, 50° and 60°. The readings are shown in Table 5.1.

View solution

Table 5.1

i/°	*d*/cm
0	0.0
20	1.8
30	2.9
40	4.2
50	6.0
60	8.7

Plot a graph of *d*/cm (*y*-axis) against *i*/° (*x*-axis).

[4]

(c) A student suggests that *i* should be directly proportional to *d*.

State whether the graph supports this suggestion. Justify your answer by reference to the graph.

statement .....

justification .....

.....

[2]

(d) Suggest two practical difficulties in obtaining accurate readings in this experiment.

View solution

1. .....

.....

2. .....

.....

[2]

[Total: 10]

Permission to reproduce items where third-party owned material protected by copyright is included has been sought and cleared where possible. Every reasonable effort has been made by the publisher (UCLES) to trace copyright holders, but if any items requiring clearance have unwittingly been included, the publisher will be pleased to make amends at the earliest possible opportunity.

To avoid the issue of disclosure of answer-related information to candidates, all copyright acknowledgements are reproduced online in the Cambridge International Examinations Copyright Acknowledgements Booklet. This is produced for each series of examinations and is freely available to download at www.cie.org.uk after the live examination series.

Cambridge International Examinations is part of the Cambridge Assessment Group. Cambridge Assessment is the brand name of University of Cambridge Local Examinations Syndicate (UCLES), which is itself a department of the University of Cambridge.