Cambridge IGCSE

Cambridge International Examinations
Cambridge International General Certificate of Secondary Education

CANDIDATE NAME									
CENTRE NUMBER						CANDIDATE NUMBER			

PHYSICS **0625/32**

Paper 3 Theory (Core) **October/November 2017**

1 hour 15 minutes

Candidates answer on the Question Paper.

No Additional Materials are required.

READ THESE INSTRUCTIONS FIRST

Write your Centre number, candidate number and name on all the work you hand in.
Write in dark blue or black pen.
You may use an HB pencil for any diagrams or graphs.
Do not use staples, paper clips, glue or correction fluid.
DO **NOT** WRITE IN ANY BARCODES.

Answer **all** questions.
Electronic calculators may be used.
You may lose marks if you do not show your working or if you do not use appropriate units.
Take the weight of 1.0 kg to be 10 N (acceleration of free fall = 10 m/s^2).

At the end of the examination, fasten all your work securely together.
The number of marks is given in brackets [ ] at the end of each question or part question.

The syllabus is approved for use in England, Wales and Northern Ireland as a Cambridge International Level 1/Level 2 Certificate.

This document consists of **15** printed pages and **1** blank page.

© UCLES 2017

CAMBRIDGE International Examinations

1 **(a)** Nuclear power stations generate electricity.

Which of these statements describe an advantage of using nuclear power stations, and which of them describe a disadvantage?

View solution

Put a tick (✓) in the correct column for each statement. The first one is done for you.

statement	advantage	disadvantage
nuclear power stations require high levels of security		✓
nuclear power stations produce small amounts of carbon dioxide		
nuclear power stations have a small effect on climate change		
waste radioactive material can take a very long time to decay		

[3]

(b) Describe how electricity may be generated using geothermal resources.

View solution

.....

.....

.....

.....

.....

.....

..... [3]

[Total: 6]

© UCLES 2017

2 Fig. 2.1 shows a speed-time graph for a ship starting to move.

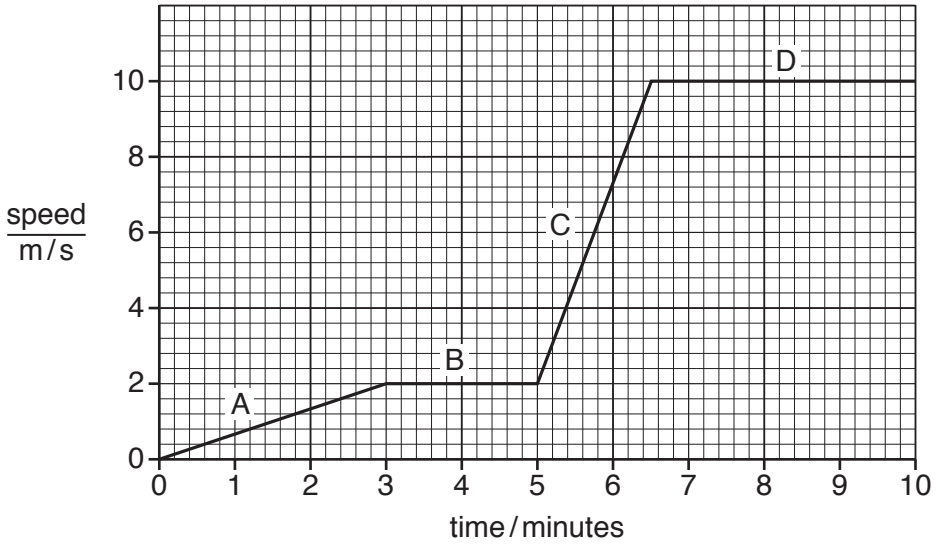

Fig. 2.1

(a) Describe the motion of the ship during each section of the graph.

View solution

A .....

.....

B .....

.....

C .....

.....

D .....

..... [4]

(b) Determine the distance travelled by the ship in section B of the graph.

View solution

distance = ... m [3]

[Total: 7]

3 Fig. 3.1 shows a glass vase used for displaying flowers.



Fig. 3.1

(a) The mass of the glass is 450 g. The volume of glass in the vase is 145 cm^3.

View solution

(i) Calculate the density of the glass.

density = ... g/cm^3 [3]

(ii) Calculate the weight of the glass.

View solution

weight = ... N [3]

(b) Another vase has a weight of 30 N. The area of the base in contact with a table is 80.0 cm^2.

Calculate the pressure this vase exerts on the table.

View solution

pressure = ... N/cm^2 [3]

[Total: 9]

© UCLES 2017

4 Fig. 4.1 shows a fairground ride.

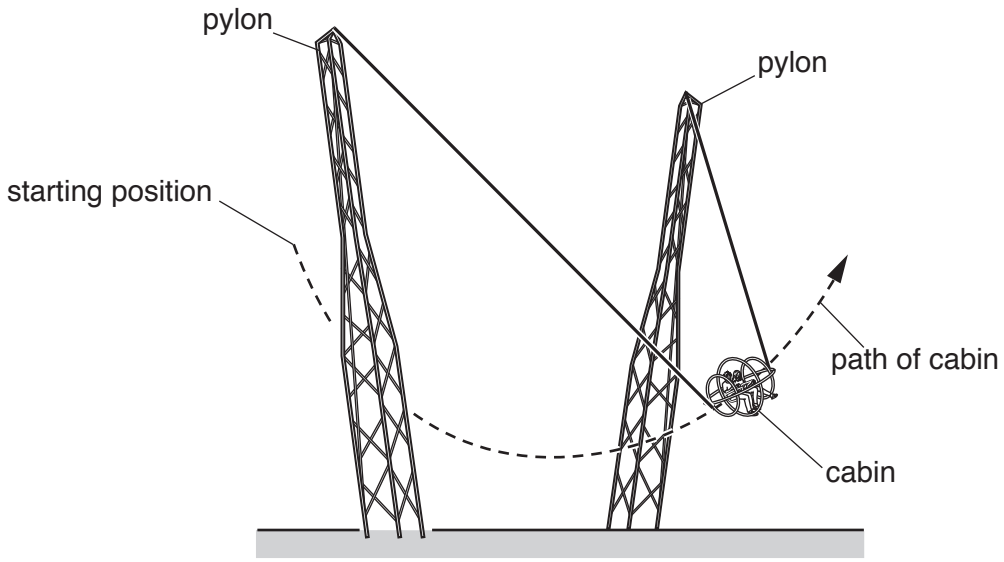

Fig. 4.1

People sit inside a cabin suspended between two pylons. The cabin is lifted to the starting position shown in Fig. 4.1.

(a) State the name of the type of energy gained by the cabin as it rises.

View solution

..... [1]

(b) The cabin is released and swings down between the two pylons. The path of the cabin is shown on Fig. 4.1. The cabin has maximum kinetic energy at one point on its path. Draw this point on Fig. 4.1 and label this point X. [1]

(c) A force opposes the motion of the cabin as it falls. State the name of this force.

View solution

..... [1]

(d) After a few swings, a brake system stops the cabin (not shown on the diagram). Use ideas about energy transfer to suggest how the brake system stops the cabin.

View solution

.....

.....

.....

..... [3]

[Total: 6]

© UCLES 2017

5 A cup made from plastic, containing a hot drink, is shown in Fig. 5.1.

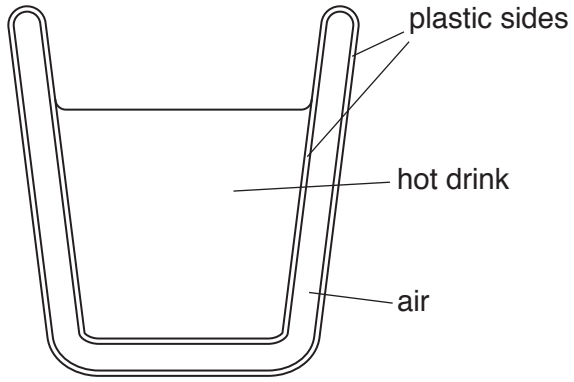

Fig. 5.1

(a) State the term given to materials that reduce the transfer of thermal energy.

View solution

..... [1]

(b) The hot drink gradually cools.

Describe and explain **two** processes by which thermal energy is transferred from the hot drink.

.....

.....

.....

.....

.....

.....

.....

..... [5]

[Total: 6]

View solution

© UCLES 2017

6 Fig. 6.1 shows a ray of light reflected from mirror 1 at point P and striking mirror 2 at point Q.

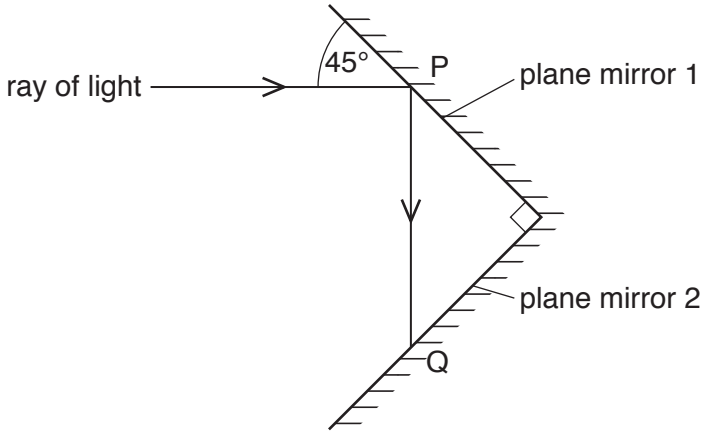

Fig. 6.1

View solution

(a) On Fig. 6.1,

- clearly mark the position of the normal at Q,
- draw the ray reflected from point Q,
- mark the angle of reflection at Q using the letter *r*,

State the law you used to draw the reflected ray.

.....

[4]

(b) Compare the direction of the ray reflected from mirror 2 at Q with the direction of the ray incident on mirror 1 at P. Tick **one** box.

View solution

The ray of light reflected from mirror 2 is

- ☐ parallel to the incident ray at P,
- ☐ perpendicular to the incident ray at P,
- ☐ at an angle of 45° to the incident ray at P. [1]

© UCLES 2017

(c) A thin, converging lens forms an image, I, of an object, O, as shown in Fig. 6.2.

View solution

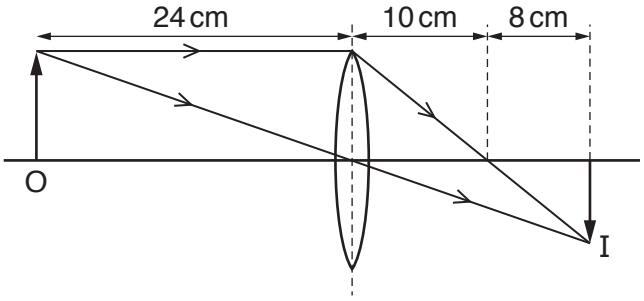

Fig. 6.2

(i) On Fig. 6.2, label a principal focus of the lens, using the letter **F**. [1]

(ii) State the focal length of the lens.

View solution

focal length = ... cm [1]

[Total: 7]

© UCLES 2017

7 Fig. 7.1 shows the regions of the electromagnetic spectrum.

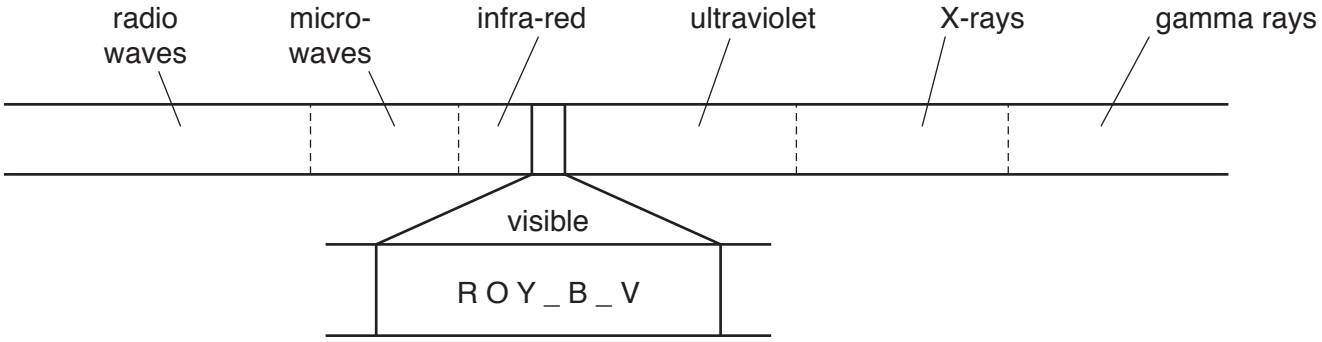

Fig. 7.1

(a) Fig. 7.1 shows the first letter of some colours in the visible part of the spectrum.

State which colours are missing.

..... and ..... [1]

(b) State the names of the regions of the electromagnetic spectrum that are used in

(i) communications,

..... and ..... [1]

(ii) remote controls for televisions and DVD players.

..... [1]

(c) Describe how high levels of microwave energy can be dangerous to people.

.....

..... [1]

(d) State **two** safety precautions required when using X-rays.

1. .....

2. ..... [2]

[Total: 6]

8 **(a)** An atom of carbon contains protons, neutrons and electrons.

View solution

Indicate where each particle is found in the atom. Place a tick in the appropriate box.

particle	in the nucleus	orbiting the nucleus
electron		
neutron		
proton		

[3]

(b) An atom of carbon contains 6 protons, 7 neutrons and 6 electrons.

View solution

(i) State the proton number of the carbon.

..... [1]

(ii) State the nucleon number of the carbon.

View solution

..... [1]

(c) Carbon has many different isotopes.

View solution

(i) Explain the meaning of the term *isotope*.

.....

.....

..... [2]

(ii) The nuclide notation for the carbon in **(b)** is $^{13}_{6}C$.

View solution

Suggest the nuclide notation for another possible isotope of carbon.

..... [1]

[Total: 8]

© UCLES 2017

9 Some metals can be used to make permanent magnets.

(a) Identify the metal that can form a permanent magnet.
Tick **one** box.

View solution

☐ copper ☐ iron ☐ steel [1]

(b) Fig. 9.1 shows a circuit that is used to make a permanent magnet.

View solution

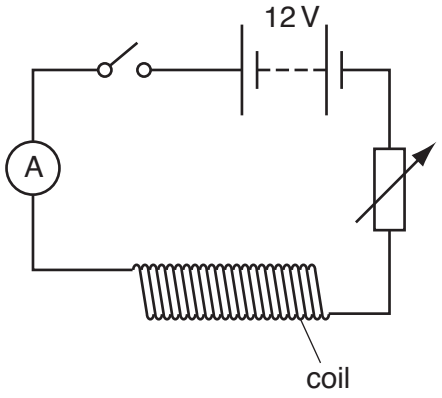

Fig. 9.1

(i) On Fig. 9.1, label the variable resistor with the letter X. [1]

(ii) Describe how the circuit is used to make a permanent magnet.

View solution

.....

.....

..... [3]

(c) Fig. 9.2 shows the coil from Fig. 9.1.

View solution

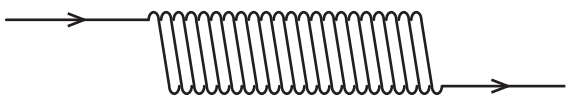

Fig. 9.2

On Fig. 9.2 carefully sketch the pattern of the magnetic field produced by the coil. [2]

[Total: 7]

10 Fig. 10.1 shows a series circuit.

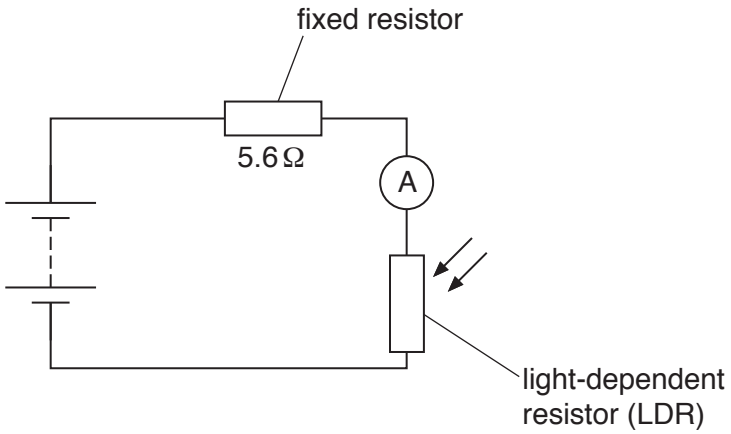

Fig. 10.1

(a) In dim light, the resistance of the LDR is 20.0 Ω.

View solution

(i) The resistance of the battery and ammeter can be ignored.

Calculate the resistance of the circuit.

resistance = ... Ω [1]

(ii) The current in the circuit is 0.23 A.

View solution

Calculate the potential difference across the fixed resistor.

potential difference (voltage) = ... V [3]

(b) A bright light shines on to the LDR.

View solution

State and explain what happens to the current in the circuit.

.....

..... [2]

[Total: 6]

© UCLES 2017

11 Fig. 11.1 shows a charger for a mobile (cell) phone. The charger contains a transformer.

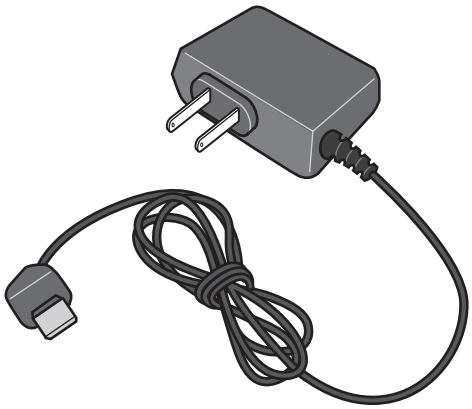

Fig. 11.1

(a) The primary coil of the transformer has 900 turns and the secondary coil has 49 turns. The input voltage to the transformer is 220 V.

View solution

Calculate the output voltage.

output voltage = ... V [3]

(b) State the name of the metal used to make the coils of the transformer.

View solution

..... [1]

(c) A transformer uses an alternating current (a.c.).

View solution

Describe the difference between alternating current (a.c.) and direct current (d.c.).

.....

.....

..... [1]

[Total: 5]

© UCLES 2017

12 Fig. 12.1 shows some equipment used in a demonstration.

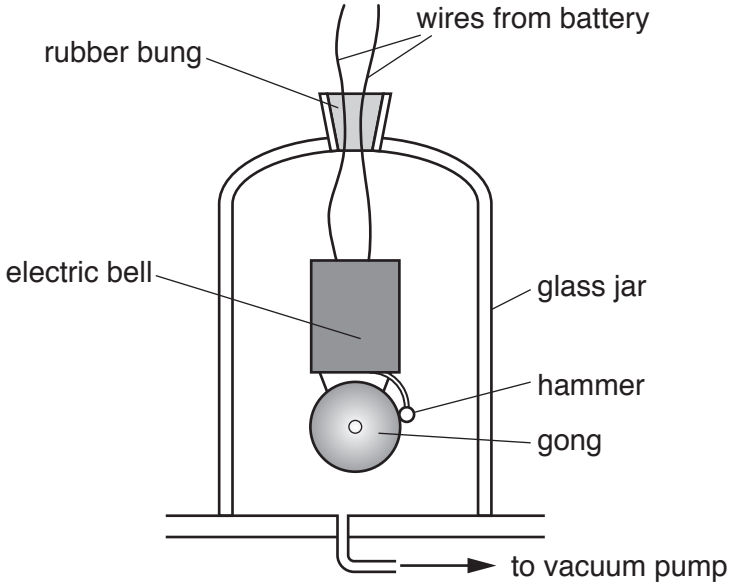

Fig. 12.1

View solution

The glass jar is connected to a vacuum pump. The electric bell is switched on. The observers see and hear the bell working.

(a) (i) The vacuum pump removes air from the glass jar. State what the observers see and what they hear after the air is removed.

observers see .....

.....

observers hear .....

..... [2]

(ii) State what the demonstration in **(a)(i)** shows about the transmission of sound waves.

View solution

.....

.....

..... [2]

(iii) When the bell is working, the hammer strikes the gong. Describe how the gong produces the sound.

.....

..... [1]

View solution

(b) Indicate the lowest and highest frequencies that can be heard by the human ear.

View solution

Tick **one** box from each column.

lowest frequency	highest frequency
☐ 2 Hz	☐ 20 kHz
☐ 20 Hz	☐ 200 kHz
☐ 200 Hz	☐ 2 MHz
☐ 2 kHz	☐ 20 MHz

[2]

[Total: 7]

BLANK PAGE

Permission to reproduce items where third-party owned material protected by copyright is included has been sought and cleared where possible. Every reasonable effort has been made by the publisher (UCLES) to trace copyright holders, but if any items requiring clearance have unwittingly been included, the publisher will be pleased to make amends at the earliest possible opportunity.

To avoid the issue of disclosure of answer-related information to candidates, all copyright acknowledgements are reproduced online in the Cambridge International Examinations Copyright Acknowledgements Booklet. This is produced for each series of examinations and is freely available to download at www.cie.org.uk after the live examination series.

Cambridge International Examinations is part of the Cambridge Assessment Group. Cambridge Assessment is the brand name of University of Cambridge Local Examinations Syndicate (UCLES), which is itself a department of the University of Cambridge.

© UCLES 2017