Cambridge IGCSE

Cambridge International Examinations
Cambridge International General Certificate of Secondary Education

CANDIDATE NAME									
CENTRE NUMBER						CANDIDATE NUMBER			

PHYSICS **0625/33**

Paper 3 Theory (Core) **October/November 2017**

1 hour 15 minutes

Candidates answer on the Question Paper.

No Additional Materials are required.

READ THESE INSTRUCTIONS FIRST

Write your Centre number, candidate number and name on all the work you hand in.
Write in dark blue or black pen.
You may use an HB pencil for any diagrams or graphs.
Do not use staples, paper clips, glue or correction fluid.
DO **NOT** WRITE IN ANY BARCODES.

Answer **all** questions.
Electronic calculators may be used.
You may lose marks if you do not show your working or if you do not use appropriate units.
Take the weight of 1.0 kg to be 10 N (acceleration of free fall = 10 m/s^2).

At the end of the examination, fasten all your work securely together.
The number of marks is given in brackets [ ] at the end of each question or part question.

The syllabus is approved for use in England, Wales and Northern Ireland as a Cambridge International Level 1/Level 2 Certificate.

This document consists of **16** printed pages.

© UCLES 2017

1 **(a)** A student determines the speed of three cars on a straight road.
The student measured the time for the cars to travel 50 m.

View solution

The table shows the measurements.

car	distance travelled / m	time taken / s
A	50	3.2
B	50	4.0
C	50	3.6

(i) Without calculation, identify the fastest car and the slowest car.

Complete the table.

	car
the fastest car	
the slowest car	

[2]

(ii) Calculate the speed of car **B**.

View solution

speed = ... m / s [3]

(b) **(i)** Estimate the time, in minutes, for car **C** to travel 5000 m.

View solution

estimated time = ... minutes [2]

(ii) Explain why your answer in **(b)(i)** may not be the same as the actual time taken for the car to travel 5000 m.

.....

..... [1]

[Total: 8]

View solution

© UCLES 2017

2 Fig. 2.1 shows a metal object discovered by a scientist using a metal detector.

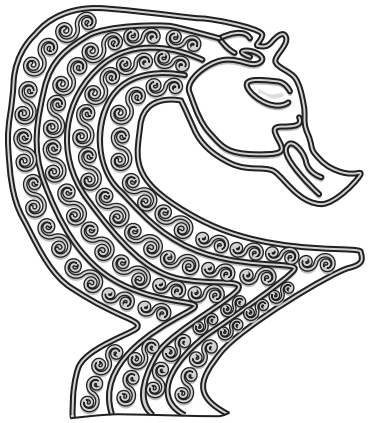

Fig. 2.1

View solution

The scientist wants to know the type of metal from which the object is made. She needs to find the density of the metal.

(a) Describe how the scientist can measure the volume of the object, using the method of displacement.

.....

.....

.....

.....

.....

..... [4]

(b) The mass of the metal object is 347 g and its volume is 18 cm^3.

View solution

Calculate the density of the metal.

density = ... g/cm^3 [3]

[Total: 7]

3 Fig. 3.1 shows a large box with a heavy lid.

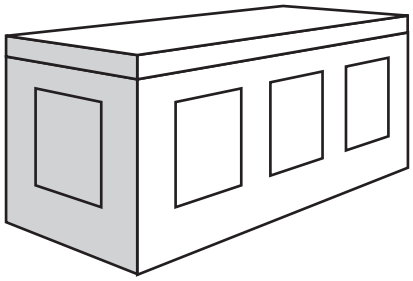

Fig. 3.1

(a) The weight of the box is 2250 N.

Calculate the mass of the box.

mass = ... kg [3]

(b) A man wants to lift the lid of the box. He puts a strong metal bar between the box and the lid. He applies a force to the bar as shown in Fig. 3.2.

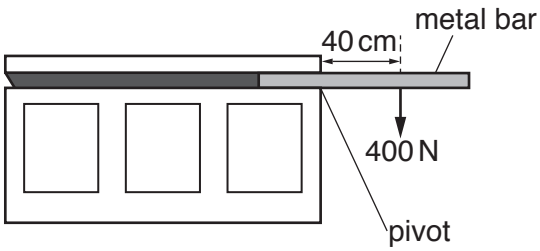

Fig. 3.2

(i) Calculate the moment of his force about the pivot. State the unit.

moment = ... [4]

(ii) The moment in **(b)(i)** is not sufficient to lift the lid. Describe how the man can increase the moment, using the same force.

.....

..... [1]

[Total: 8]

© UCLES 2017

4 A catapult consists of a rubber band attached to a handle. A student uses the catapult to fire a ball towards a target. Fig. 4.1 shows the catapult just before the student releases the rubber band.

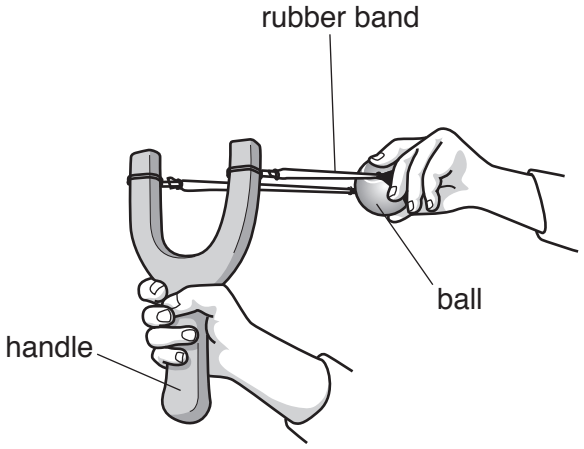

Fig. 4.1

(a) When the student releases the rubber band, the ball moves towards the target.

Complete the following sentences about energy transfers during this process. Use words from the box. You may use each word once, more than once or not at all.

View solution

elastic	force	friction	gravitational	kinetic	thermal

(i) As the rubber band is pulled back, the work done is transferred into ..... potential energy. [1]

(ii) When the student releases the rubber band, the ball moves forward horizontally. Stored ..... potential energy is transferred into ..... energy. [2]

(iii) As the ball travels through the air there is friction with air molecules. This causes some of the ball's ..... energy to be transferred into ..... energy. [2]

© UCLES 2017

(b) The ball does not reach the target, as shown in Fig. 4.2.

View solution



Fig. 4.2

Describe how the student can increase the energy of the ball, using the same catapult.

..... [1]

[Total: 6]

© UCLES 2017

5 A vehicle may have tyres of type **A** or type **B**, as shown in Fig. 5.1.

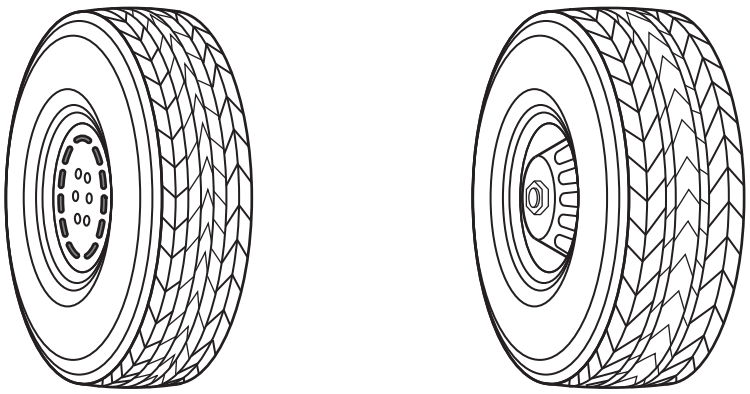

type A **type B**

Fig. 5.1

(a) State and explain the type of tyre that is suitable for travelling over soft ground.

View solution

.....

.....

.....

..... [3]

(b) The temperature of the air in a tyre increases. This affects the motion of the air molecules in the tyre.

Describe and explain the changes.

View solution

.....

.....

.....

.....

..... [3]

[Total: 6]

6 Fig. 6.1 shows a liquid-in-glass thermometer.

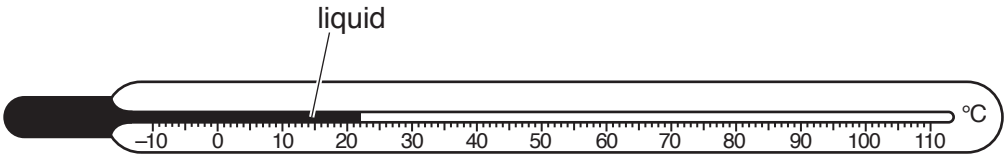

Fig. 6.1

View solution

(a) (i) Which of these metals is often used for the liquid in thermometers?
Tick the correct box.

☐ magnesium

☐ mercury

☐ silver [1]

(ii) The thermometer is placed inside a freezer containing ice.
Suggest the temperature of the ice. Draw an arrow on Fig. 6.1. [1]

(iii) A thermometer is calibrated using two fixed points. State the temperatures of the two fixed points.

lower fixed point = ... °C

upper fixed point = ... °C [1]

(b) The sentences are about thermal processes.
Complete each sentence. Use words from the box. Each word may be used once, more than once or not at all.

View solution

conductor	convection	emitter	insulator	radiation	reflection

- A dull black surface is a good .....
- Copper is used to make pans because it is a good thermal .....
- In fluids, thermal energy is transferred mainly by .....
- Thermal energy reaches Earth from the Sun by means of .....

[4]

[Total: 7]

© UCLES 2017

7 Fig. 7.1 shows a floating plastic ball attached by a long rope to a weight on the bottom of a lake. A water wave on the surface of the lake causes the ball to move vertically up and down.

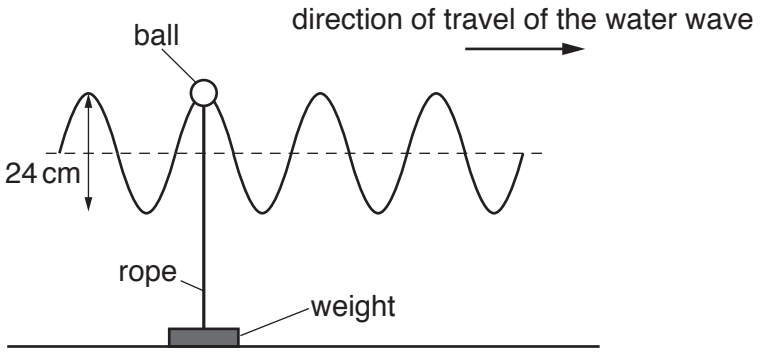

Fig. 7.1

View solution

(a) On Fig. 7.1, indicate the wavelength of the wave. Label the distance *W*. [1]

(b) Determine the amplitude of the wave.

View solution

amplitude = ... cm [1]

(c) The ball reaches its maximum height 40 times in 60 seconds. Calculate the frequency of the wave.

View solution

frequency = ... Hz [2]

(d) Explain how the motion of the ball shows that the water wave is transverse.

View solution

.....

.....

..... [1]

(e) State another example of a transverse wave.

..... [1]

[Total: 6]

View solution

8 Fig 8.1 shows two parallel rays of light that pass through a thin converging lens. The diagram is incomplete. There is a principal focus at f_1 and at f_2.

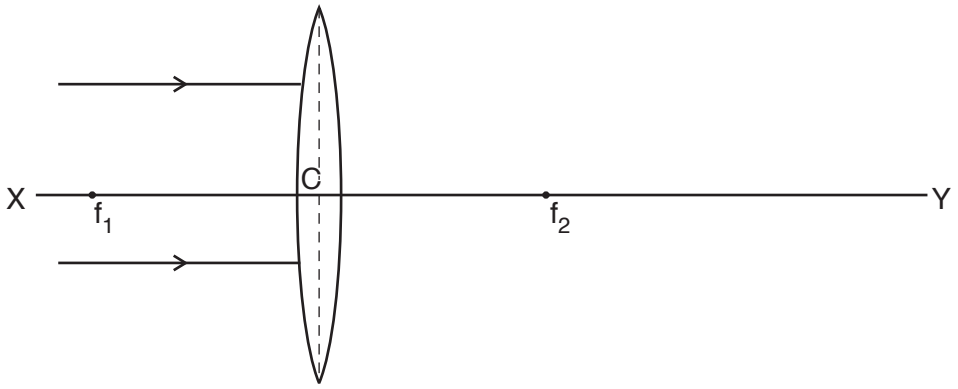

Fig. 8.1

View solution

(a) (i) On Fig. 8.1, complete the ray diagram to show how the lens focuses the light. [3]

View solution

(ii) Which distance on Fig. 8.1 is a focal length of the lens? Tick (✓) one box.

- ☐ C to f_2
- ☐ f_1 to f_2
- ☐ f_2 to Y

[1]

View solution

(b) (i) A ray of light travels through a semicircular glass block, as shown in Fig. 8.2.

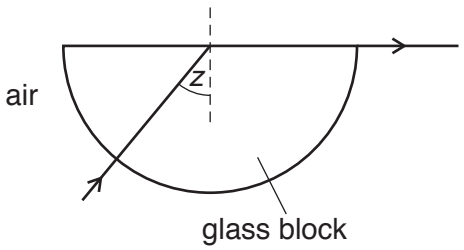

Fig. 8.2

State the term given to the angle of incidence labelled *z*.

..... [1]

View solution

(ii) Fig. 8.3 shows another ray of light travelling in the semicircular glass block.

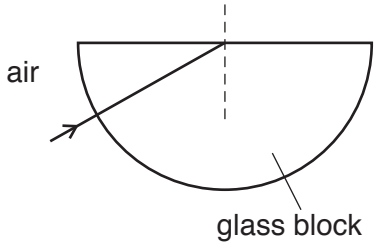

Fig. 8.3

The angle of incidence is greater than *z*. Continue the path of the ray of light until it leaves the block. [2]

[Total: 7]

© UCLES 2017

9 A machine pushes a metal post into the ground using a hammer, as shown in Fig. 9.1. The hammer makes a loud noise when it hits the post.

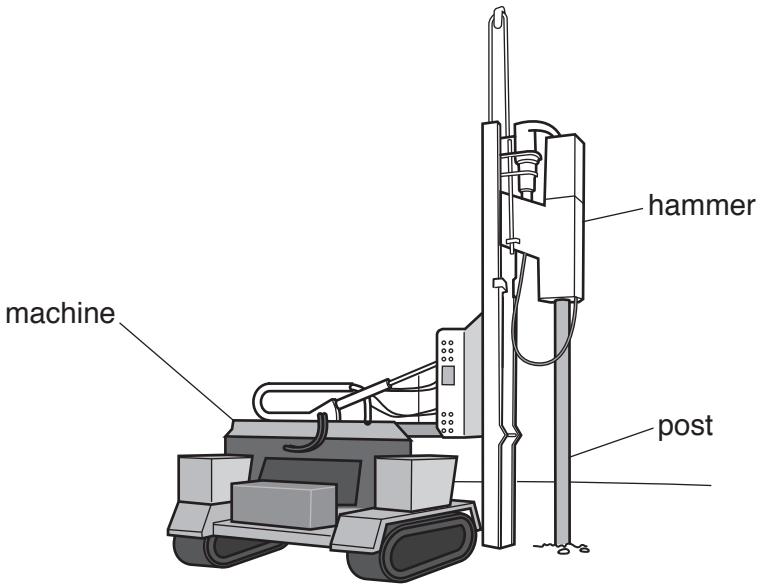

Fig. 9.1

A man stands 160 m from the hammer.

View solution

(a) A man sees the hammer hit the post and a short time later hears the sound of the post being hit. Explain the delay in hearing the sound.

.....

..... [1]

(b) **(i)** The hammer is 320 m from a large building as shown in Fig. 9.2.

View solution

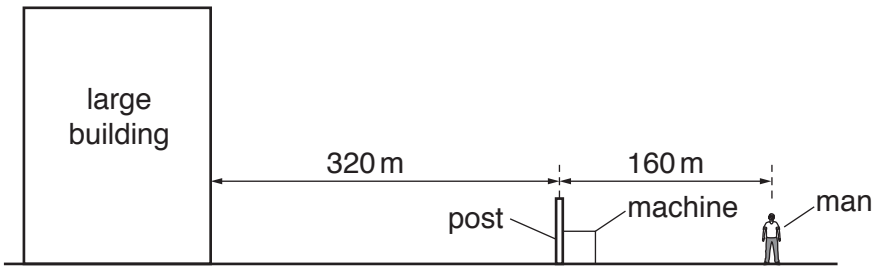

Fig. 9.2

The man hears the hammer hit the post and then hears an echo. Explain why he hears the echo.

.....

..... [1]

(ii) The speed of sound in air is 320 m / s.

Calculate the time difference between the man hearing the first sound and the time at which he hears the echo.

View solution

time difference = ... [3]

(c) Suggest how the sound of the echo is different from the first sound.

..... [1]

[Total: 6]

View solution

© UCLES 2017

10 A student places a bar magnet onto a sheet of paper, as shown in Fig. 10.1.

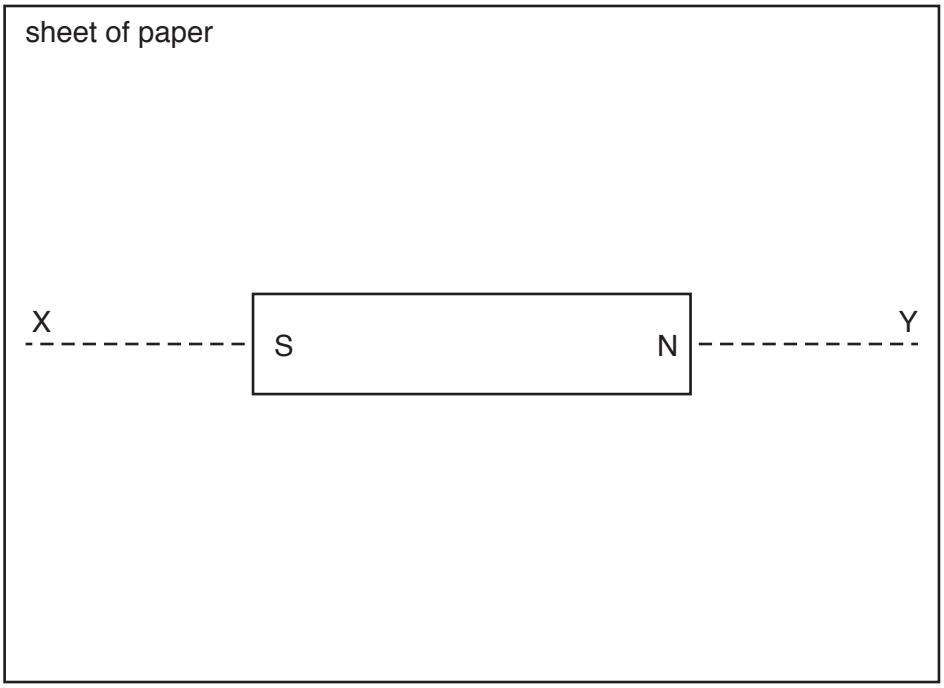

Fig. 10.1

(a) The student shows the pattern of the magnetic field lines around the magnet.

View solution

(i) On Fig. 10.1 carefully draw two magnetic field lines above the centre line XY and two magnetic field lines below XY. [2]

(ii) Indicate the direction of the magnetic field lines. Use an arrow. Mark one field line above XY and one field line below XY. [1]

(iii) State the name of a piece of equipment that can be used to determine the direction of the magnetic field.

..... [1]

(b) Describe how the student can use a bar magnet to test whether a metal rod is a magnet.

View solution

.....

.....

..... [2]

[Total: 6]

11 A student wants to find the resistance of a wire. He connects the circuit shown in Fig. 11.1.

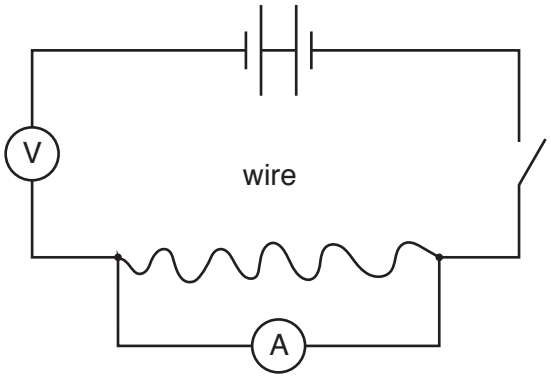

Fig. 11.1

(a) A teacher checks the circuit and identifies three errors.

Using the components given in Fig. 11.1, carefully draw the correct circuit diagram in the space below.

View solution

[3]

(b) The student uses the correct circuit. The student finds that the current is 0.3 A when the potential difference across the wire is 2.7 V.

Calculate the resistance of the wire.

View solution

resistance = ... Ω [3]

© UCLES 2017

(c) The student tests two other pieces of wire made of the same metal. He compares each resistance value with that of the first wire.

View solution

State how the resistance compares with the first wire

(i) for a wire that is longer, but of the same thickness,

..... [1]

(ii) for a wire that is thicker, but of the same length.

..... [1]

[Total: 8]

View solution

12 This question is about radioactive materials.

(a) State the name of the electromagnetic radiation emitted by some nuclei when they decay.

..... [1]

(b) Describe the composition and the penetrating ability of an α-particle.

View solution

composition .....

.....

penetrating ability .....

..... [2]

(c) Americium-241 is a radioactive isotope. It has a half-life of 400 years.

A sample contains americium-241. Calculate the percentage of americium-241 that remains in the sample after 800 years have passed.

View solution

percentage remaining = ... % [2]

[Total: 5]

Permission to reproduce items where third-party owned material protected by copyright is included has been sought and cleared where possible. Every reasonable effort has been made by the publisher (UCLES) to trace copyright holders, but if any items requiring clearance have unwittingly been included, the publisher will be pleased to make amends at the earliest possible opportunity.

To avoid the issue of disclosure of answer-related information to candidates, all copyright acknowledgements are reproduced online in the Cambridge International Examinations Copyright Acknowledgements Booklet. This is produced for each series of examinations and is freely available to download at www.cie.org.uk after the live examination series.

Cambridge International Examinations is part of the Cambridge Assessment Group. Cambridge Assessment is the brand name of University of Cambridge Local Examinations Syndicate (UCLES), which is itself a department of the University of Cambridge.

© UCLES 2017