Cambridge IGCSE

Cambridge International Examinations
Cambridge International General Certificate of Secondary Education

CANDIDATE NAME									
CENTRE NUMBER						CANDIDATE NUMBER			

PHYSICS **0625/41**

Paper 4 Theory (Extended) **October/November 2017**

1 hour 15 minutes

Candidates answer on the Question Paper.

No Additional Materials are required.

READ THESE INSTRUCTIONS FIRST

Write your Centre number, candidate number and name on all the work you hand in.
Write in dark blue or black pen.
You may use an HB pencil for any diagrams or graphs.
Do not use staples, paper clips, glue or correction fluid.
DO **NOT** WRITE IN ANY BARCODES.

Answer **all** questions.
Electronic calculators may be used.
You may lose marks if you do not show your working or if you do not use appropriate units.
Take the weight of 1.0 kg to be 10 N (acceleration of free fall = 10 m/s^2).

At the end of the examination, fasten all your work securely together.
The number of marks is given in brackets [ ] at the end of each question or part question.

The syllabus is approved for use in England, Wales and Northern Ireland as a Cambridge International Level 1/Level 2 Certificate.

This document consists of **14** printed pages and **2** blank pages.

© UCLES 2017

CAMBRIDGE International Examinations

1 Fig. 1.1 shows the speed-time graph for the motion of a car.

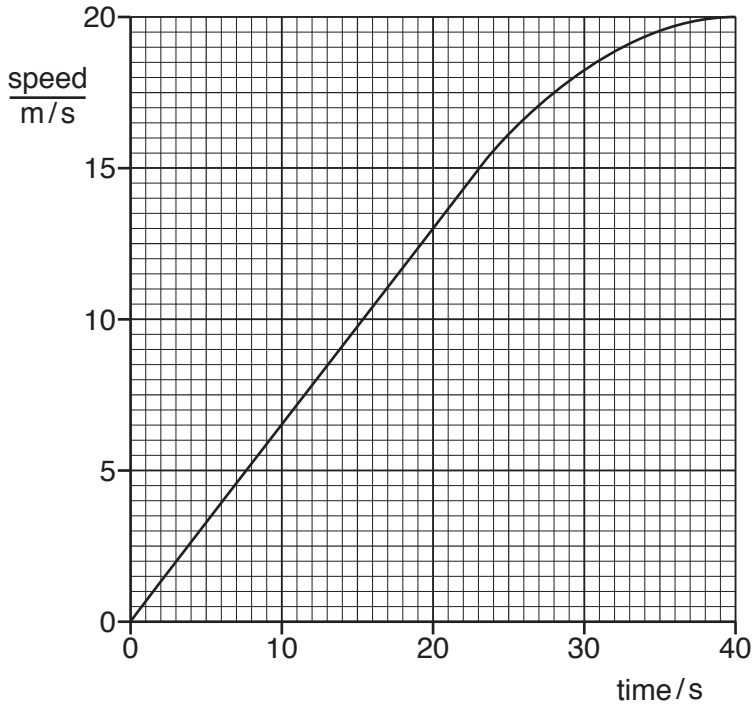

Fig. 1.1

The mass of the car is 1200 kg.

(a) Calculate, for the first 20 s of the motion,

View solution

(i) the distance travelled by the car,

distance = ...[2]

(ii) the acceleration of the car,

View solution

acceleration = ...[2]

(iii) the resultant force acting on the car.

View solution

resultant force = ...[2]

(b) Describe the motion of the car in the period of time from 25 s to 40 s.

View solution

.....

.....[1]

[Total: 7]

© UCLES 2017

2 **(a)** State Hooke's Law.

View solution

.....

.....[1]

(b) For forces up to 120 N, a spring obeys Hooke's Law.

View solution

A force of 120 N causes an extension of 64 mm.

(i) On Fig. 2.1, draw the force-extension graph for the spring for loads up to 120 N. [1]

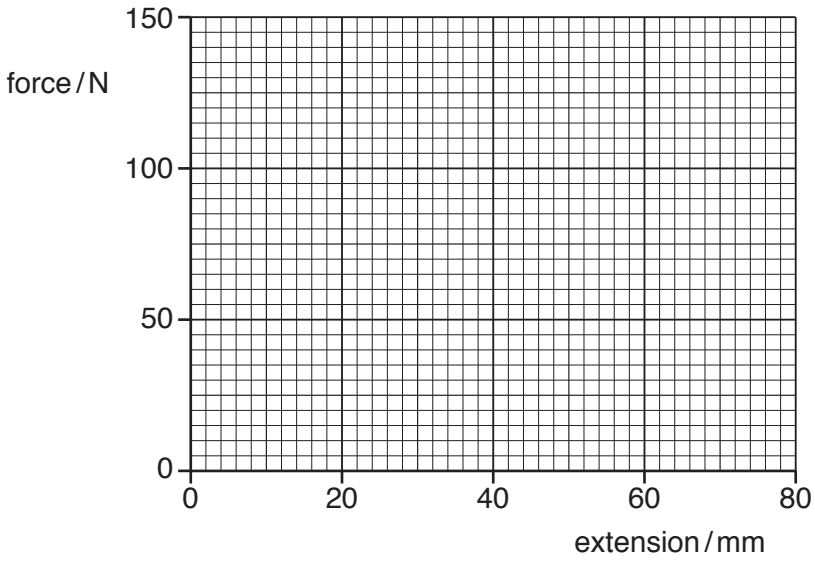

Fig. 2.1

(ii) Calculate the spring constant k of the spring.

View solution

k = ...[2]

(c) A student makes a spring balance using the spring in **(b)**. The maximum reading of this balance is 150 N.

The student tests his balance with a known weight of 140 N. He observes that the reading of the balance is not 140 N.

Suggest and explain why the reading is **not** 140 N.

View solution

.....

.....

.....[2]

[Total: 6]

© UCLES 2017

3 All the sides of a plastic cube are 8.0 cm long. Fig. 3.1 shows the cube.

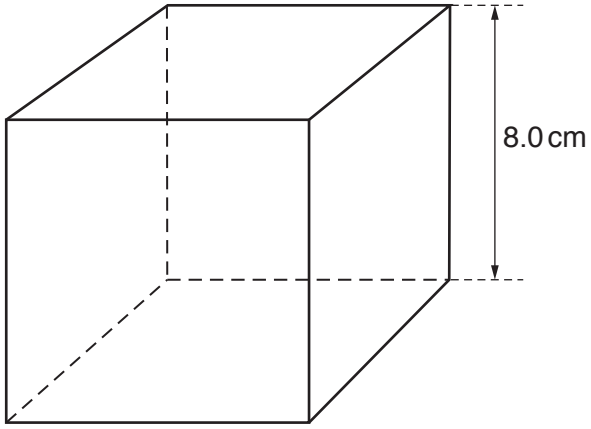

Fig. 3.1 (not to scale)

The mass of the cube is 0.44 kg.

(a) Explain what is meant by *mass*.

View solution

.....[1]

(b) **(i)** Calculate the density of the plastic from which the cube is made.

View solution

density = ...[2]

(ii) The density of one type of oil is 850 kg / m^3.

View solution

State and explain whether the cube floats or sinks when placed in a container of this oil.

.....

.....[1]

(c) On the Moon, the weight of the cube is 0.70 N.

View solution

(i) Calculate the gravitational field strength on the Moon.

gravitational field strength = ...[2]

© UCLES 2017

(ii) In a laboratory on the Moon, the plastic cube is held stationary, using a clamp, in a beaker of the oil of density 850 kg / m^3.

View solution

The arrangement is shown in Fig. 3.2.

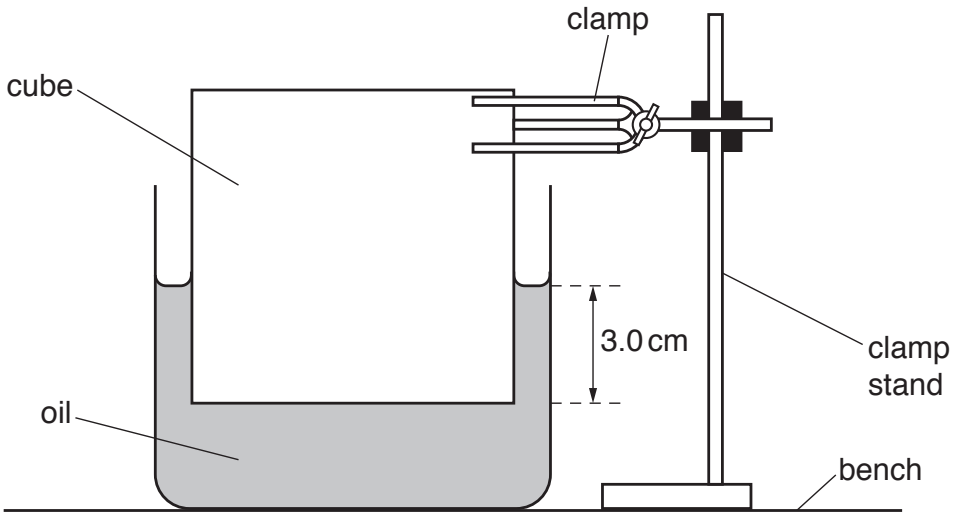

Fig. 3.2

The lower face of the cube is 3.0 cm below the surface of the oil.

Use your answer to **(c)(i)** to calculate the pressure due to the oil on the lower face of the cube.

pressure = ...[2]

[Total: 8]

4 Fig. 4.1 shows a balloon filled with helium that is used to lift measuring instruments to a great height above the Earth's surface.

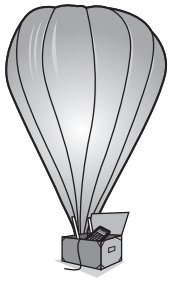

Fig. 4.1

View solution

(a) Explain, in terms of momentum, how the atoms of helium produce a force on the wall of the balloon.

.....

.....

.....

.....[3]

(b) At ground level, the pressure of the helium in the balloon is 1.0×10^5 Pa. The volume occupied by the helium is $9.6\,m^3$.

The balloon is released and it rises quickly through the atmosphere. The volume occupied by the helium increases, but the temperature of the helium may be assumed to stay constant.

(i) Explain, in terms of the helium atoms in the balloon, why the pressure in the balloon is smaller than at ground level.

.....

.....

.....[2]

(ii) Calculate the pressure of the helium when it occupies a volume of $12\,m^3$.

View solution

pressure = ...[2]

[Total: 7]

© UCLES 2017

5 **(a)** A wave passes through a gap in a barrier. The wavelength of the wave is the same magnitude as the width of the gap in the barrier.

View solution

Tick **one** box to indicate what happens to the wave.

diffraction and dispersion	
diffraction only	
dispersion only	
refraction and diffraction	
refraction and dispersion	
refraction only	

[1]

(b) Fig. 5.1 shows six wavefronts of a wave travelling on the surface of deep water. The wave is incident on a boundary with a region where the water is shallow.

View solution

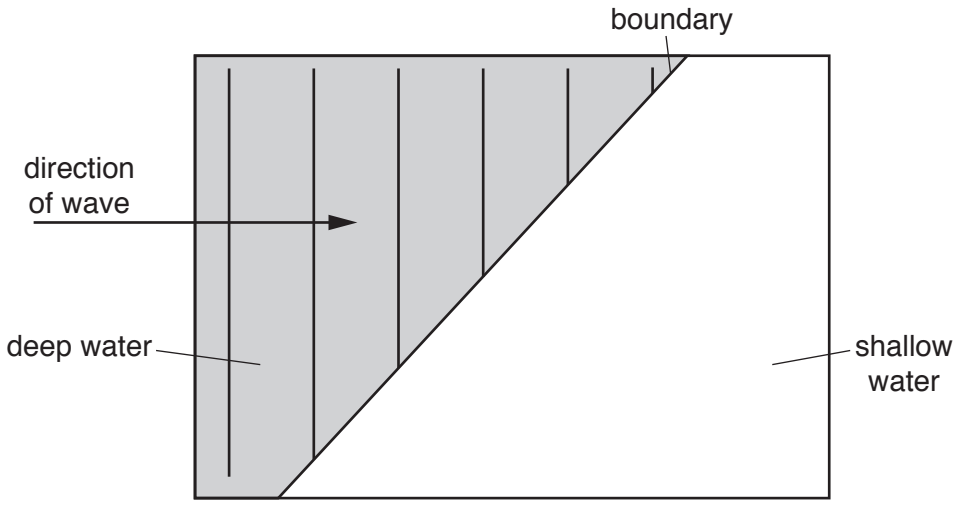

Fig. 5.1

(i) On Fig. 5.1, draw the wavefronts of the wave in the shallow water where the wave travels more slowly. [2]

(ii) The depth of the shallow water is now changed so that the speed of the wave in the shallow water is 0.60 m/s. The speed of the wave in the deep water is 0.80 m/s. The distance between successive wavefronts in the deep water is 1.4 cm.

View solution

Calculate the wavelength of the wave in the shallow water.

wavelength = ...[4]

[Total: 7]

6 **(a)** The left-hand column of the table shows some possible speeds of a sound wave.

In the right-hand column, write down the medium in which a sound wave has this speed.

Choose from solid, liquid or gas.

speed of sound wave / m/s	medium
1500	
5000	
300	

[2]

(b) Fig. 6.1 represents a series of compressions and rarefactions of a sound wave.



Fig. 6.1

(i) On Fig. 6.1, mark, with the letters X and Y, the mid-points of **two** rarefactions. [1]

(ii) State, in terms of pressure, what is meant by a *rarefaction*.

.....

.....[1]

(c) Astronauts set up a mirror on the Moon's surface. A laser beam is transmitted from the Earth's surface to the mirror and is then reflected back to Earth.

On a certain day, the time between transmitting the beam from a point on the Earth's surface and receiving the reflected signal at the same point is 2.56 s.

The speed of the laser beam is 3.00×10^8 m/s.

Calculate the distance between the Earth's surface and the Moon's surface.

distance = ...[3]

[Total: 7]

© UCLES 2017

7 **(a)** Fig. 7.1 shows a converging lens and its principal axis. The points labelled F are each a principal focus of the lens.

View solution

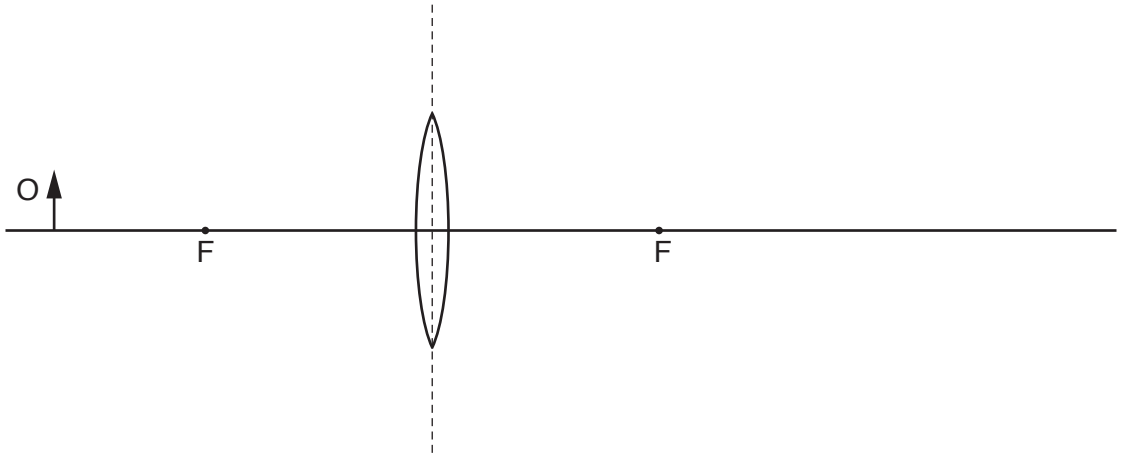

Fig. 7.1

On Fig. 7.1, draw **two** rays from the top of the object O, to locate the image of O.
Label the image I. [3]

(b) Underline **three** of the terms below to describe the nature of the image produced by a converging lens used as a magnifying glass.

diminished **enlarged** **inverted** **real** **same size** **upright** **virtual**

View solution [2]

(c) Fig. 7.2 shows the path of a ray of red light passing through a glass prism.

View solution

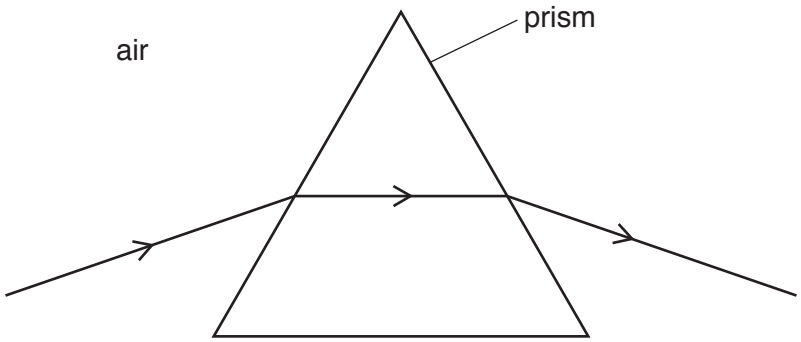

Fig. 7.2

A ray of green light enters the prism along the same path as the ray of red light.

On Fig. 7.2, draw the path of the ray of green light as it passes through the prism and emerges into the air. [2]

[Total: 7]

8 **(a)** Describe a renewable process by which electrical energy is obtained from the energy stored in water. You may draw a diagram in the space.

View solution

.....

.....

.....

.....

.....

.....[4]

(b) Explain why the process described in **(a)** can be regarded as renewable.

View solution

.....

.....

.....

.....[2]

(c) Explain whether the Sun is the source of the energy stored in the water in **(a)**.

View solution

.....

.....

.....

.....[2]

[Total: 8]

9 Fig. 9.1 shows a circuit with three 1.5 V cells.

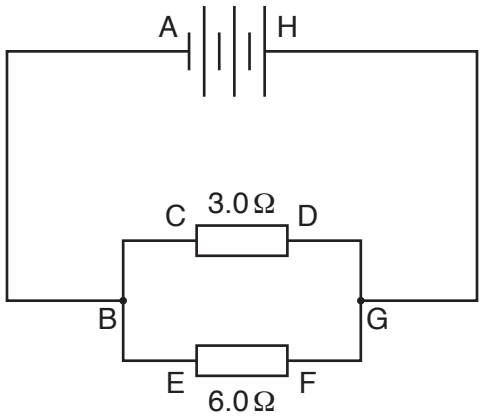

Fig. 9.1

(a) Calculate

(i) the total electromotive force (e.m.f.) of the cells,

e.m.f. = ...[1]

(ii) the total resistance of the circuit,

resistance = ...[3]

(iii) the current in the 3.0 Ω resistor.

current = ...[2]

(b) State, using the letters in Fig. 9.1, how you would connect

(i) an ammeter to measure the total current in the circuit,

.....

.....[1]

(ii) a voltmeter to measure the potential difference (p.d.) across the 6.0 Ω resistor.

.....

.....[1]

[Total: 8]

10 (a) (i) Draw the circuit symbol for a diode.

View solution

[1]

(ii) State the function of a diode.

View solution

.....[1]

(b) Fig. 10.1 shows the proposed system for charging the battery of an electric toothbrush.

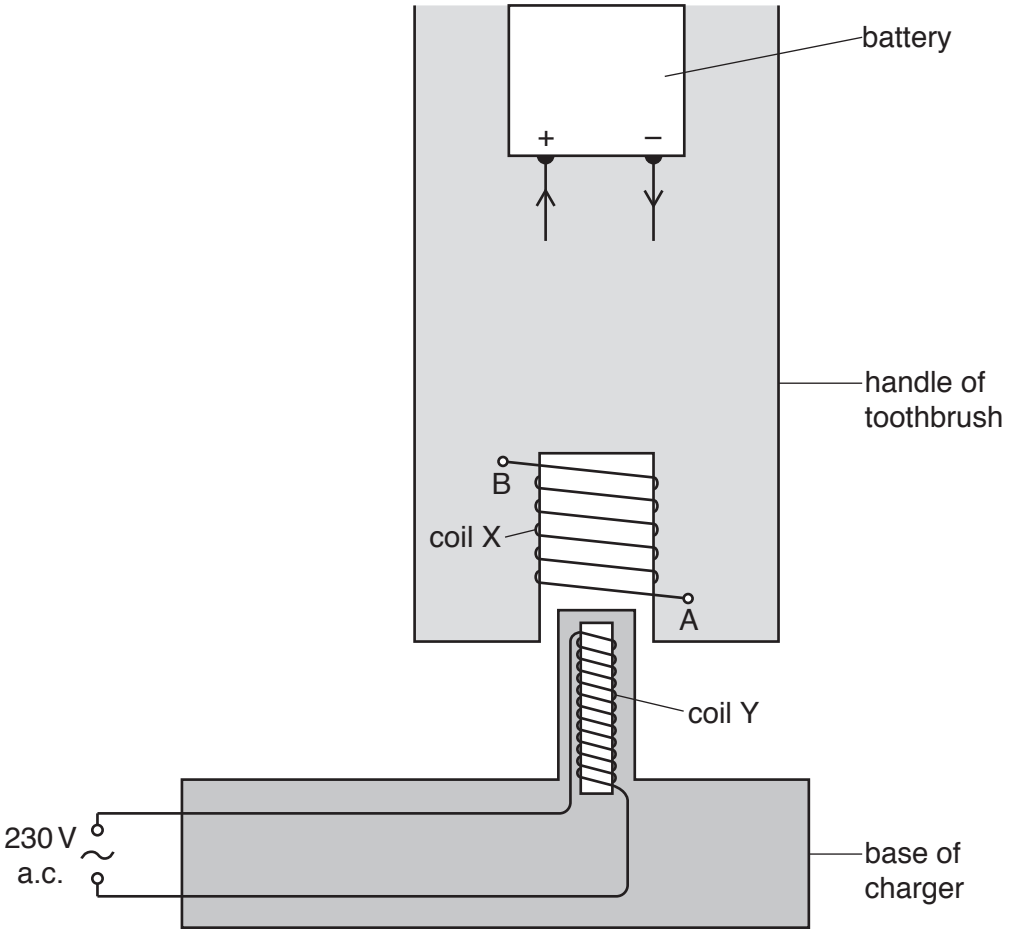

Fig. 10.1

The handle of the brush contains the battery and a coil X. The circuit from coil X to the battery is not shown.

The base of the charger contains a coil Y, wound on an iron core, connected to the a.c. mains supply.

To charge the battery, the handle is lowered so that coil Y is inside coil X.

Fig. 10.1 shows the direction needed for the charging current at the battery.

© UCLES 2017

(i) On Fig. 10.1, complete the circuit from terminals A and B of coil X to the battery. Include a diode. [2]

(ii) Explain how an alternating voltage is produced in coil X.

View solution

.....

.....

.....

.....

.....

.....[3]

[Total: 7]

11 The radioactive isotope carbon-14 ($^{14}_{6}C$) emits β-particles as it decays.

(a) The decay of carbon-14 produces an isotope of nitrogen (N).

View solution

(i) State the nature of a β-particle and state where it is produced.

.....

.....[2]

(ii) Complete the nuclide equation for the radioactive decay of carbon-14.

View solution

$$^{14}_{6}C \rightarrow {}^{\cdots\cdots}_{\cdots\cdots}N + {}^{\cdots\cdots}_{\cdots\cdots}\beta$$

[3]

(b) The half-life of carbon-14 is 5700 years.

View solution

Explain what is meant by the term *half-life*.

.....

.....[1]

(c) A workman operates a machine that uses β-particles to determine the level of liquid in a plastic water bottle that is being filled.

View solution

Suggest why

(i) α-particles are **not** suitable for the same purpose,

.....

.....[1]

(ii) γ-rays are **not** suitable for the same purpose.

View solution

.....

.....[1]

[Total: 8]

© UCLES 2017

BLANK PAGE

© UCLES 2017

BLANK PAGE

Permission to reproduce items where third-party owned material protected by copyright is included has been sought and cleared where possible. Every reasonable effort has been made by the publisher (UCLES) to trace copyright holders, but if any items requiring clearance have unwittingly been included, the publisher will be pleased to make amends at the earliest possible opportunity.

To avoid the issue of disclosure of answer-related information to candidates, all copyright acknowledgements are reproduced online in the Cambridge International Examinations Copyright Acknowledgements Booklet. This is produced for each series of examinations and is freely available to download at www.cie.org.uk after the live examination series.

Cambridge International Examinations is part of the Cambridge Assessment Group. Cambridge Assessment is the brand name of University of Cambridge Local Examinations Syndicate (UCLES), which is itself a department of the University of Cambridge.

© UCLES 2017