Cambridge IGCSE

Cambridge International Examinations
Cambridge International General Certificate of Secondary Education

CANDIDATE NAME									
CENTRE NUMBER						CANDIDATE NUMBER				

PHYSICS **0625/53**

Paper 5 Practical Test **October/November 2017**

1 hour 15 minutes

Candidates answer on the Question Paper.

Additional Materials: As listed in the Confidential Instructions

READ THESE INSTRUCTIONS FIRST

Write your Centre number, candidate number and name in the spaces at the top of the page.
Write in dark blue or black pen.
You may use an HB pencil for any diagrams or graphs.
Do not use staples, paper clips, glue or correction fluid.
DO **NOT** WRITE IN ANY BARCODES.

Answer **all** questions.
You are advised to spend about 20 minutes on each of questions 1 to 3, and about 15 minutes on question 4.
Electronic calculators may be used.
You may lose marks if you do not show your working or if you do not use appropriate units.

At the end of the examination, fasten all your work securely together.
The number of marks is given in brackets [ ] at the end of each question or part question.

For Examiner's Use	
1	
2	
3	
4	
Total	

The syllabus is approved for use in England, Wales and Northern Ireland as a Cambridge International Level 1/Level 2 Certificate.

This document consists of **11** printed pages and **1** blank page.

© UCLES 2017

CAMBRIDGE International Examinations

1 In this experiment, you will investigate how the use of a lid affects the rate of cooling of water in a beaker.

Carry out the following instructions, referring to Fig. 1.1.

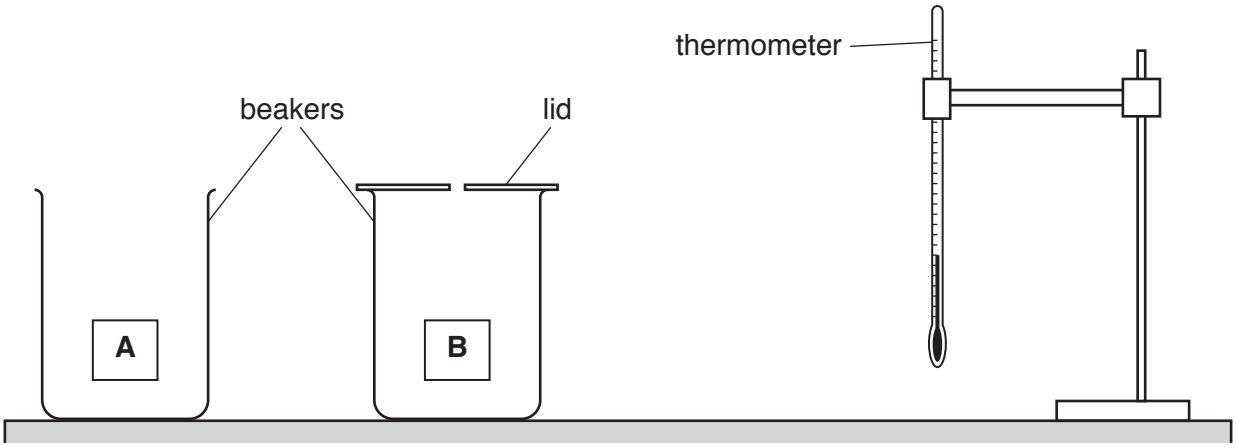

Fig. 1.1

View solution

(a)
- Pour 100 cm^3 of hot water into beaker **A**.
- Place the thermometer in the water in beaker **A**.
- In Table 1.1, record the temperature θ of the water at time $t = 0$ s and immediately start the stopclock.
- Record, in the table, the temperature θ of the water at times $t = 30$ s, 60 s, 90 s, 120 s, 150 s and 180 s.
- Remove the thermometer from the beaker. [1]

(b) (i) Remove the lid from beaker **B**.
Repeat the procedure in **(a)** for beaker **B**, using 75 cm^3 of hot water, and replace the lid immediately after pouring in the water. [1]

(ii) Complete the headings and the time column in Table 1.1. [2]

View solution

Table 1.1

	beaker **A** without a lid	beaker **B** with a lid
t/	θ/	θ/
0		

(c) Describe **two** precautions that you took to ensure that the temperature readings were as accurate as possible in the experiment.

1 .....

.....

2 .....

.....

[2]

(d) **(i)** Write a conclusion, stating how the use of the lid affects the rate of cooling of the water. Justify your answer by reference to your results.

.....

.....

.....

.....[2]

(ii) Suggest **one** change to the apparatus or procedure to make the comparison a fairer test. Explain why the change makes the test fairer.

change .....

.....

explanation .....

.....

.....

[2]

(iii) The temperature of the water in each beaker decreases.

View solution

Describe **one** other similarity in the pattern of cooling in beakers **A** and **B**.

.....

.....

.....[1]

[Total: 11]

2 In this experiment, you will investigate a circuit containing resistors.
The circuit has been set up for you.

Carry out the following instructions, referring to Fig. 2.1.

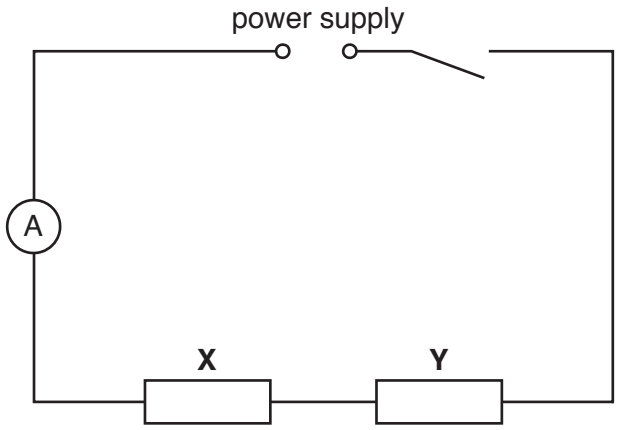

Fig. 2.1

View solution

(a) On Fig. 2.1, draw a voltmeter connected so that it measures the potential difference across resistor **X**. [1]

(b) **(i)** Switch on. Record the value of the current I_S in the circuit.

I_S = ...[1]

(ii) • Use the voltmeter to measure and record the value of the potential difference V_X across resistor **X**.

V_X = ...

Disconnect the voltmeter.

• Reconnect the voltmeter to measure and record the potential difference V_Y across resistor **Y**.

V_Y = ...
[1]

Disconnect the voltmeter.

(iii) Reconnect the voltmeter to measure and record the potential difference V_S across the combination of both resistors.

V_S = ...[1]

Switch off.

View solution

(iv) A student suggests that V_S should be equal to $(V_X + V_Y)$.

State whether your readings support this suggestion. Justify your statement with reference to your results.

statement .....

justification .....

.....

.....

[2]

(c) Calculate the resistance R_S of the combination of resistors, using your readings from **(b)(i)** and **(b)(iii)** and the equation

$$R_S = \frac{V_S}{I_S}.$$

View solution

R_S = ...[2]

(d) The circuit components are to be rearranged so that:

View solution

- resistors **X** and **Y** are in parallel
- the ammeter will measure the total current in the circuit
- the voltmeter will measure the potential difference across both resistors.

In the space below, draw a diagram of this circuit using standard electrical symbols.

[2]

(e) Set up the circuit as described in **(d)**.

Switch on. Measure and record the total current I_P in the circuit and the potential difference V_P across the resistors.

I_P = ...

V_P = ...
[1]

Switch off.

[Total: 11]

View solution

© UCLES 2017

BLANK PAGE

3 In this experiment, you will determine the weight of a metre rule.

Carry out the following instructions, referring to Fig. 3.1.

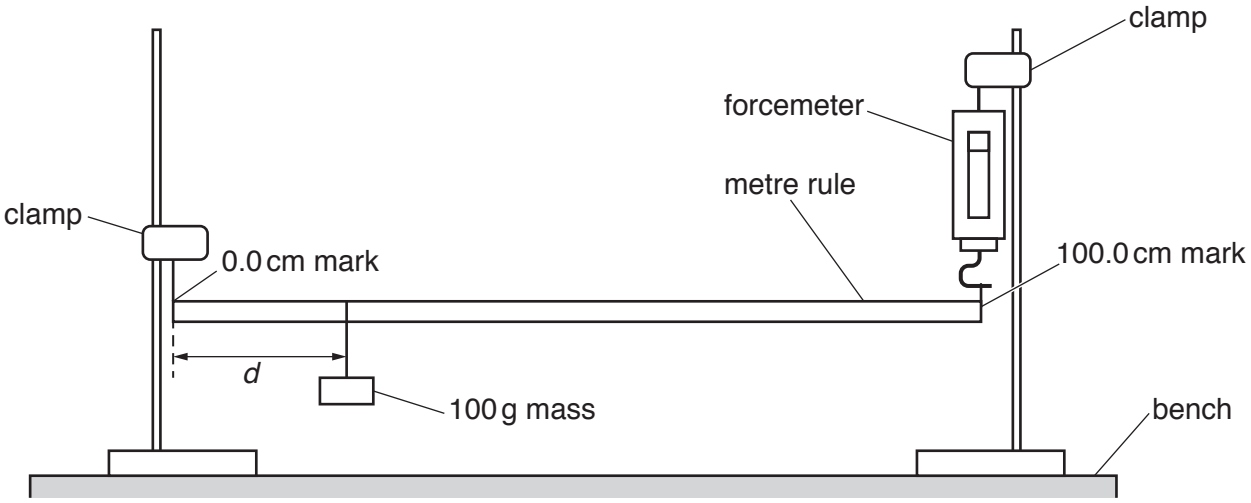

Fig. 3.1

(a) (i)
- Move the 100 g mass to a distance d = 10.0 cm from the 0.0 cm end of the rule.
- Adjust the height of the clamp holding the forcemeter so that the rule is horizontal.
- Read, and record in Table 3.1, the forcemeter reading F.
- Repeat this procedure for values of d = 30.0 cm, 50.0 cm, 70.0 cm and 90.0 cm.

View solution

Table 3.1

d/cm	F/N
10.0	
30.0	
50.0	
70.0	
90.0	

[2]

(ii) Explain how you made sure that the rule was horizontal before each reading.
You may draw a diagram.

View solution

.....

.....

.....[1]

© UCLES 2017

(b) Plot a graph of F/N (y-axis) against d/cm (x-axis).
Start your axes from the origin (0,0).

View solution

Draw a best-fit line.

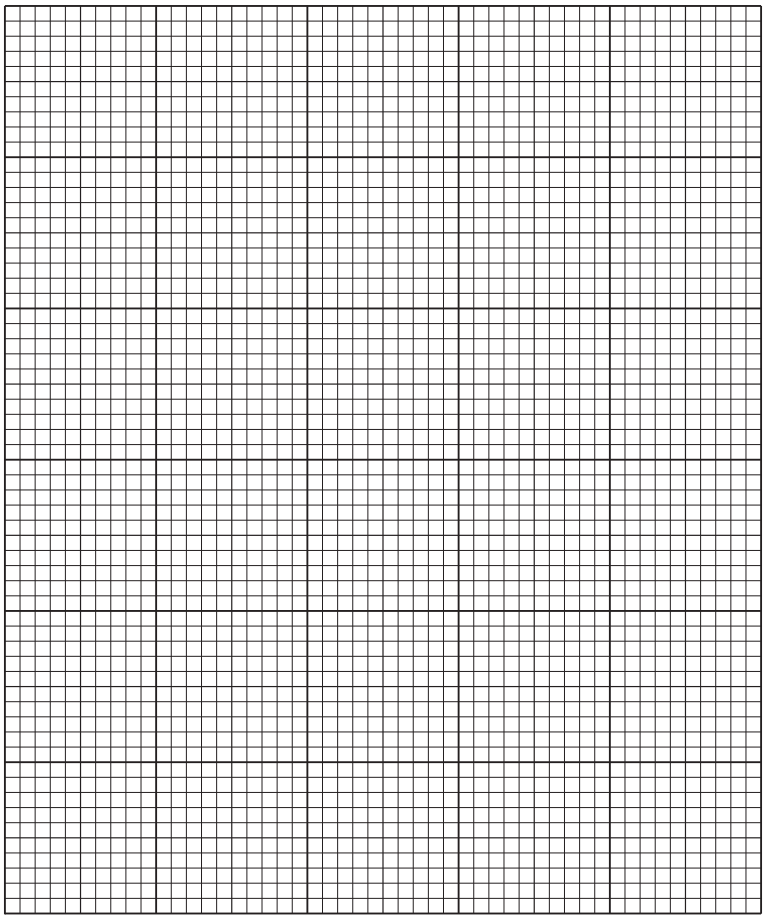

[4]

(c) **(i)** From your graph, determine F_0, the value of F when $d = 0.0$ cm.

View solution

F_0 .....

(ii) Calculate the weight W_R of the metre rule, using the equation $W_R = 2 \times F_0$.
Give W_R to a suitable number of significant figures for this experiment.

View solution

W_R = ...
[2]

(d) A student correctly plots your data points on another sheet of graph paper.

View solution

State and explain whether his best-fit line is likely to be the same as yours. Justify your answer with reference to the plots.

statement .....

explanation .....

.....

.....[1]

(e) Another student, carrying out the same experiment, is not sure if some of his values of *F* are correct.

Suggest **one** improvement to the procedure which would help him to obtain more reliable *F* values.

.....

.....

.....[1]

[Total: 11]

View solution

© UCLES 2017

4 A student has a box of converging lenses, but does not know their focal lengths.

Plan an experiment that will enable her to determine an accurate value for the focal length f of one of the lenses, using the equation

$$f = \frac{uv}{(u + v)}$$

View solution

where u is the distance between an object and the lens and v is the distance between the lens and the focused image of the object.

The apparatus available includes:

a lens holder
a 12 V lamp in a holder, with a power supply
a card with a triangular hole covered with tracing paper.

Write a plan for the experiment.

You should:

- list any additional apparatus needed
- draw a diagram of how the apparatus would be arranged, clearly labelling u and v
- write a method for carrying out the experiment including how f would be determined
- state the precautions which should be taken to obtain a clear, focused image
- state the precautions which should be taken to ensure that measurements are accurate once a focused image has been obtained.

You are **not** required to carry out the experiment.

.....

.....

.....

.....

© UCLES 2017

.....

.....

.....

.....

.....

.....

.....

.....

.....

.....

.....

.....

.....

.....

.....

.....

.....[7]

[Total: 7]

Permission to reproduce items where third-party owned material protected by copyright is included has been sought and cleared where possible. Every reasonable effort has been made by the publisher (UCLES) to trace copyright holders, but if any items requiring clearance have unwittingly been included, the publisher will be pleased to make amends at the earliest possible opportunity.

To avoid the issue of disclosure of answer-related information to candidates, all copyright acknowledgements are reproduced online in the Cambridge International Examinations Copyright Acknowledgements Booklet. This is produced for each series of examinations and is freely available to download at www.cie.org.uk after the live examination series.

Cambridge International Examinations is part of the Cambridge Assessment Group. Cambridge Assessment is the brand name of University of Cambridge Local Examinations Syndicate (UCLES), which is itself a department of the University of Cambridge.