Cambridge IGCSE

Cambridge International Examinations
Cambridge International General Certificate of Secondary Education

CANDIDATE NAME									
CENTRE NUMBER						CANDIDATE NUMBER			

PHYSICS **0625/61**

Paper 6 Alternative to Practical **October/November 2017**

1 hour

Candidates answer on the Question Paper.

No Additional Materials are required.

READ THESE INSTRUCTIONS FIRST

Write your Centre number, candidate number and name on all the work you hand in.
Write in dark blue or black pen.
You may use an HB pencil for any diagrams or graphs.
Do not use staples, paper clips, glue or correction fluid.
DO **NOT** WRITE IN ANY BARCODES.

Answer **all** questions.
Electronic calculators may be used.
You may lose marks if you do not show your working or if you do not use appropriate units.

At the end of the examination, fasten all your work securely together.
The number of marks is given in brackets [ ] at the end of each question or part question.

The syllabus is approved for use in England, Wales and Northern Ireland as a Cambridge International Level 1/Level 2 Certificate.

This document consists of **12** printed pages.

© UCLES 2017

1 A student is investigating resistance using the circuit shown in Fig. 1.1.

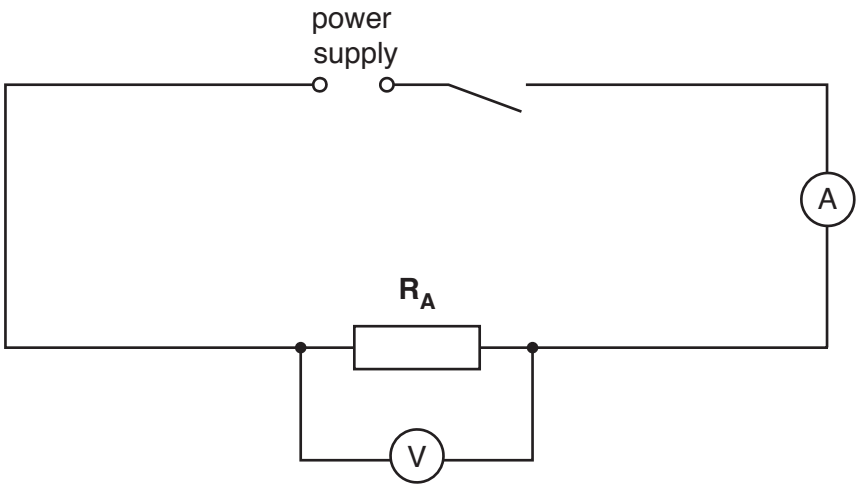

Fig. 1.1

(a) The student measures the potential difference V_1 across the resistor $\mathbf{R_A}$ and the current I_1 in the circuit. Figs. 1.2 and 1.3 show the voltmeter and ammeter scales.

View solution

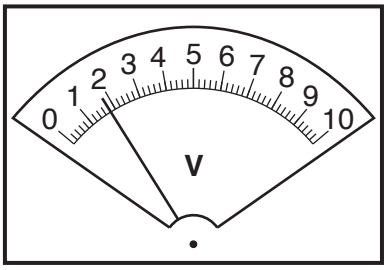

Fig. 1.2

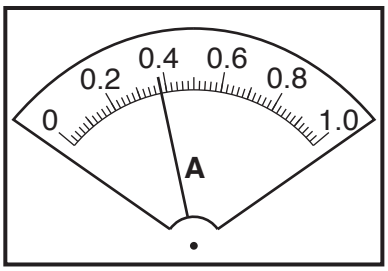

Fig. 1.3

(i) Write down the readings shown on the scales in Figs. 1.2 and 1.3.

V_1 = ...

I_1 = ...

[2]

(ii) Calculate the resistance R_1 of the resistor $\mathbf{R_A}$ using the equation $R_1 = \frac{V_1}{I_1}$.

View solution

R_1 = ... [1]

© UCLES 2017

(b) The student connects a resistor $\mathbf{R_B}$ in series with $\mathbf{R_A}$.

She measures the potential difference V_2 across the two resistors $\mathbf{R_A}$ and $\mathbf{R_B}$ combined and the current I_2 in the circuit.

V_2 = 1.8 V

I_2 = 0.19 A

Calculate the resistance R_2 of resistors $\mathbf{R_A}$ and $\mathbf{R_B}$ combined in series, using the equation $R_2 = \frac{V_2}{I_2}$.

View solution

R_2 = ...[1]

(c) The student connects a third resistor $\mathbf{R_C}$ in series with $\mathbf{R_A}$ and $\mathbf{R_B}$.

She measures the potential difference V_3 across the three resistors and the current I_3 in the circuit.

V_3 = 1.7 V

I_3 = 0.13 A

(i) Calculate the resistance R_3 of resistors $\mathbf{R_A}$, $\mathbf{R_B}$ and $\mathbf{R_C}$ combined in series, using the equation $R_3 = \frac{V_3}{I_3}$.

View solution

R_3 = ...

© UCLES 2017

(ii) On Fig. 1.4, draw a line for the needle on the ammeter to show the reading of 0.13 A.

View solution

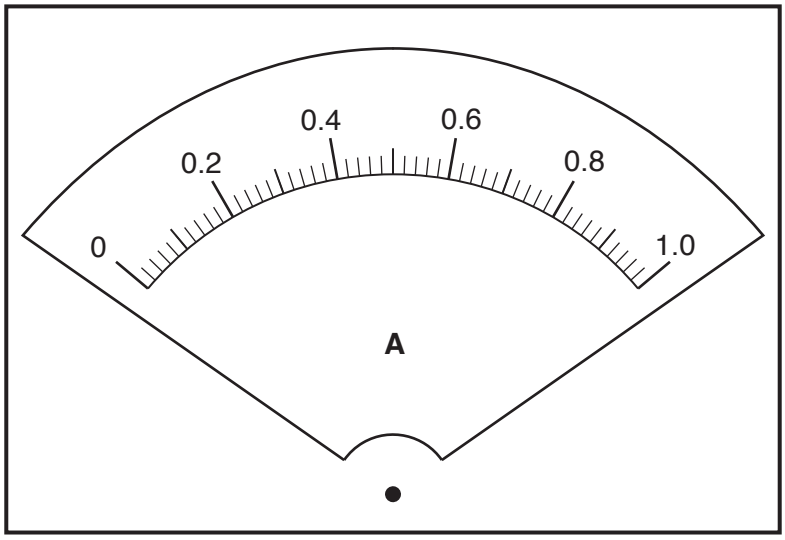

[1]

Fig. 1.4

(d) A student suggests that $R_3 = 3 \times R_1$.

State whether the results agree with this suggestion. Justify your answer by reference to the results.

View solution

statement .....

justification .....

.....

.....

[1]

(e) Another student suggests that the three resistors $\mathbf{R_A}$, $\mathbf{R_B}$ and $\mathbf{R_C}$ each have the same value of resistance.

Explain how you could use the circuit shown in Fig. 1.1 to check this suggestion.

View solution

.....

.....[1]

© UCLES 2017

(f) Complete the circuit diagram in Fig. 1.5 to show:

View solution

- the three resistors connected in parallel
- the voltmeter connected to measure the potential difference across the resistors
- a variable resistor connected to control the current in all three resistors.

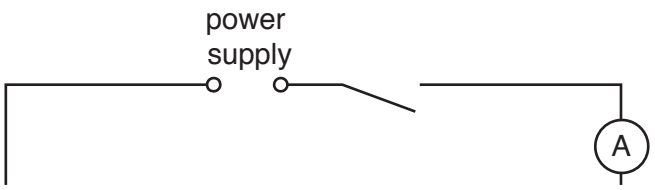

Fig. 1.5

[2]

(g) The circuit in Fig. 1.5 could be used to determine the combined resistance of three resistors connected in parallel.

View solution

Suggest a reason for connecting a variable resistor in the circuit.

.....

.....[1]

[Total: 10]

2 A student is determining the focal length *f* of a lens.
Fig. 2.1 shows the apparatus used.

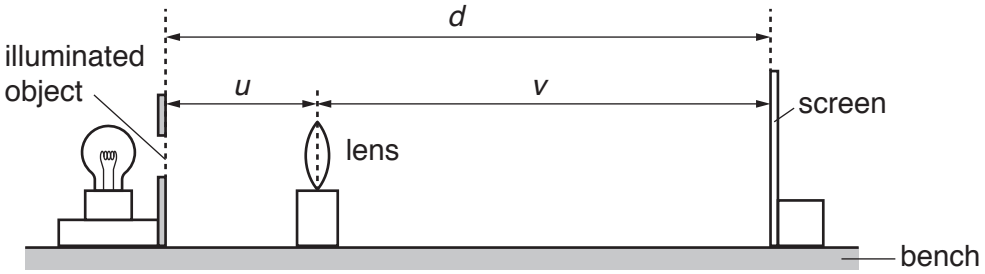

Fig. 2.1

(a) The student obtains a sharply-focused image on the screen.

(i) On Fig. 2.1, measure the distance *v* from the lens to the screen.

v = ...

(ii) On Fig. 2.1, measure the distance *d* from the illuminated object to the screen.

d = ...
[2]

(b) Fig. 2.1 is drawn 1/10th actual size.

(i) Calculate *V*, the actual distance from the lens to the screen. Record the value of *V* in the first row of Table 2.1.

(ii) Calculate *D*, the actual distance from the illuminated object to the screen. Record the value of *D* in the first row of the table.

(iii) Calculate *UV* and record the result in the table.

[2]

(c) The student repeated the procedure with the lens at a distance *U* = 30.0 cm from the illuminated object. All the readings are recorded in the table.

Table 2.1

U/cm	*V*/cm	*UV*/cm^2	*D*/cm
20.0			
30.0	29.5	885	59.5

State **one** difference that you would expect to observe between the image formed on the screen when *U* = 20.0 cm and when *U* = 30.0 cm.

.....

.....[1]

© UCLES 2017

(d) **(i)** Use the results in the first row of the table to calculate a value f_1 for the focal length of the lens. Use the equation $f_1 = \frac{UV}{D}$.

View solution

f_1 = ...

(ii) Use the results in the second row of the table to calculate a value f_2 for the focal length of the lens. Use the equation $f_2 = \frac{UV}{D}$.

View solution

f_2 = ...

(iii) Calculate the average value f_A for the focal length of the lens. Give your answer to a suitable number of significant figures for this experiment.

View solution

f_A = ...

[3]

(e) Suggest **two** reasons why it may be difficult to obtain reliable results in this experiment.

View solution

1. .....

.....

2. .....

.....

[2]

(f) A student states that a more reliable value for the focal length is obtained if more values of *U*, *V* and *D* are collected, enabling a graph to be drawn of *UV* against *D*.

(i) Suggest a suitable number of values for *U*.

View solution

.....

(ii) Suggest a suitable range of values for *U*.

View solution

.....

[2]

[Total: 12]

© UCLES 2017

3 A student is investigating whether the diameter of a pendulum bob affects the period of a pendulum. The period is the time taken for one complete oscillation of the pendulum. Fig. 3.1 shows a pendulum.

View solution

Fig. 3.2 shows one complete oscillation.

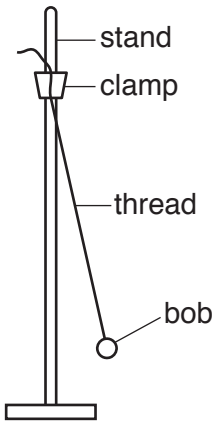

Fig. 3.1

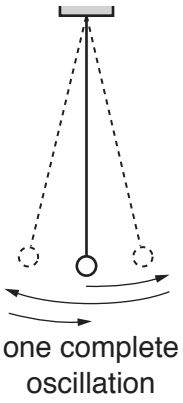

Fig. 3.2

The student has the following apparatus:

pendulum bobs made of polystyrene with diameters 1 cm, 2 cm, 3 cm, 4 cm and 5 cm
a supply of thread and a pair of scissors
clamp and stand.

Plan an experiment to investigate whether the diameter of a pendulum bob affects the period of a pendulum.

You should:

- list additional apparatus that you would require
- explain briefly how you would carry out the investigation
- state the key variables that you would control
- draw a table with column headings, to show how you would display your readings (You are **not** required to enter any readings in the table.)
- explain briefly how you would use your readings to reach a conclusion.

© UCLES 2017

.....

.....

.....

.....

.....

.....

.....

.....

.....

.....

.....

.....

.....

.....

.....[7]

[Total: 7]

4 A student is determining the weight of a load using a balancing method.

Fig. 4.1 shows the apparatus used.

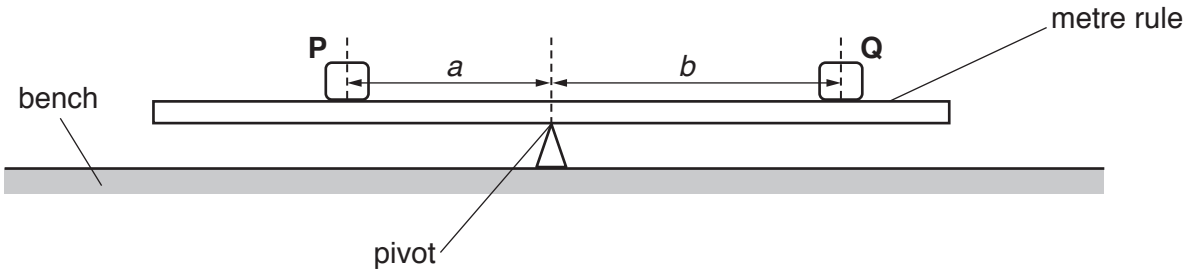

Fig. 4.1

The student places the metre rule on the pivot and adjusts its position so that the metre rule is as near as possible to being balanced.

He places a load **P** on the metre rule so that its centre is exactly at the 30.0 cm mark.

He records the distance *a* between **P** and the pivot.

a = 19.8 cm

He places a load **Q** of weight *Q* = 1.0 N on the metre rule and adjusts the position of **Q** so that the metre rule is as near as possible to being balanced.

He measures the distance *b* between the centre of load **Q** and the pivot.

He repeats the procedure, with the load **P** remaining at the 30.0 cm mark, using *Q* values of 2.0 N, 3.0 N, 4.0 N and 5.0 N. All the readings are recorded in Table 4.1.

Table 4.1

Q/N	*b*/cm	$\frac{1}{Q}/\frac{1}{\text{N}}$
1.0	40.0	
2.0	19.5	
3.0	13.5	
4.0	10.5	
5.0	7.5	

(a) For each value of *Q*, calculate $\frac{1}{Q}$ and record the result in the table. [1]

View solution

© UCLES 2017

(b) Plot a graph of b/cm (y-axis) against $\frac{1}{Q}/\frac{1}{N}$ (x-axis).

View solution

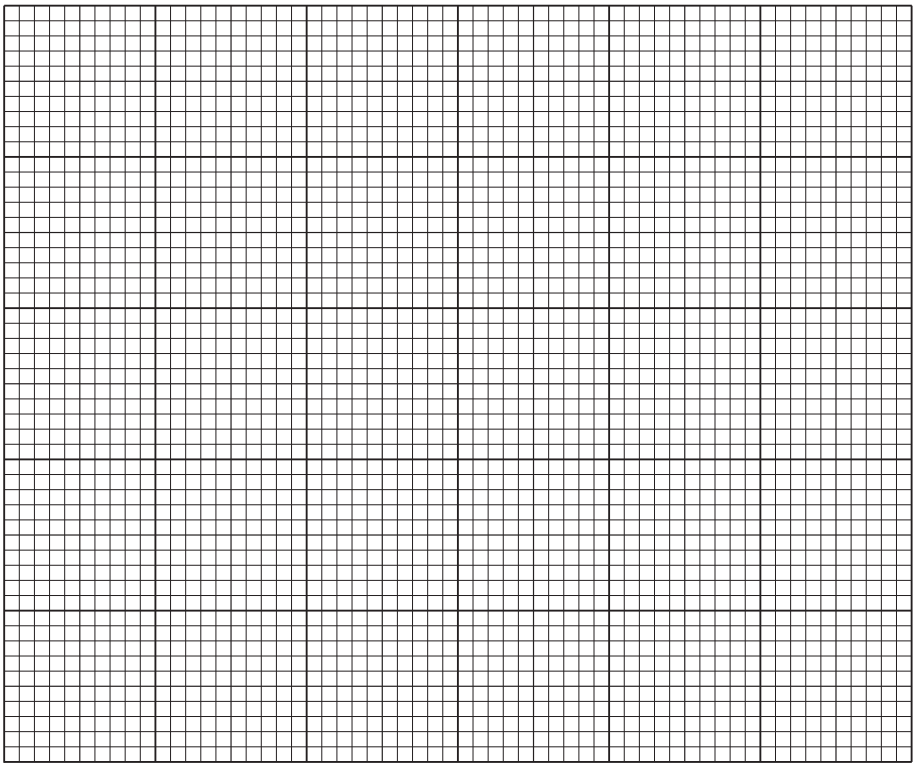

[4]

(c) **(i)** Determine the gradient G of the graph. Show clearly on the graph how you obtained the necessary information.

View solution

G = ...[2]

(ii) Calculate the weight P of load **P** using the equation $P = \frac{G}{a}$, where a = 19.8 cm.

View solution

P = ...[1]

© UCLES 2017

(d) The student measures the weight *P* of load **P** using a forcemeter. Fig. 4.2 shows the forcemeter.

View solution

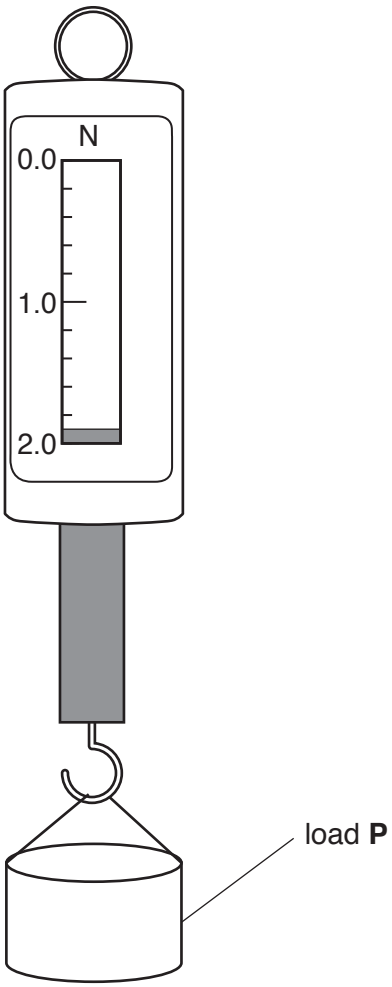

Fig. 4.2

Write down the reading *P* shown on the forcemeter.

P = ... N [1]

(e) The student has carried out the experiment with care and is expecting the two values of *P* in **(c)** and **(d)** to be the same.

View solution

Suggest **two** reasons why the values of *P* may be different.

1. .....

.....

2. .....

.....

[2]

[Total: 11]

Permission to reproduce items where third-party owned material protected by copyright is included has been sought and cleared where possible. Every reasonable effort has been made by the publisher (UCLES) to trace copyright holders, but if any items requiring clearance have unwittingly been included, the publisher will be pleased to make amends at the earliest possible opportunity.

To avoid the issue of disclosure of answer-related information to candidates, all copyright acknowledgements are reproduced online in the Cambridge International Examinations Copyright Acknowledgements Booklet. This is produced for each series of examinations and is freely available to download at www.cie.org.uk after the live examination series.

Cambridge International Examinations is part of the Cambridge Assessment Group. Cambridge Assessment is the brand name of University of Cambridge Local Examinations Syndicate (UCLES), which is itself a department of the University of Cambridge.

© UCLES 2017