Cambridge IGCSE

Cambridge International Examinations
Cambridge International General Certificate of Secondary Education

CANDIDATE NAME									
CENTRE NUMBER						CANDIDATE NUMBER				

PHYSICS **0625/33**

Paper 3 Theory (Core) **October/November 2018**

1 hour 15 minutes

Candidates answer on the Question Paper.

No Additional Materials are required.

READ THESE INSTRUCTIONS FIRST

Write your Centre number, candidate number and name on all the work you hand in.
Write in dark blue or black pen.
You may use an HB pencil for any diagrams or graphs.
Do not use staples, paper clips, glue or correction fluid.
DO **NOT** WRITE IN ANY BARCODES.

Answer **all** questions.
Electronic calculators may be used.
You may lose marks if you do not show your working or if you do not use appropriate units.
Take the weight of 1.0 kg to be 10 N (acceleration of free fall = 10 m/s^2).

At the end of the examination, fasten all your work securely together.
The number of marks is given in brackets [ ] at the end of each question or part question.

This syllabus is approved for use in England, Wales and Northern Ireland as a Cambridge International Level 1/Level 2 Certificate.

This document consists of **16** printed pages.

© UCLES 2018

1 Fig. 1.1 shows a large tank containing water. The tank leaks. Drops of water fall from the tank. The drops hit the ground at a regular rate.

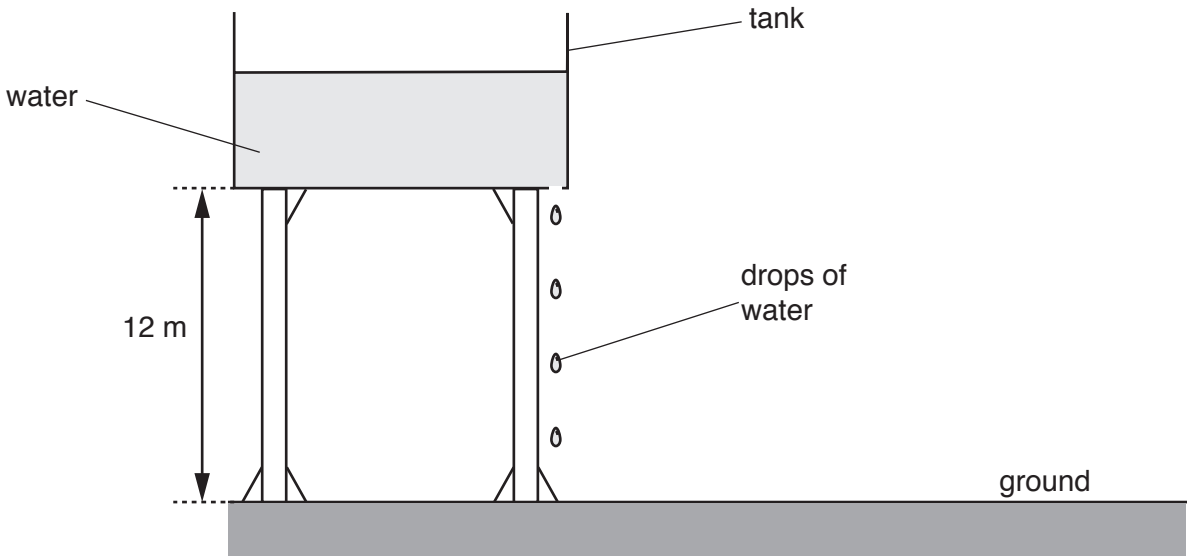

Fig. 1.1

(a) A student measures the time interval between two drops of water hitting the ground. She uses a stopwatch and repeats the procedure three times. Fig. 1.2 shows each stopwatch reading.

View solution



time = ... s time = ... s time = ... s

Fig. 1.2

(i) On the line below each stopwatch, state the time readings shown, in seconds. [1]

(ii) Calculate the average time interval between two drops of water hitting the ground.

View solution

average time = ... s [2]

© UCLES 2018

(b) Another student measures the average time taken for a drop of water to fall from the tank to the ground. The time taken is 1.6 s.

View solution

Calculate the average speed of this drop of water.

average speed = ... m/s [3]

(c) Fig. 1.3 shows the speed-time graph for a different drop of water.

View solution

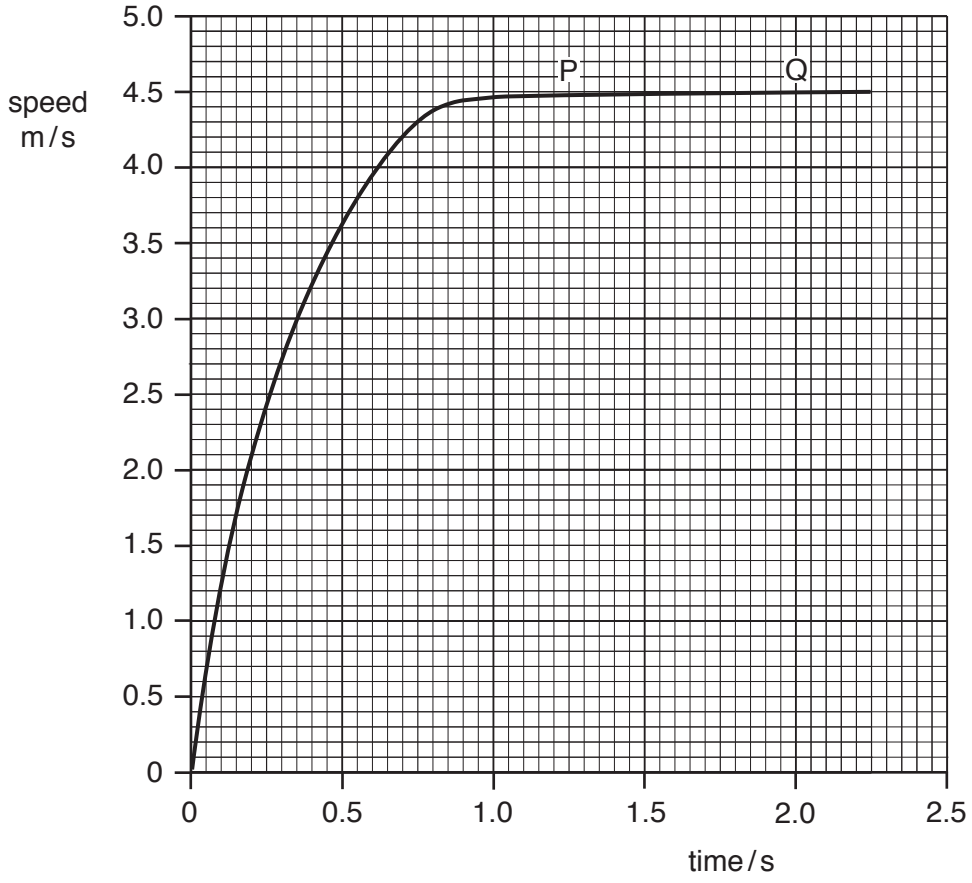

Fig. 1.3

Use Fig. 1.3 to determine the distance fallen by the drop between P and Q.

distance = ... m [3]

[Total: 9]

2 **(a)** A student has a piece of metal that has an irregular shape. The weight of the metal is 3.0 N.

Calculate the mass of the metal.

View solution

mass = ... kg [2]

(b) Fig. 2.1 shows the piece of metal, a measuring cylinder and a beaker containing water.

View solution

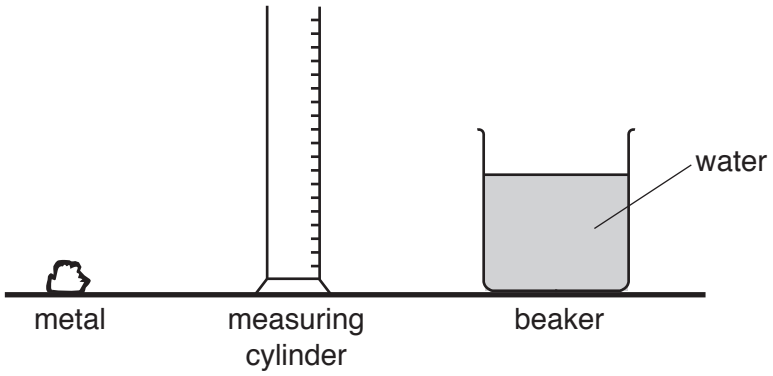

Fig. 2.1

(i) Describe how to determine the volume of the metal, using the equipment in Fig. 2.1.

.....

.....

.....

.....

.....

.....[4]

(ii) Explain why the procedure in **(b)(i)** is not suitable for finding the volume of a piece of low-density wood that is of similar shape and size to the piece of metal in **(a)**.

.....

.....[1]

(iii) The mass of another piece of metal is 405 g and its volume is 150 cm^3.
Calculate the density of the metal. State the unit.

density = ... [3]

[Total: 10]

© UCLES 2018

3 Fig. 3.1 shows devices that generate electricity.

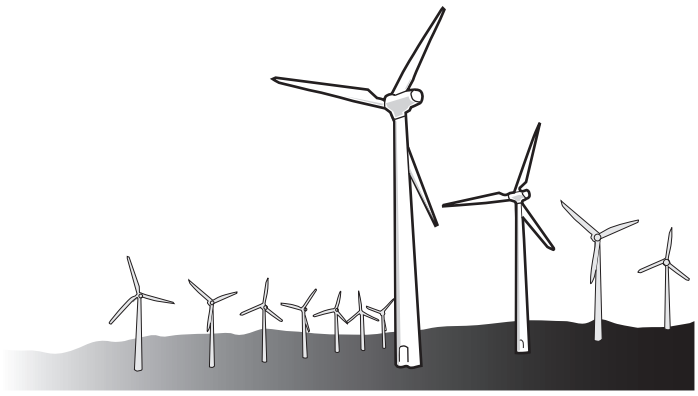

Fig. 3.1

(a) Describe how the devices shown in Fig. 3.1 generate electrical energy.

View solution

.....

.....

.....

.....[3]

(b) Describe the advantages and disadvantages of generating electrical energy by using a coal-fired power station compared with the devices shown in Fig. 3.1.

.....

.....

.....

.....

.....

.....

.....

.....[4]

[Total: 7]

View solution

4 **(a)** In Fig. 4.1, each box represents a state of matter. Each arrow shows a change of state. Some labels are missing.

View solution

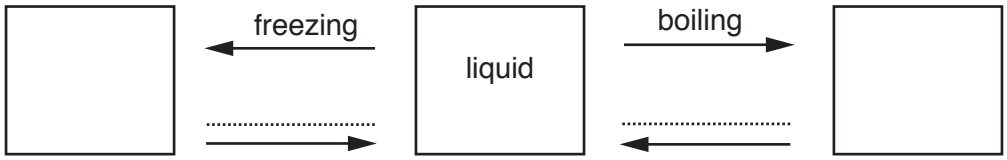

Fig. 4.1

(i) On Fig. 4.1, write the name of the state of matter in each of the empty boxes. [1]

(ii) On Fig. 4.1, on each unlabelled arrow, write the change of state that it represents. [1]

(b) These statements are about particles in a liquid. Two statements are correct.

View solution

Tick the boxes next to the **two** correct statements.

- ☐ The particles are in a regular pattern.
- ☐ The particles are as far apart as those in a gas.
- ☐ The particles are a similar distance apart to those in a solid.
- ☐ The particles vibrate about fixed positions.
- ☐ The particles move randomly. [2]

[Total: 4]

© UCLES 2018

5 **(a)** Fig. 5.1 shows a transverse wave. Four distances A, B, C and D are marked on the wave.

View solution

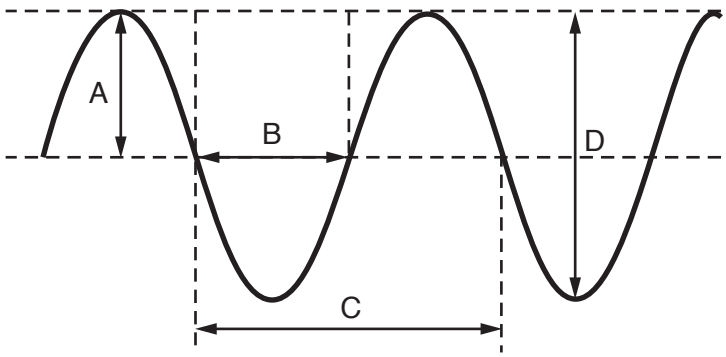

Fig. 5.1

State the letter that shows the amplitude of the wave.

.....[1]

(b) State the meaning of the term *frequency* of a wave.

View solution

.....

.....[2]

(c) A long spring is fixed at one end, as shown in Fig. 5.2. The spring is moved towards and away from the fixed end, repeatedly. The compressions and rarefactions on the spring at a particular time can be seen.

View solution

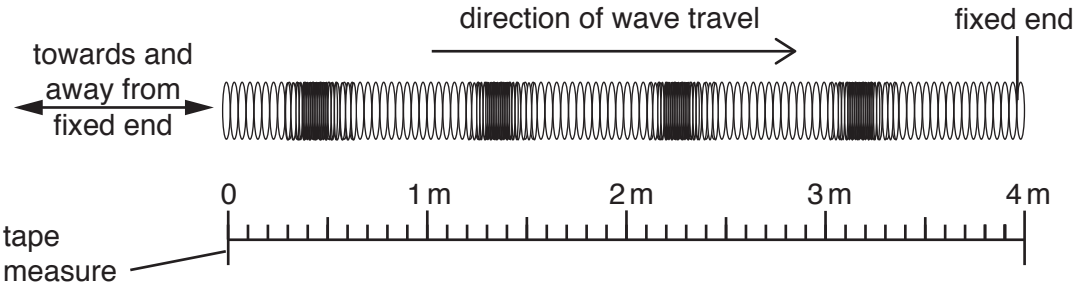

Fig. 5.2

(i) State the type of wave in the spring.

.....[1]

(ii) State one other example of this type of wave.

View solution

.....[1]

(iii) Use the scale in Fig. 5.2 to determine the wavelength of the wave in the spring.

View solution

wavelength = ... cm [1]

[Total: 6]

© UCLES 2018

6 **(a)** Fig. 6.1 shows a ray of green light hitting a glass prism.

View solution

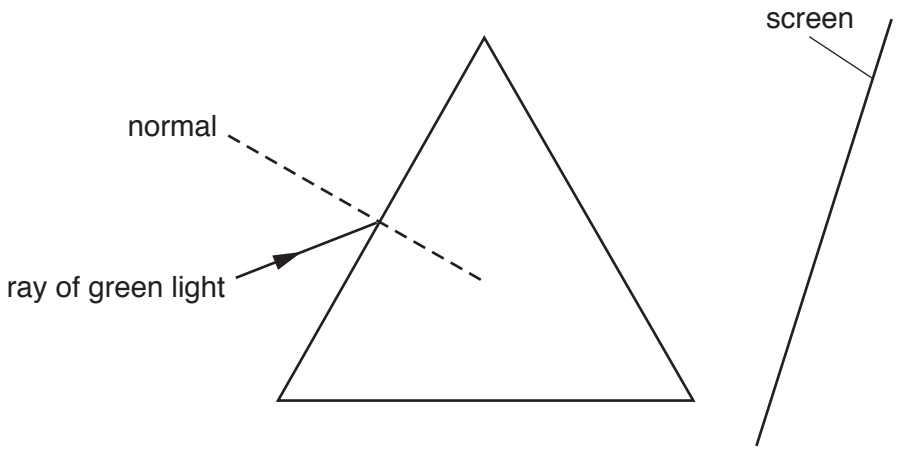

Fig. 6.1

(i) On Fig. 6.1, label the angle of incidence for the ray, using the letter, *i*. [1]

(ii) On Fig. 6.1, complete the path of the ray of green light until it hits the screen. [2]

(b) The ray of green light is replaced with a ray of white light.

View solution

(i) The white light splits into a spectrum of colours. State the term used to describe this effect.

.....[1]

(ii) State the colour that is refracted most by the prism.

.....[1]

[Total: 5]

View solution

7 Some students make statements about sound.

In each part of the question, only **one** statement is correct.
Place a tick in the box next to each correct statement.

(a) ☐ Sound travels at the same speed as light.

View solution

☐ Sound travels faster than the speed of light.

☐ Sound travels slower than the speed of light. [1]

(b) ☐ Healthy human ears can hear sounds in the range 2.0 Hz to 2000 Hz.

View solution

☐ Healthy human ears can hear sounds in the range 20 Hz to 20 000 Hz.

☐ Healthy human ears can hear sounds in the range 200 Hz to 200 000 Hz. [1]

(c) ☐ Increasing the amplitude of a sound wave increases its speed.

View solution

☐ Increasing the amplitude of a sound wave increases its frequency.

☐ Increasing the amplitude of a sound wave increases its loudness. [1]

(d) ☐ An echo is produced when sound is diffracted.

View solution

☐ An echo is produced when sound is refracted.

☐ An echo is produced when sound is reflected. [1]

[Total: 4]

© UCLES 2018

8 Fig. 8.1 shows a sheet of paper. A bar magnet is underneath the paper. A student sprinkles iron filings onto the paper.

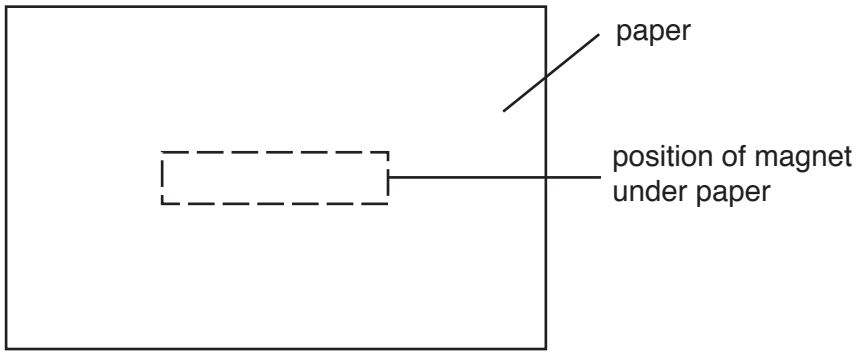

Fig. 8.1

View solution

(a) On Fig. 8.1

- Label the position of each pole of the magnet. Use the label N for the north pole and S for the south pole.
- Draw one magnetic field line above the magnet and draw one magnetic field line below the magnet.
- Add **one** arrow to show the direction of the magnetic field.

[4]

(b) A student places a soft iron rod inside a coil of insulated wire. The coil is connected to a battery, as shown in Fig. 8.2.

View solution

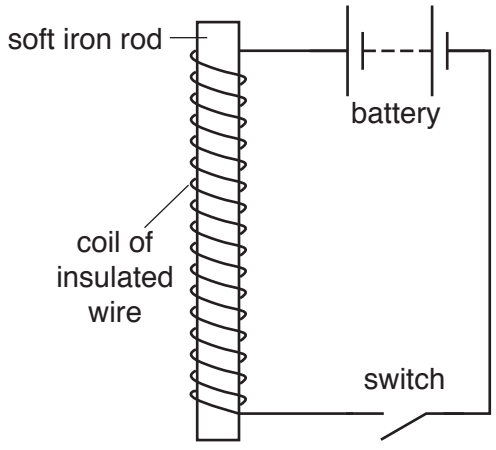

Fig. 8.2

(i) State the name given to the device shown in Fig. 8.2.

.....[1]

(ii) The student puts one end of the device in Fig. 8.2 just above a pile of iron filings.

View solution

He closes the switch for a short time and then opens it again.

Describe the effect this has on the iron filings.

.....

.....[1]

(iii) The student removes the soft iron rod and replaces it with a steel rod.

He puts one end of the steel rod just above the pile of iron filings. He closes the switch for a short time and then opens it again.

View solution

Describe the effect this has on the iron fillings.

.....

.....

.....[1]

[Total: 7]

9 Fig. 9.1 shows a circuit with two lamps and three ammeters connected in series to a power supply.

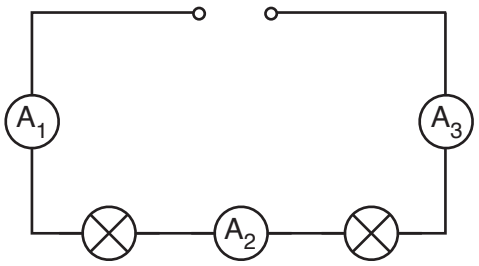

Fig. 9.1

(a) The current shown on ammeter A_1 is 0.6 A.

View solution

Complete the table with the values for the current that would be shown on the other two ammeters.

ammeter	current / A
A_2	
A_3	

[1]

(b) The resistance of each lamp is 20 Ω.

View solution

Determine the combined resistance of the lamps.

resistance = ... Ω [1]

(c) The circuit is changed. The two lamps are connected in parallel.

View solution

(i) Compare the current from the power supply with the current in each lamp.

.....

.....[1]

(ii) Compare the resistance of one lamp in this circuit with the combined resistance of the two lamps connected in parallel.

.....

.....[1]

(d) A different series circuit contains a 140 Ω fixed resistor. An ammeter in the circuit shows a current of 0.30 A.

View solution

Calculate the potential difference (p.d.) across the resistor. State the unit.

potential difference = ... [4]

[Total: 8]

© UCLES 2018

10 (a) State the name of the component represented by the symbol  .

View solution

Describe its purpose.

name .....

purpose .....

[2]

(b) Fig. 10.1 shows an electrical cooker hood used in some kitchens.

View solution

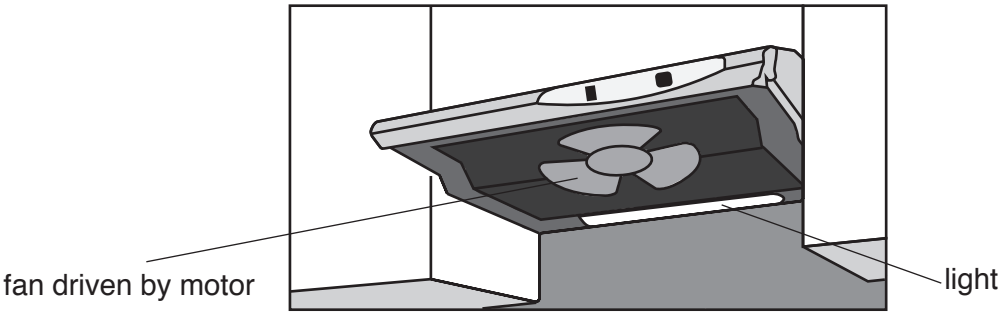

Fig. 10.1

The cooker hood removes steam from the kitchen. It has a fan driven by a motor. It also has a lamp.

Fig. 10.2 shows a simplified circuit diagram for the cooker hood.

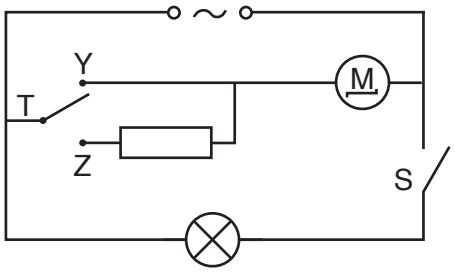

Fig. 10.2

(i) State the type of electrical supply used by the cooker hood.

.....[1]

(ii) Switch S is closed. Switch T is moved to position Y. State the name of any components that are switched on.

.....[1]

(iii) Switch T is moved from position Y to position Z. Suggest how this change affects the motor.

.....[1]

(c) Electrical appliances with metal cases can become dangerous if there is a fault. Suggest a hazard and describe a safety feature to reduce the danger.

hazard .....

.....

safety feature .....

.....

[2]

[Total: 7]

View solution

11 **(a)** Fig. 11.1 shows a simple electric motor.

View solution

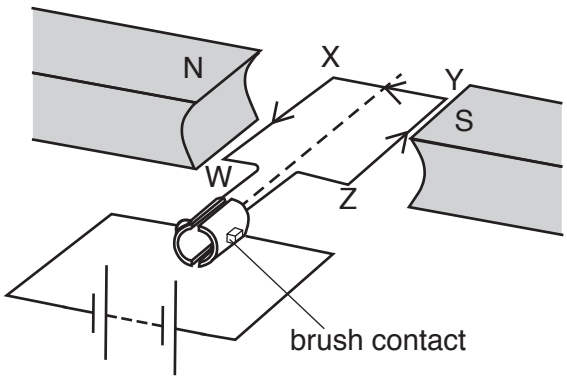

Fig. 11.1

(i) There is a current in the coil WXYZ. The direction of this current is shown by the arrows.

On Fig. 11.1, draw an arrow to show the direction of the force acting on side WX and an arrow to show the direction of the force acting on side YZ.

[1]

(ii) State three ways of increasing the turning effect of the motor.

View solution

1. .....

2. .....

3. .....

[3]

(b) In a home, a step-down transformer reduces the mains voltage of 225 V to 4.5 V.

View solution

The transformer has 4000 turns on the primary coil.

Calculate the number of turns on the secondary coil.

number of turns = ... [3]

[Total: 7]

12 A nuclear power station uses uranium to generate thermal energy.

(a) The fuel for the power station is an isotope of uranium.

View solution

Explain the meaning of the term *isotope*.

.....

.....

.....[2]

(b) When the nucleus of a uranium atom decays, it releases a β-particle.

View solution

Describe the relative ionising effect, and the relative penetrating ability, of a β-particle.

relative ionising effect .....

.....

relative penetrating ability .....

.....

[2]

(c) A sample of rock includes some uranium-239.

View solution

The half-life of uranium-239 is 23 minutes.

Determine the fraction of the uranium-239 that remains after 46 minutes.

fraction remaining = ...[2]

[Total: 6]

Permission to reproduce items where third-party owned material protected by copyright is included has been sought and cleared where possible. Every reasonable effort has been made by the publisher (UCLES) to trace copyright holders, but if any items requiring clearance have unwittingly been included, the publisher will be pleased to make amends at the earliest possible opportunity.

To avoid the issue of disclosure of answer-related information to candidates, all copyright acknowledgements are reproduced online in the Cambridge International Examinations Copyright Acknowledgements Booklet. This is produced for each series of examinations and is freely available to download at www.cie.org.uk after the live examination series.

Cambridge International Examinations is part of the Cambridge Assessment Group. Cambridge Assessment is the brand name of University of Cambridge Local Examinations Syndicate (UCLES), which is itself a department of the University of Cambridge.

© UCLES 2018