Cambridge IGCSE

Cambridge International Examinations
Cambridge International General Certificate of Secondary Education

CANDIDATE NAME									
CENTRE NUMBER						CANDIDATE NUMBER				

PHYSICS **0625/42**

Paper 4 Theory (Extended) **October/November 2018**

1 hour 15 minutes

Candidates answer on the Question Paper.

No Additional Materials are required.

READ THESE INSTRUCTIONS FIRST

Write your Centre number, candidate number and name on all the work you hand in.
Write in dark blue or black pen.
You may use an HB pencil for any diagrams or graphs.
Do not use staples, paper clips, glue or correction fluid.
DO **NOT** WRITE IN ANY BARCODES.

Answer **all** questions.
Electronic calculators may be used.
You may lose marks if you do not show your working or if you do not use appropriate units.
Take the weight of 1.0 kg to be 10 N (acceleration of free fall = 10 m/s^2).

At the end of the examination, fasten all your work securely together.
The number of marks is given in brackets [ ] at the end of each question or part question.

This syllabus is approved for use in England, Wales and Northern Ireland as a Cambridge International Level 1/Level 2 Certificate.

This document consists of **18** printed pages and **2** blank pages.

© UCLES 2018

CAMBRIDGE International Examinations

—

1 A lorry is travelling along a straight, horizontal road.

Fig. 1.1 is the distance-time graph for the lorry.

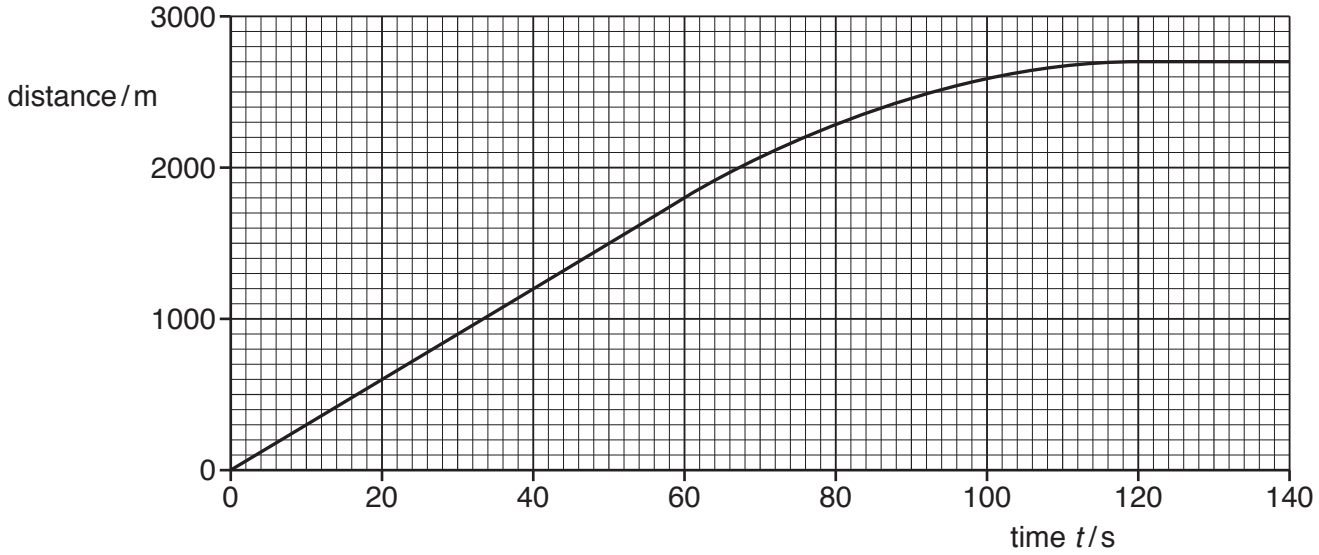

Fig. 1.1

(a) Using Fig. 1.1, determine:

View solution

(i) the speed of the lorry at time $t = 30\,s$

speed = ...[2]

(ii) the average speed of the lorry between time $t = 60\,s$ and time $t = 120\,s$.

View solution

average speed = ...[2]

(b) At time $t = 30\,s$, the total resistive force acting on the lorry is $1.4 \times 10^4\,N$.

(i) Using Fig. 1.1, determine the magnitude of the acceleration of the lorry at time $t = 30\,s$.

View solution

acceleration = ...[1]

(ii) Determine the forward force on the lorry due to its engine at time $t = 30\,s$.

View solution

forward force = ...[1]

(c) Describe the motion of the lorry between time $t = 60\,s$ and time $t = 130\,s$.

View solution

.....

.....

.....[2]

[Total: 8]

2 **(a)** Fig 2.1 shows liquid in a cylinder.

View solution

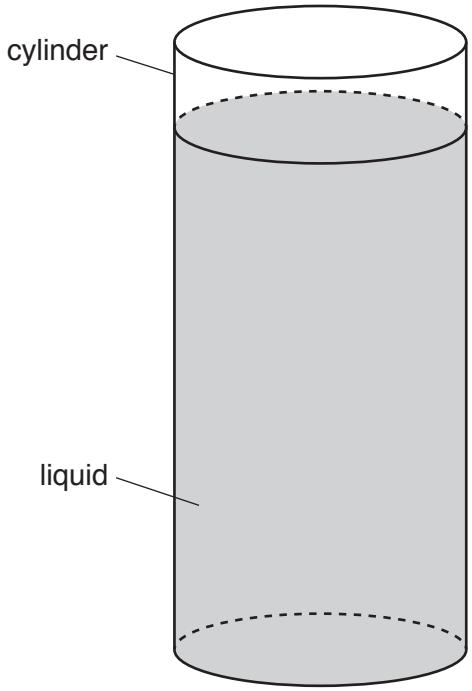

Fig. 2.1

Table 2.1 gives some data about the cylinder and the liquid.

Table 2.1

radius of cylinder	3.5 cm
weight of empty cylinder	2.5 N
depth of liquid	12.0 cm
density of liquid	900 kg / m^3

The cylinder containing liquid is placed on a digital balance that displays the mass in kg.

Calculate the reading shown on the balance.

reading ..... kg [4]

© UCLES 2018

(b) Fig. 2.2 shows a device that measures the pressure of a gas.

View solution

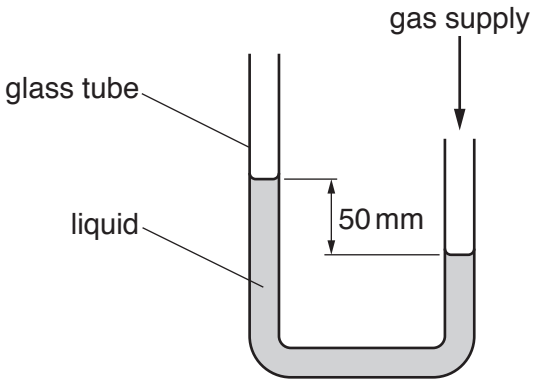

Fig. 2.2

(i) State the name of the device. .....[1]

(ii) The pressure of the gas is 400 Pa greater than atmospheric pressure.

View solution

Calculate the density of the liquid.

density = ...[2]

(iii) With the gas supply connected, the top of the tube on the left of the device is sealed securely with a rubber stopper. The gas pressure is then increased.

View solution

State and explain what happens to the liquid in the device.

.....

.....

.....

.....[2]

[Total: 9]

3 **(a)** The velocity of an object of mass m increases from u to v.

State, in terms of m, u and v, the change of momentum of the object.

View solution

.....[1]

(b) In a game of tennis, a player hits a stationary ball with his racquet.

(i) The racquet is in contact with the ball for 6.0 ms. The average force on the ball during this time is 400 N.

Calculate the impulse on the tennis ball.

View solution

impulse = ...[2]

(ii) The mass of the ball is 0.056 kg.

Calculate the speed with which the ball leaves the racquet.

View solution

speed = ...[2]

(iii) State the energy transfer that takes place:

View solution

1. as the ball changes shape during the contact between the racquet and the ball

.....

.....

2. as the ball leaves the racquet.

.....

.....

[2]

[Total: 7]

© UCLES 2018

BLANK PAGE

4 Fig. 4.1 shows apparatus used by a student to measure the specific heat capacity of iron.

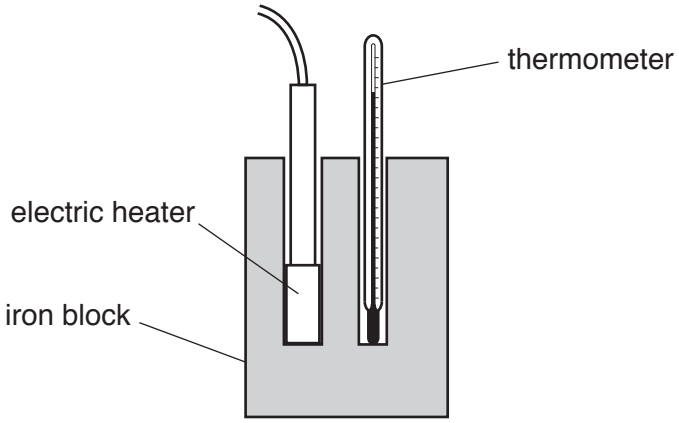

Fig. 4.1

(a) The student improves the accuracy of the experiment by placing material around the block, as shown in Fig. 4.2.

View solution

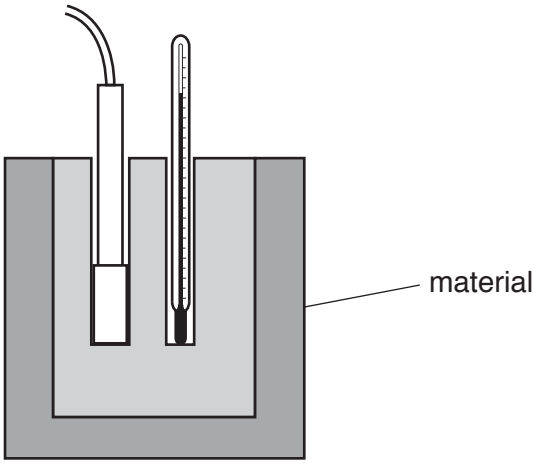

Fig. 4.2

(i) Suggest the name of a possible material the student could use and explain how it improves the accuracy of the experiment.

suggestion .....

explanation .....

.....

.....

[3]

(ii) State how the student could further improve the accuracy of the experiment by using more of the material used in Fig. 4.2.

.....

.....

.....[1]

(b) The current in the heater is 3.8 A and the potential difference (p.d.) across it is 12 V. The iron block has a mass of 2.0 kg. When the heater is switched on for 10 minutes, the temperature of the block rises from 25 °C to 55 °C.

View solution

Calculate the specific heat capacity of iron.

specific heat capacity = ...[4]

[Total: 8]

5 **(a)** Fig. 5.1 shows a visible spectrum focused on a screen by passing light from a source of white light through a lens and a prism.

View solution

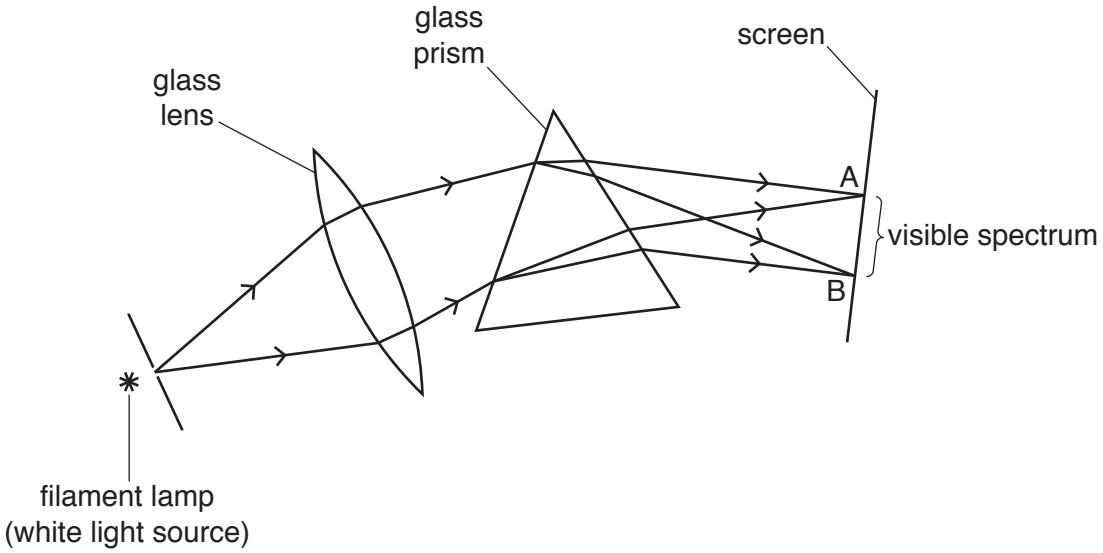

Fig. 5.1

(i) State the name of the process that separates the colours in white light.

.....[1]

View solution

(ii) State the colour of the light on the screen at:

point A .....

point B .....

[1]

(iii) State the property of the glass of the prism that causes white light to be split into the different colours of the spectrum.

.....[1]

View solution

(b) Fig. 5.2 shows a section of an optical fibre in air. A ray of light is incident on the fibre wall at X.

View solution

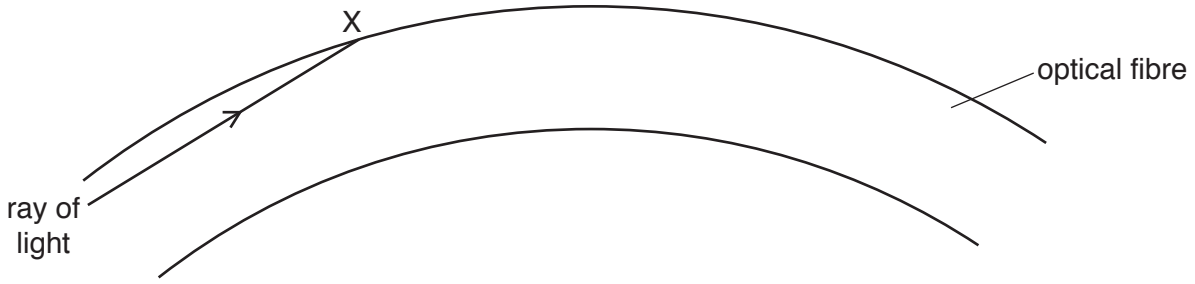

Fig. 5.2

(i) On Fig. 5.2, continue the path of the ray of light up to the end of the fibre. [1]

(ii) The refractive index of the material of the fibre is 1.46. Calculate the critical angle of the material of the fibre.

View solution

critical angle = ...[2]

(iii) State **two** uses of optical fibres.

View solution

1 .....

2 .....

[2]

[Total: 8]

6 Fig. 6.1 represents a sound wave of wavelength 0.45 m travelling from left to right.

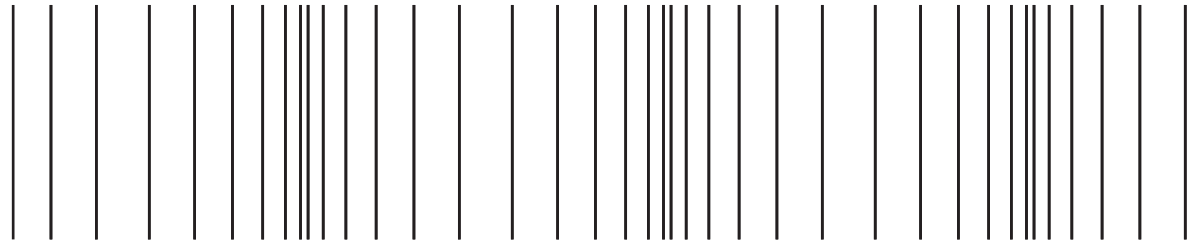

Fig. 6.1 (not to scale)

View solution

(a) On Fig. 6.1:

(i) at the centre of a compression, mark a cross and label it C [1]

(ii) at the centre of a rarefaction, mark a cross and label it R [1]

(iii) draw a double-headed arrow to represent a distance of 0.90 m. [1]

View solution

(b) The frequency of the wave is 750 Hz.

Calculate the speed of the wave.

speed = ...[2]

View solution

(c) Suggest a medium through which the sound wave is travelling and state your reasoning.

medium .....

reason .....

.....

[1]

View solution

(d) Another type of wave that consists of compressions and rarefactions is ultrasound.

(i) State **one** other similarity between sound of frequency 750 Hz and ultrasound.

.....

.....[1]

View solution

(ii) State **one** way in which sound of frequency 750 Hz is different from ultrasound.

.....

.....[1]

[Total: 8]

© UCLES 2018

BLANK PAGE

7 Fig. 7.1 shows three identical lamps and an ammeter connected to a power supply.

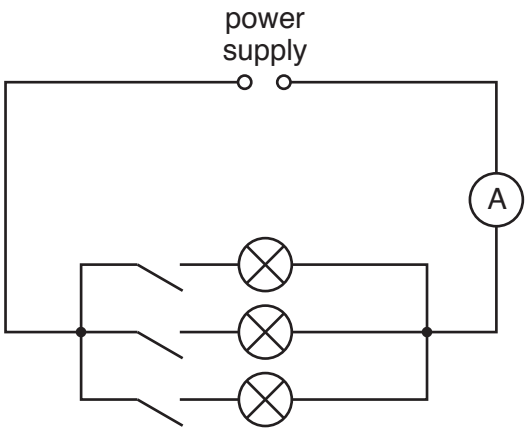

Fig. 7.1

The switches are closed. Each lamp is rated at 60 W and operates at its normal working voltage of 110 V.

(a) Calculate:

View solution

(i) the current in each lamp

current = ...[2]

(ii) the current in the ammeter

View solution

current = ...[1]

(iii) the voltage of the power supply.

View solution

voltage = ...[1]

© UCLES 2018

(b) (i) Calculate the resistance of the filament of one of the lamps when working normally.

View solution

resistance = ...[2]

(ii) Another lamp X has a filament with twice the resistance of each lamp in the circuit of Fig. 7.1. The material and the temperature of the filament in lamp X is the same as the filaments in the lamps in Fig. 7.1.

In Table 7.1, tick any box in the right-hand column that shows a possible difference between the filament of lamp X and a filament of one of the lamps in the circuit.

View solution

Table 7.1

X has half the length	
X has twice the length	
X has one quarter the area of cross-section	
X has half the area of cross-section	
X has two times the area of cross-section	
X has four times the area of cross-section	

[2]

[Total: 8]

© UCLES 2018

8 (a) (i) Fig. 8.1 shows a positively charged cube of insulating material. The cube is fixed to a piece of wood that is floating on water. A negatively charged rod is held above the piece of wood and brought close to the cube, as shown.

View solution

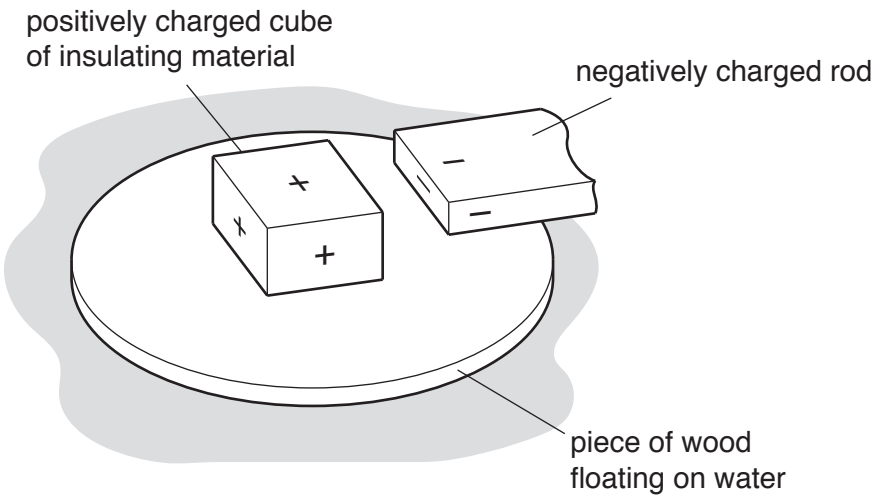

Fig. 8.1

State and explain any movement of the piece of wood.

.....

.....

.....

.....[2]

(ii) Fig. 8.2 shows two cubes of insulating material. One is positively charged and the other is negatively charged. The cubes are fixed to a piece of wood that is floating on water. Charged rods are held above the piece of wood and brought close to the cubes, as shown.

View solution

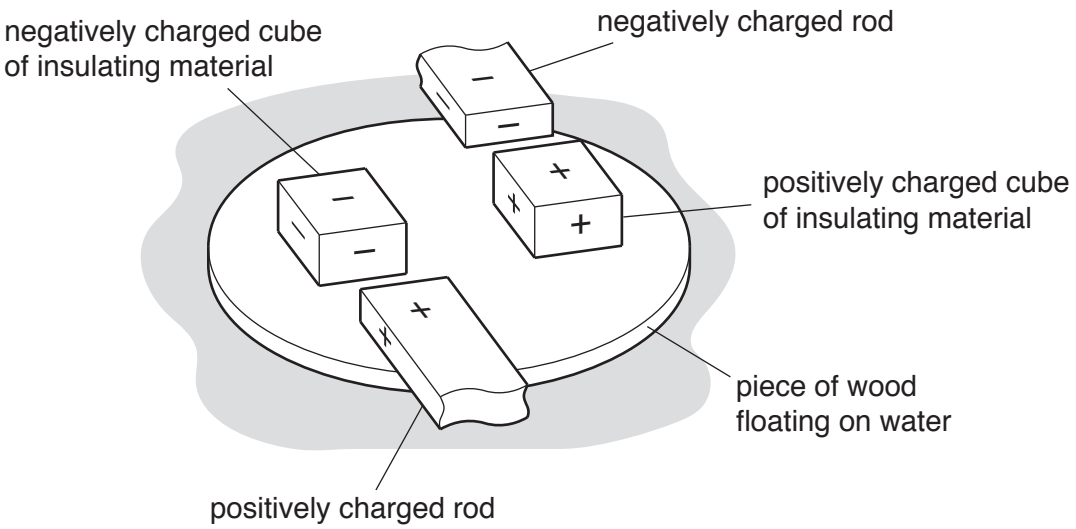

Fig. 8.2

State and explain any movement of the piece of wood.

.....

.....

.....

.....[2]

(b) In terms of a simple electron model, describe the differences between conductors and insulators.

conductors .....

.....

.....

insulators .....

.....

.....

[2]

(c) On Fig. 8.3, draw the electric field pattern around a single point positive charge.

View solution



Fig. 8.3

[1]

[Total: 7]

9 Fig. 9.1 shows a permanent bar magnet next to a circuit that contains a coil and a galvanometer.

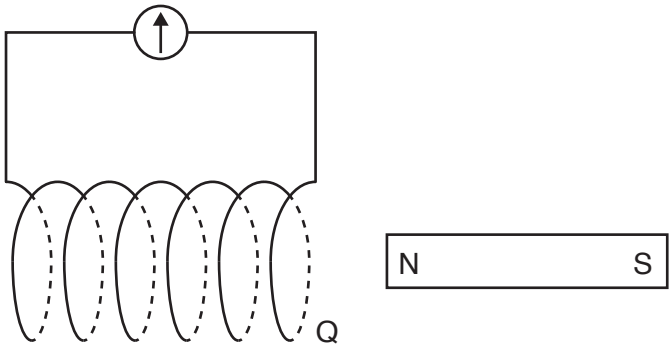

Fig. 9.1

(a) Suggest a metal from which the magnet is made.

View solution

.....[1]

(b) The magnet is moved to the left and inserted a small distance into the coil. The galvanometer deflects briefly and shows that there is a current in the coil.

(i) Explain why there is a current in the coil.

View solution

.....

.....

.....

.....[2]

(ii) As the magnet is moving near to the coil, end Q of the coil behaves as a magnetic pole.

State the polarity of end Q and explain why it has this polarity.

View solution

.....

.....

.....[2]

(c) Suggest **two** ways in which the deflection of the galvanometer can be reversed.

View solution

1. .....

.....

2. .....

.....

[2]

[Total: 7]

© UCLES 2018

10 (a) A detector of ionising radiation measures the background count rate in a classroom where there are no radioactive samples present.

View solution

The readings, in counts/minute, taken over a period of time are shown in Table 10.1.

Table 10.1

counts/minute	16	12	14	16	15	17

(i) State **two** possible sources of this background radiation.

.....

.....[2]

(ii) Explain why the readings are not the same.

View solution

.....

.....[1]

(b) With no radioactive sample present, a scientist records a background radiation count of 40 counts/minute.
He brings a radioactive sample close to the detector. The count rate increases to 200 counts/minute.
After 24 days the count rate is 50 counts/minute.

View solution

Calculate the half-life of the radioactive sample.

half-life = ...[4]

© UCLES 2018

(c) Draw a line between each type of ionising radiation and its property and another line between the property and its use. One has been done for you.

View solution

Name of ionising radiation	Property	Use
X-ray	It is the most ionising radiation and is most easily absorbed by very small amounts of substance	Remotely detecting leaks in underground water pipes
α-particle	Penetration is affected by small changes in the amount of solid it is passing through	Detecting fractures in bones
β-particle	It is highly penetrating and is poorly ionising	Detecting smoke in a fire alarm system
γ-ray	Can pass easily through soft living tissue. Calcium absorbs more than soft tissue	Detecting a change in the thickness of aluminium foil during its manufacture

[3]

[Total: 10]

Permission to reproduce items where third-party owned material protected by copyright is included has been sought and cleared where possible. Every reasonable effort has been made by the publisher (UCLES) to trace copyright holders, but if any items requiring clearance have unwittingly been included, the publisher will be pleased to make amends at the earliest possible opportunity.

To avoid the issue of disclosure of answer-related information to candidates, all copyright acknowledgements are reproduced online in the Cambridge International Examinations Copyright Acknowledgements Booklet. This is produced for each series of examinations and is freely available to download at www.cie.org.uk after the live examination series.

Cambridge International Examinations is part of the Cambridge Assessment Group. Cambridge Assessment is the brand name of University of Cambridge Local Examinations Syndicate (UCLES), which is itself a department of the University of Cambridge.