Cambridge IGCSE

Cambridge International Examinations
Cambridge International General Certificate of Secondary Education

CANDIDATE NAME									
CENTRE NUMBER						CANDIDATE NUMBER				

PHYSICS **0625/51**

Paper 5 Practical Test **October/November 2018**

1 hour 15 minutes

Candidates answer on the Question Paper.

Additional Materials: As listed in the Confidential Instructions.

READ THESE INSTRUCTIONS FIRST

Write your Centre number, candidate number and name in the spaces at the top of the page.
Write in dark blue or black pen.
You may use an HB pencil for any diagrams or graphs.
Do not use staples, paper clips, glue or correction fluid.
DO **NOT** WRITE IN ANY BARCODES.

Answer **all** questions.
You are advised to spend about 20 minutes on each of questions 1 to 3, and 15 minutes on question 4.
Electronic calculators may be used.
You may lose marks if you do not show your working or if you do not use appropriate units.

At the end of the examination, fasten all your work securely together.
The number of marks is given in brackets [ ] at the end of each question or part question.

For Examiner's Use	
1	
2	
3	
4	
Total	

This syllabus is approved for use in England, Wales and Northern Ireland as a Cambridge International Level 1/Level 2 Certificate.

This document consists of **12** printed pages and **4** blank pages.

© UCLES 2018

CAMBRIDGE International Examinations

—

1 In this experiment, you will determine the spring constant k of a spring by two methods.

Some of the apparatus has been set up for you.

Carry out the following instructions, referring to Fig. 1.1 and Fig. 1.2.

Method 1

(a) Measure the unstretched length l_0 of the spring, in mm.

View solution

l_0 = ...mm [1]

(b) Hang the 300 g mass on the spring, as shown in Fig. 1.1.

View solution

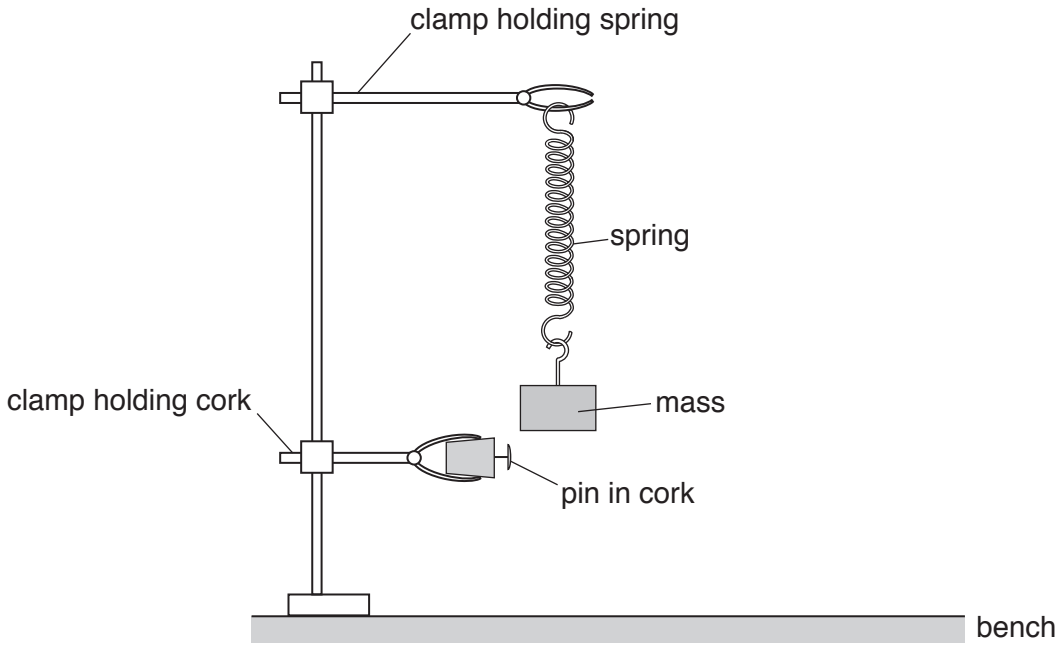

Fig. 1.1

(i) Measure the new length l of the spring.

l = ...mm [1]

(ii) Use the equation $e = (l - l_0)$ to calculate the extension e of the spring.

View solution

e = ...mm [1]

(iii) Calculate a value for the spring constant k using the equation $k = \frac{F}{e}$, where $F = 3.0$ N.

View solution

k = ... N/mm [1]

© UCLES 2018

Method 2

(c) Adjust the position of the lower clamp so that the pin is level with the bottom of the mass when the mass is not moving. Pull the mass down about 1.5 cm and release it so that it oscillates up and down. Fig. 1.2 shows one complete oscillation.

View solution

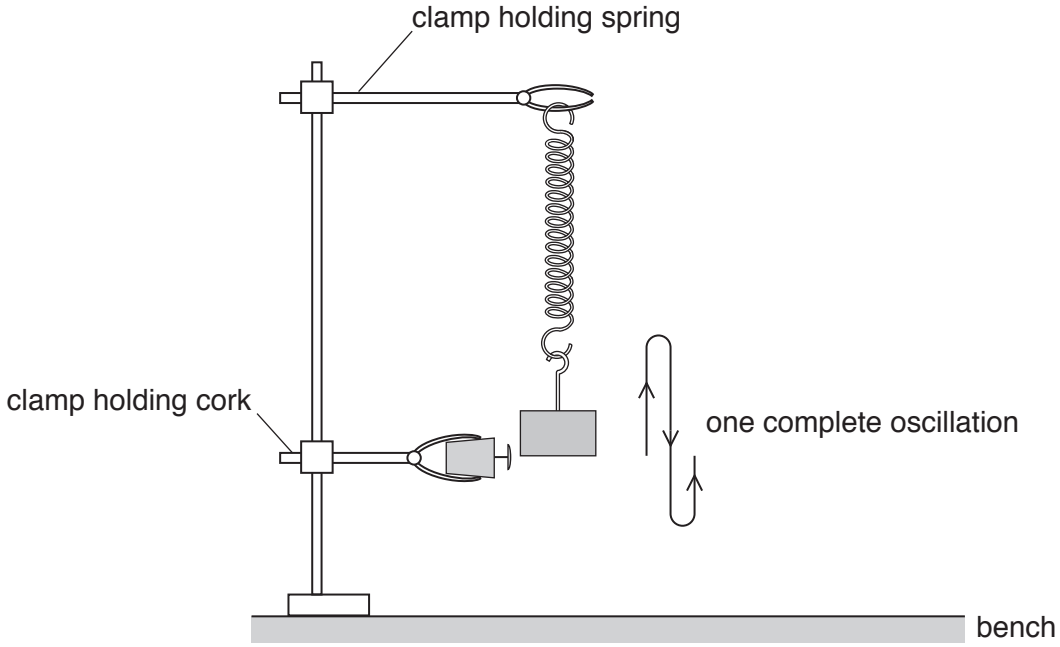

Fig. 1.2

(i) Measure the time t taken for 10 complete oscillations. Start the stopwatch as the bottom of the mass passes the pin.

t = ... s [1]

(ii) 1. Calculate the time T taken for one complete oscillation.

T = ... s

2. Calculate T^2.

View solution

T^2 = ...
[1]

(iii) Calculate the spring constant k using the equation $k = \frac{0.040m}{T^2}$, where $m = 0.300$ kg.

View solution

k = ... N/mm [1]

(d) State and explain briefly whether your two values for k are the same within the limits of experimental accuracy.

statement .....

explanation .....

.....

[2]

(e) A student states that repeating Method 1 with different masses would improve the reliability of the value obtained for k.

Suggest additional values for the mass m that you would use when repeating the experiment to improve the reliability.

.....

.....

.....[2]

[Total: 11]

View solution

BLANK PAGE

2 In this experiment, you will determine the resistance of a piece of wire.

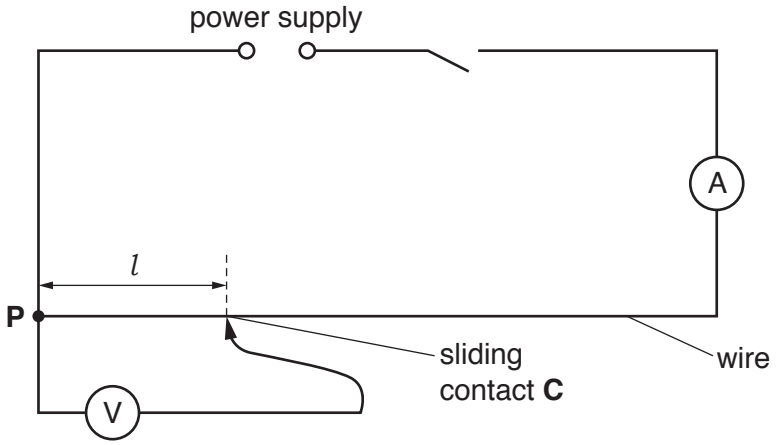

Fig. 2.1

(a) (i) Carry out the following instructions, referring to Fig. 2.1.

View solution

- Switch on.
- Measure the current I in the circuit.

I = ...[1]

(ii) Place the sliding contact **C** at a distance l = 20.0 cm from **P**.

View solution

- Measure, and record in Table 2.1, the reading on the voltmeter.
- Repeat the procedure using l values of 40.0 cm, 60.0 cm, 80.0 cm and 100.0 cm.
- Switch off.

Table 2.1

l/cm	V/V
20.0	
40.0	
60.0	
80.0	
100.0	

[2]

© UCLES 2018

(b) Plot a graph of V/V (y-axis) against l/cm (x-axis). Start both axes at the origin (0,0).

View solution

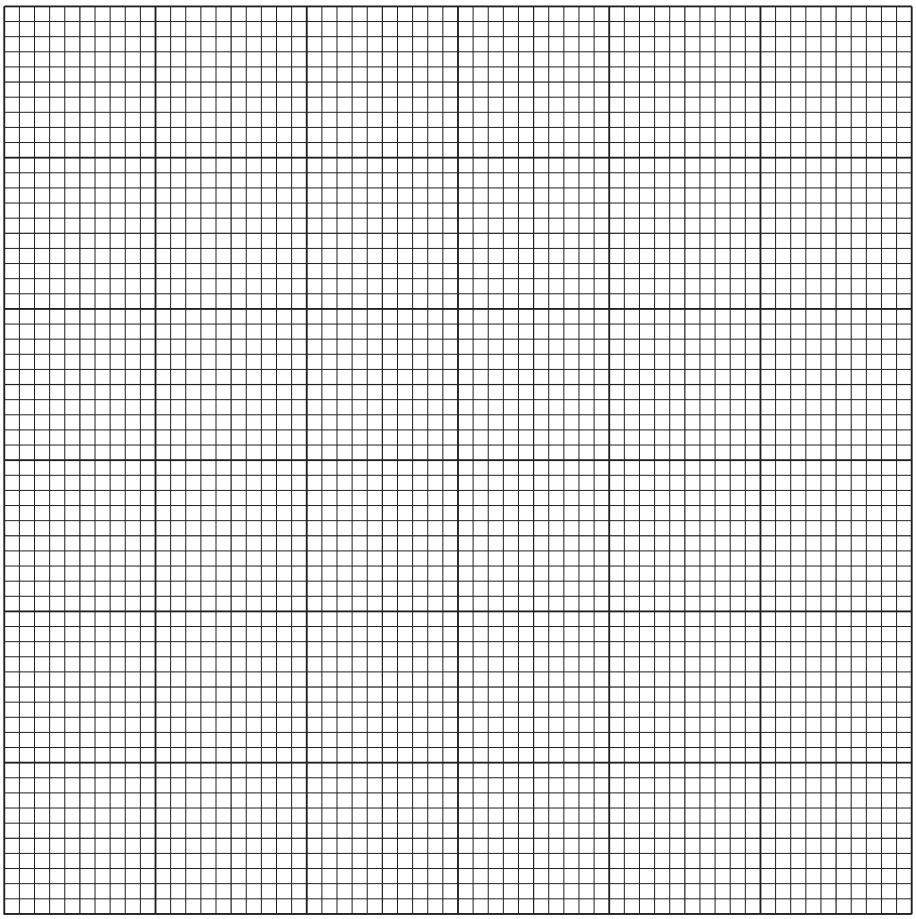

[4]

(c) **(i)** Determine the gradient G of the graph. Show clearly on the graph how you obtained the necessary information.

View solution

G = ...[2]

(ii) Calculate the resistance R of each centimetre of the wire. Use the equation $R = \frac{Gk}{I}$, where k = 1.0 V/cm and I is the current recorded in **(a)(i)**. Include the unit.

View solution

R = ...[2]

[Total: 11]

3 In this experiment, you will determine the refractive index *n* of the material of a transparent block.

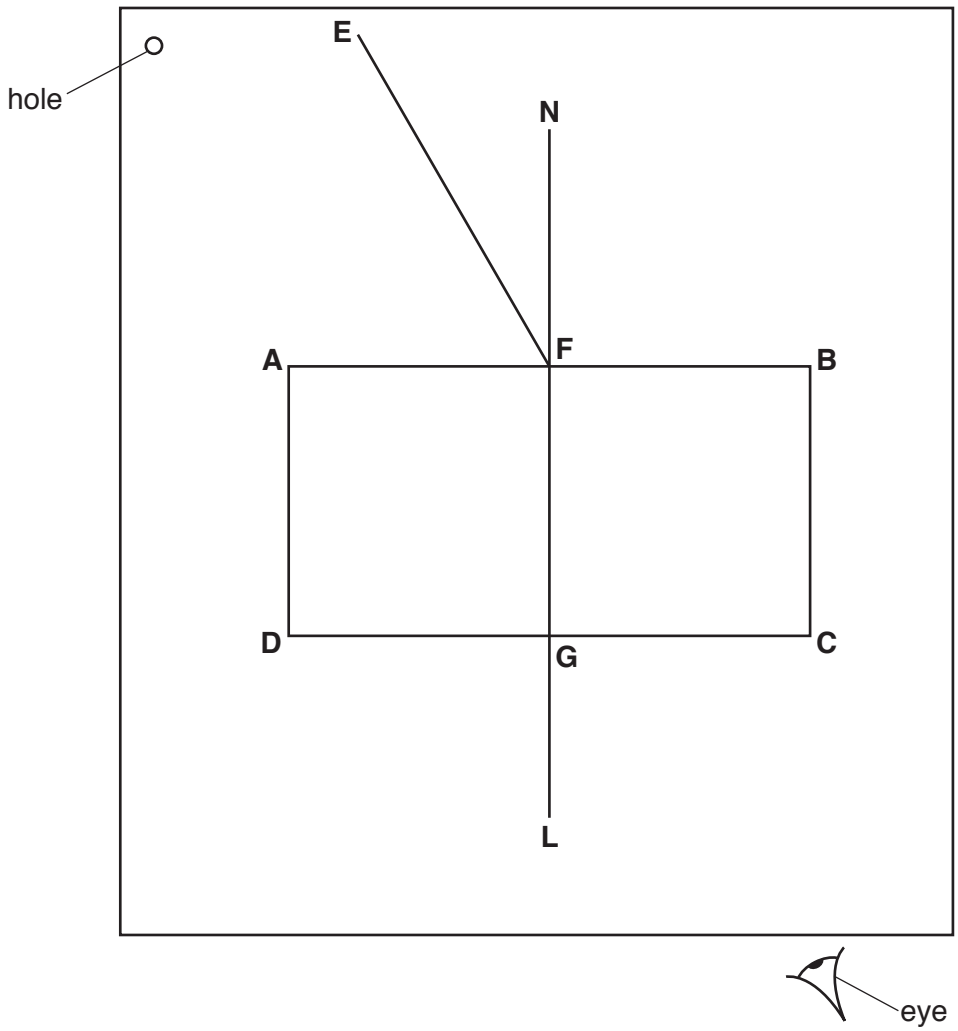

Fig. 3.1

(a) Carry out the following instructions, using the separate ray-trace sheet provided. Refer to Fig. 3.1 for guidance.

- Place the transparent block, largest face down, on the ray-trace sheet supplied. The block should be approximately in the middle of the paper.
- Draw and label the outline of the block **ABCD**.
- Remove the block and draw the normal **NL** at the centre of side **AB**. Continue the normal so that it passes through side **CD** of the block.
- Label the point **F** where **NL** crosses **AB**.
- Label the point **G** where **NL** crosses **CD**.

[2]

View solution

(b) • Draw the line **EF** at an angle $i = 30°$ to the normal as shown in Fig. 3.1.

View solution

- Place the paper on the pin board.
- Place two pins P_1 and P_2 on line **EF** at a suitable distance apart for this experiment.
- Replace the block and look from the position of the eye shown in Fig. 3.1, to observe the images of P_1 and P_2 through side **CD** of the block. Adjust your line of sight until the images of P_1 and P_2 appear one behind the other.
- Place two pins P_3 and P_4 between your eye and the block so that P_3, P_4, and the images of P_1 and P_2 seen through the block, appear one behind the other.
- Label the positions of P_1, P_2, P_3 and P_4.
- Remove the block and the pins.
- Draw a line joining the positions of P_3 and P_4. Continue the line until it meets the normal **NL**.
- Label the point **H** where the line meets side **CD**. Draw the line **FH**.

[1]

(c) (i) Measure and record the length *a* of the line **GH**.

View solution

a = ...[1]

(ii) Measure and record the length *b* of the line **FH**.

View solution

b = ...[1]

(iii) Calculate the refractive index *n* using the equation $n = \frac{0.50b}{a}$.

View solution

n = ...[2]

(d) Repeat the procedure in **(b)** using an angle $i = 45°$.

View solution

(i) Repeat the measurements in **(c)(i)** and **(c)(ii)** for $i = 45°$.

a = ...

b = ...

[1]

(ii) Calculate the refractive index *n* using the equation $n = \frac{0.71b}{a}$.

View solution

n = ...[1]

(e) A student carries out this experiment with care and expects the two values of refractive index *n* obtained in this experiment to be equal.

State **two** difficulties with this type of experiment that could explain any difference in the two values of *n*.

1. .....

.....

2. .....

.....

[2]

[Total: 11]

View solution

Tie your ray-trace sheet into this Question Booklet between pages 10 and 11.

© UCLES 2018

BLANK PAGE

4 A student is investigating the relationship between the power produced by an electrical heater and the time taken to heat a beaker of water. The power of the heater is given by the equation $P = VI$, where V is the potential difference (p.d.) across the heater and I is the current in the heater.

Plan an experiment to investigate the relationship between the power produced by an electrical heater and the time taken to heat a beaker of water.

View solution

You are **not** required to carry out this investigation.

The following apparatus is available:

ammeter
voltmeter
0–12 V variable power supply
250 cm^3 beaker
heater
thermometer
stopwatch

The student can also use other apparatus and materials that are usually available in a school laboratory.

You should:

- complete the diagram in Fig. 4.1 to show the circuit that you would use
- explain briefly how you would carry out the investigation
- state the key variables that you would control
- draw a table with column headings, to show how you would display your readings (you are **not** required to enter any readings in the table)
- explain how you would use your results to reach a conclusion.

© UCLES 2018

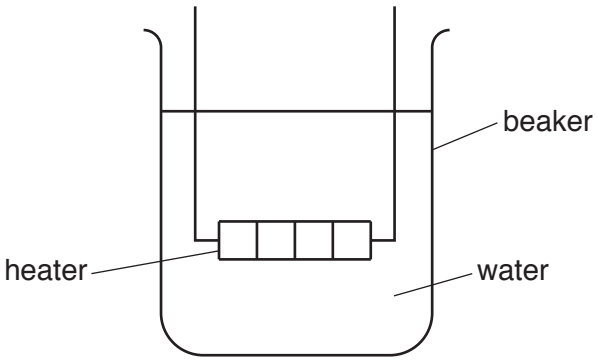

Fig. 4.1

.....

.....

.....

.....

.....

.....

.....

.....

.....

.....

.....

.....

.....

.....

.....

.....

.....

.....

.....

.....

.....

.....

.....[7]

[Total: 7]

BLANK PAGE

© UCLES 2018

BLANK PAGE

Permission to reproduce items where third-party owned material protected by copyright is included has been sought and cleared where possible. Every reasonable effort has been made by the publisher (UCLES) to trace copyright holders, but if any items requiring clearance have unwittingly been included, the publisher will be pleased to make amends at the earliest possible opportunity.

To avoid the issue of disclosure of answer-related information to candidates, all copyright acknowledgements are reproduced online in the Cambridge International Examinations Copyright Acknowledgements Booklet. This is produced for each series of examinations and is freely available to download at www.cie.org.uk after the live examination series.

Cambridge International Examinations is part of the Cambridge Assessment Group. Cambridge Assessment is the brand name of University of Cambridge Local Examinations Syndicate (UCLES), which is itself a department of the University of Cambridge.

© UCLES 2018