Cambridge IGCSE

Cambridge International Examinations
Cambridge International General Certificate of Secondary Education

CANDIDATE NAME									
CENTRE NUMBER						CANDIDATE NUMBER				

PHYSICS **0625/52**

Paper 5 Practical Test **October/November 2018**

1 hour 15 minutes

Candidates answer on the Question Paper.

Additional Materials: As listed in the Confidential Instructions.

READ THESE INSTRUCTIONS FIRST

Write your Centre number, candidate number and name in the spaces at the top of the page.
Write in dark blue or black pen.
You may use an HB pencil for any diagrams, graphs or rough working.
Do not use staples, paper clips, glue or correction fluid.
DO **NOT** WRITE IN ANY BARCODES.

Answer **all** questions.
You are advised to spend about 20 minutes on each of questions 1 to 3, and about 15 minutes on question 4.
Electronic calculators may be used.
You may lose marks if you do not show your working or if you do not use appropriate units.

At the end of the examination, fasten all your work securely together.
The number of marks is given in brackets [ ] at the end of each question or part question.

For Examiner's Use	
1	
2	
3	
4	
Total	

This syllabus is approved for use in England, Wales and Northern Ireland as a Cambridge International Level 1/Level 2 Certificate.

This document consists of **12** printed pages.

© UCLES 2018

1 In this experiment, you will determine the spring constant k of a spring.

Carry out the following instructions, referring to Fig. 1.1.

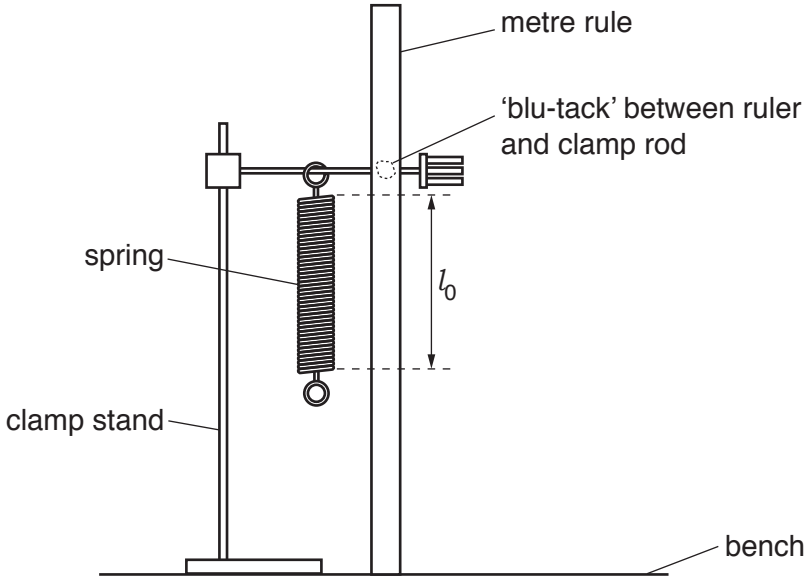

Fig. 1.1

(a) The metre rule is fixed in position close to the spring. **Do not change the position of the metre rule.**

(i) Use the set-square provided to take readings from the metre rule in order to determine the length l_0 of the coiled part of the spring.

Record of readings taken .....

.....[1]

(ii) Record in Table 1.1 the value of the length of the spring l_0 when the load L is 0.00 N. [1]

(iii)
- Place a load of 0.20 N on the spring. Record in Table 1.1 the new length l of the spring.
- Use the equation $e = (l - l_0)$ to calculate the extension e of the spring. Record the value of e in the table.
- Repeat the procedure using loads of 0.40 N, 0.60 N, 0.80 N and 1.00 N. Record all the readings and results in the table.

View solution

© UCLES 2018

Table 1.1

L/N	l/mm	e/mm
0.00		0
0.20		
0.40		
0.60		
0.80		
1.00		

[2]

(b) Plot a graph of L/N (y-axis) against e/mm (x-axis).

View solution

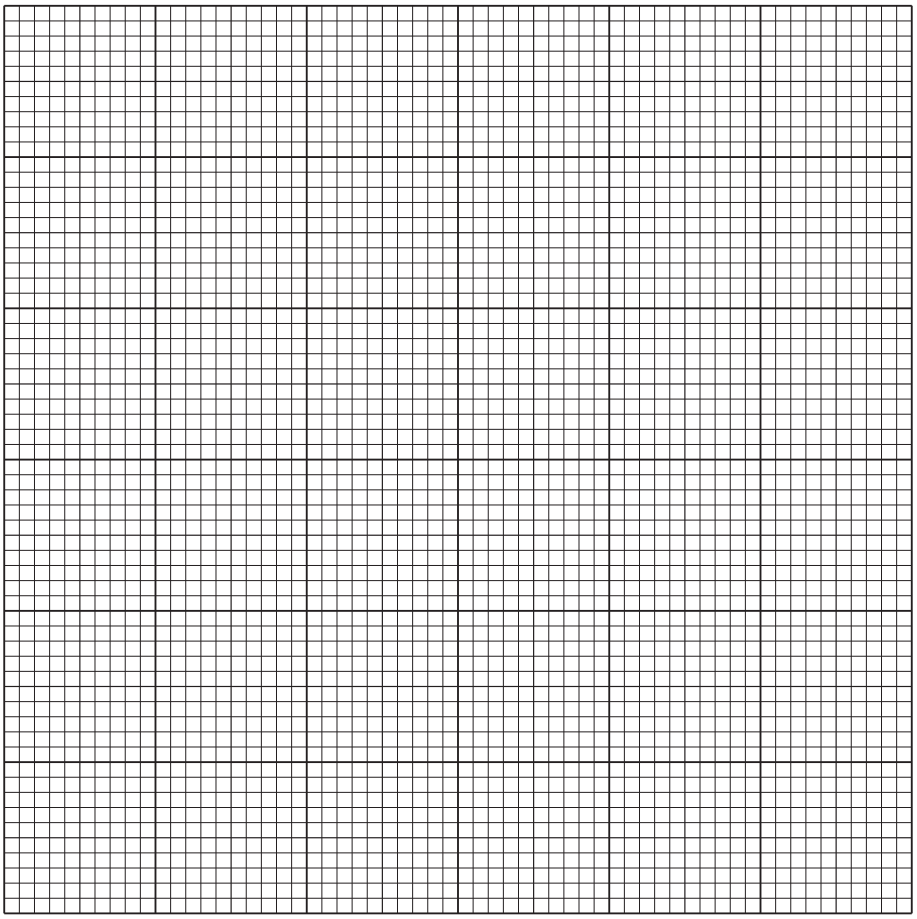

[4]

(c) Determine the gradient G of the graph. Show clearly on the graph how you obtained the necessary information.

View solution

G = ...[2]

(d) The gradient G is numerically equal to the spring constant k.

Write down a value for k to a suitable number of significant figures for this experiment.

View solution

k = ... N / mm [1]

[Total: 11]

2 In this experiment, you will investigate the power of lamps.

The circuit shown in Fig. 2.1 has been set up for you.

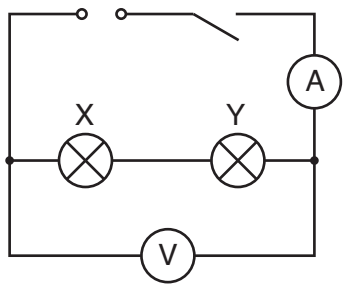

Fig. 2.1

View solution

(a) (i) Switch on.

Measure and record the potential difference (p.d.) V_T across the lamps and the current I_T in the circuit. Switch off.

V_T = ...

I_T = ...
[2]

(ii) Calculate the power P_T produced by the lamp filaments, using the equation $P_T = V_T I_T$.

View solution

P_T = ...[1]

(b) Disconnect the voltmeter. Reconnect the voltmeter across lamp X. Switch on.

(i) Measure and record the potential difference (p.d.) V_X across lamp X and the current I_X in the circuit. Switch off.

V_X = ...

I_X = ...
[1]

(ii) Calculate the power P_X produced by the lamp filament using the equation $P_X = V_X I_X$.

View solution

P_X = ...[1]

(c) Disconnect the voltmeter. Reconnect the voltmeter across lamp Y. Switch on.

View solution

(i) Measure and record the potential difference V_Y across lamp Y and the current I_Y in the circuit. Switch off.

V_Y = ...

I_Y = ...
[1]

(ii) Calculate the power P_Y produced by the lamp filament using the equation $P_Y = V_Y I_Y$.

View solution

P_Y = ...[1]

(d) State and explain briefly whether your two values for power, P_X and P_Y are the same within the limits of experimental accuracy.

statement .....

explanation .....

.....
[2]

View solution

© UCLES 2018

(e) Draw a circuit diagram to show the circuit rearranged so that:

View solution

- the lamps are connected in parallel
- the ammeter will measure the total current in the circuit
- the voltmeter will measure the p.d. across the lamps.

You are **not** asked to set up this circuit.

[2]

[Total: 11]

3 In this experiment, you will determine the refractive index *n* of the material of a transparent block.

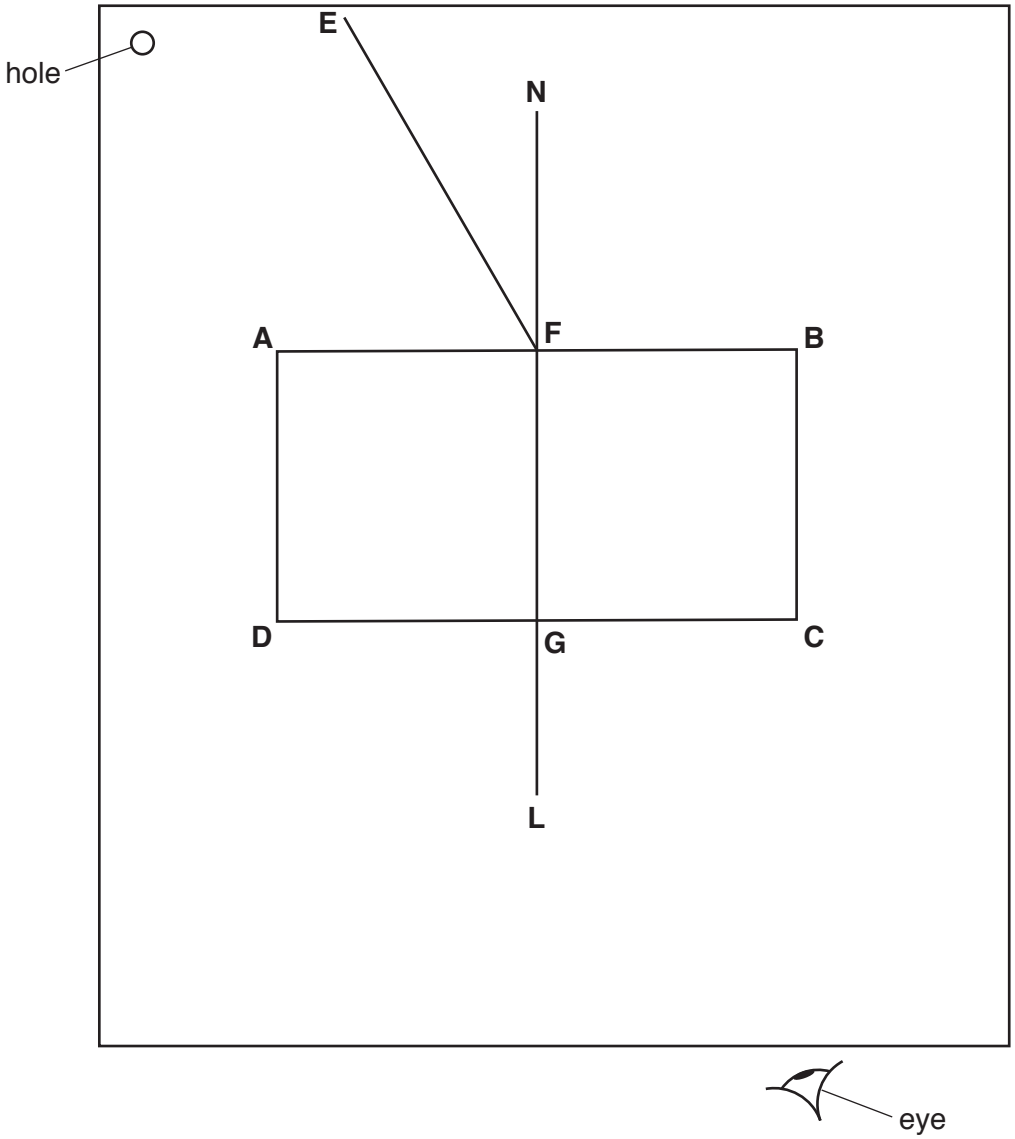

Fig. 3.1

(a) Carry out the following instructions, using the separate ray-trace sheet provided. Refer to Fig. 3.1 for guidance.

- Place the transparent block, largest face down, on the ray-trace sheet supplied. The block should be approximately in the middle of the paper.
- Draw and label the outline of the block **ABCD**.
- Remove the block and draw the normal **NL** at the centre of side **AB**. Continue the normal so that it passes through side **CD** of the block.
- Label the point **F** where **NL** crosses **AB**.
- Label the point **G** where **NL** crosses **CD**.

View solution

[2]

© UCLES 2018

(b)

- Draw the line **EF** at an angle $i = 30°$ to the normal as shown in Fig. 3.1.
- Place the paper on the pin board.
- Place two pins P_1 and P_2 on line **EF** at a suitable distance apart for this experiment.
- Replace the block and look from the position of the eye shown in Fig. 3.1, to observe the images of P_1 and P_2 through side **CD** of the block. Adjust your line of sight until the images of P_1 and P_2 appear one behind the other.
- Place two pins P_3 and P_4 between your eye and the block so that P_3, P_4, and the images of P_1 and P_2, seen through the block, appear one behind the other.
- Label the positions of P_1, P_2, P_3 and P_4.
- Remove the block and the pins.
- Draw a line joining the positions of P_3 and P_4. Continue the line until it meets the normal **NL**.
- Label the point **J** where the line meets the normal **NL**.
- Label the point **H** where the line meets side **CD**. Draw the line **FH**.

[1]

(c) (i) Measure and record the length a of the line **FH**.

$a =$ .....[1]

(ii) Measure and record the length b of the line **HJ**.

$b =$ .....[1]

(iii) Calculate the refractive index n using the equation $n = \frac{a}{b}$

$n =$ .....[2]

(d) Repeat the procedure in **(b)** using the angle of incidence $i = 40°$.

(i) Repeat the measurements in **(c)** for $i = 40°$.

$a =$ .....

$b =$ .....

[1]

(ii) Calculate the refractive index n using the equation $n = \frac{a}{b}$

$n =$ .....[1]

© UCLES 2018

(e) A student carries out this experiment with care and expects the two values of refractive index *n* obtained in this experiment to be equal.

State **two** difficulties with this type of experiment that could account for any difference in the two values of *n*.

1. .....

.....

2. .....

.....

[2]

[Total: 11]

View solution

Tie your ray-trace sheet into this Question Booklet between pages 8 and 9.

© UCLES 2018

4 A student is investigating whether the type of container affects the time taken for water to be heated from room temperature to boiling point.

View solution

The following apparatus is available:

250 cm^3 copper can
250 cm^3 aluminium can
250 cm^3 glass beaker
Bunsen burner
measuring cylinder
thermometer
tripod and gauze
stopwatch

Other apparatus normally used in the school laboratory is also available.

Plan an experiment to investigate whether the type of container affects the time taken for water to be heated from room temperature to boiling point. You are **not** required to carry out this investigation.

You should:

- explain briefly how you would carry out the investigation
- state the key variables that you would control
- draw a table, or tables, with column headings to show how you would display your readings (you are **not** required to enter any readings in the table)
- explain briefly how you would use your readings to reach a conclusion.

.....

.....

.....

.....

.....

.....

.....

.....

© UCLES 2018

.....

.....

.....

.....

.....

.....

.....

.....

.....

.....

.....

.....[7]

[Total: 7]

Permission to reproduce items where third-party owned material protected by copyright is included has been sought and cleared where possible. Every reasonable effort has been made by the publisher (UCLES) to trace copyright holders, but if any items requiring clearance have unwittingly been included, the publisher will be pleased to make amends at the earliest possible opportunity.

To avoid the issue of disclosure of answer-related information to candidates, all copyright acknowledgements are reproduced online in the Cambridge International Examinations Copyright Acknowledgements Booklet. This is produced for each series of examinations and is freely available to download at www.cie.org.uk after the live examination series.

Cambridge International Examinations is part of the Cambridge Assessment Group. Cambridge Assessment is the brand name of University of Cambridge Local Examinations Syndicate (UCLES), which is itself a department of the University of Cambridge.