Cambridge IGCSE

Cambridge International Examinations
Cambridge International General Certificate of Secondary Education

CANDIDATE NAME									
CENTRE NUMBER						CANDIDATE NUMBER			

PHYSICS **0625/61**

Paper 6 Alternative to Practical **October/November 2018**

1 hour

Candidates answer on the Question Paper.

No Additional Materials are required.

READ THESE INSTRUCTIONS FIRST

Write your Centre number, candidate number and name on all the work you hand in.
Write in dark blue or black pen.
You may use an HB pencil for any diagrams or graphs.
Do not use staples, paper clips, glue or correction fluid.
DO **NOT** WRITE IN ANY BARCODES.

Answer **all** questions.
Electronic calculators may be used.
You may lose marks if you do not show your working or if you do not use appropriate units.

At the end of the examination, fasten all your work securely together.
The number of marks is given in brackets [ ] at the end of each question or part question.

This syllabus is approved for use in England, Wales and Northern Ireland as a Cambridge International Level 1/Level 2 Certificate.

This document consists of **13** printed pages and **3** blank pages.

© UCLES 2018

CAMBRIDGE International Examinations

1 A student is determining the spring constant k of a spring by two methods.

Fig. 1.2 shows how the apparatus is used.

Method 1

(a) On Fig. 1.1, measure the unstretched length l_0 of the spring, in mm.

View solution

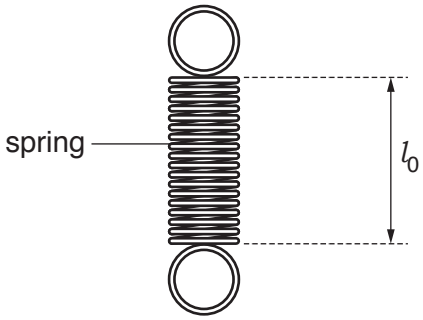

Fig. 1.1

l_0 = ... mm [1]

(b) The student attaches the spring to the clamp as shown in Fig. 1.2.

He hangs a 300 g mass on the spring.

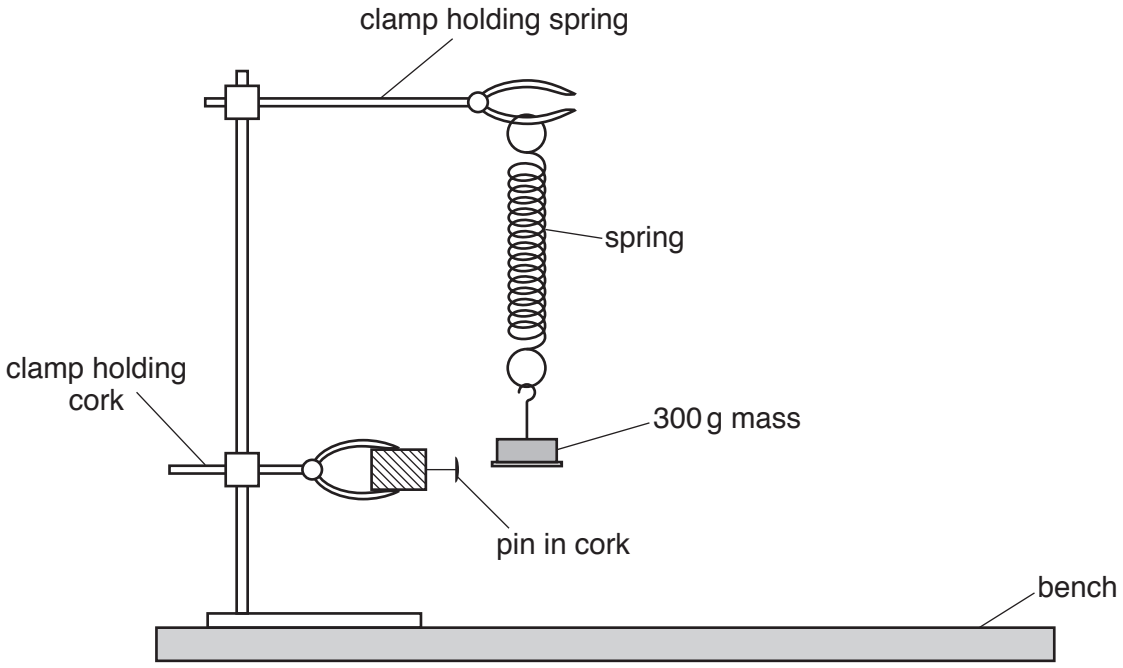

Fig. 1.2

He measures the new length l of the spring.

l = 53 mm

(i) Calculate the extension e of the spring using the equation $e = l - l_0$.

View solution

e = ... mm [1]

(ii) Calculate a value for the spring constant k using the equation $k = \frac{F}{e}$, where $F = 3.0\,\text{N}$.

View solution

k = ... N/mm [1]

Method 2

(c) The student pulls the mass down a short distance and releases it so that it oscillates up and down. Fig. 1.3 shows the time t taken for 10 complete oscillations.

View solution



Fig. 1.3

(i) Record the time t taken for 10 complete oscillations.

t = ... [1]

(ii) **1.** Calculate the time T taken for one complete oscillation.

View solution

T = ...

2. Calculate T^2.

T^2 = ...
[2]

(iii) Calculate the spring constant k using the equation $k = \frac{0.040\,m}{T^2}$, where $m = 0.300\,\text{kg}$.

View solution

k = ... N/mm [1]

(d) State and explain whether your two values for k are the same within the limits of experimental accuracy.

statement .....

explanation .....

.....

[2]

(e) A student states that repeating Method 1 with different masses would improve the reliability of the value obtained for k.

Suggest additional values for the mass m that you would use when repeating the experiment to improve the reliability.

.....

.....

..... [2]

[Total: 11]

View solution

BLANK PAGE

2 A student is determining the resistance of a piece of wire.

Fig. 2.1 shows the circuit she uses.

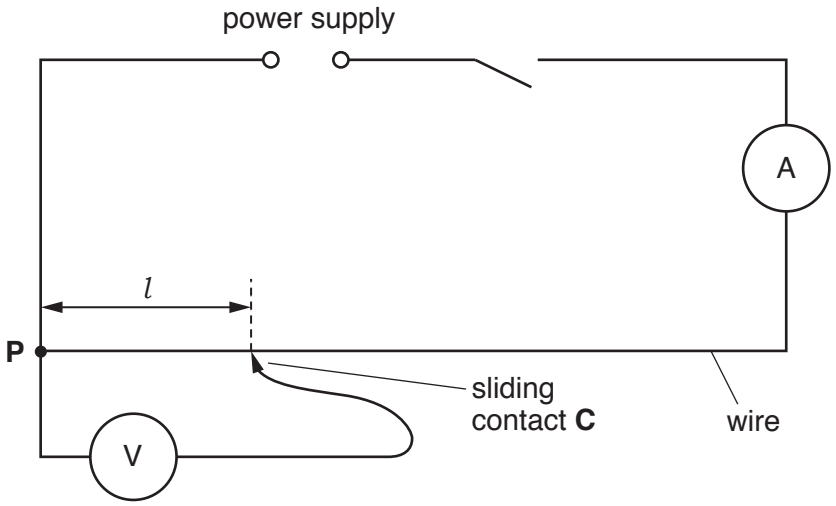

Fig. 2.1

(a) Record the current I in the circuit, as shown on the ammeter in Fig. 2.2.

I = ... [1]

View solution

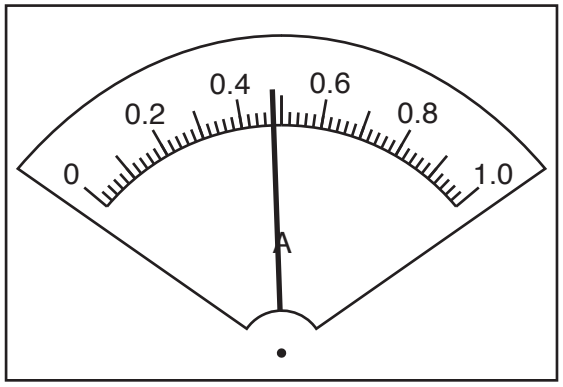

Fig. 2.2

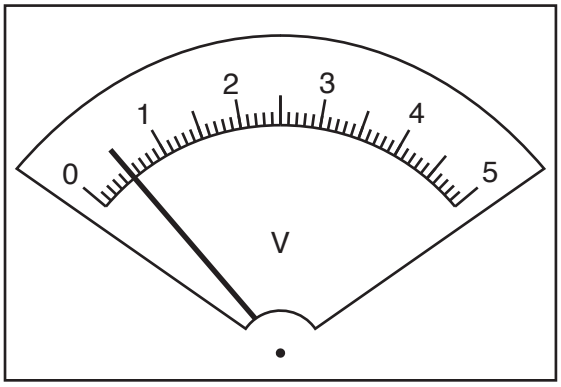

Fig. 2.3

(b) The student places the sliding contact **C** at a distance l = 20.0 cm from **P**. The voltmeter reading is shown in Fig. 2.3. Record the voltmeter reading in Table 2.1 for l = 20.0 cm. [1]

View solution

© UCLES 2018

(c) The student repeats the procedure using values of $l = 40.0\,\text{cm}$, $60.0\,\text{cm}$, $80.0\,\text{cm}$ and $100.0\,\text{cm}$. The readings are shown in Table 2.1.

Complete the column headings in the table. [1]

View solution

Table 2.1

l/	V/
20.0	
40.0	0.9
60.0	1.6
80.0	2.0
100.0	2.4

(d) Plot a graph of V/V (y-axis) against l/cm (x-axis). Start both axes at the origin (0, 0).

View solution

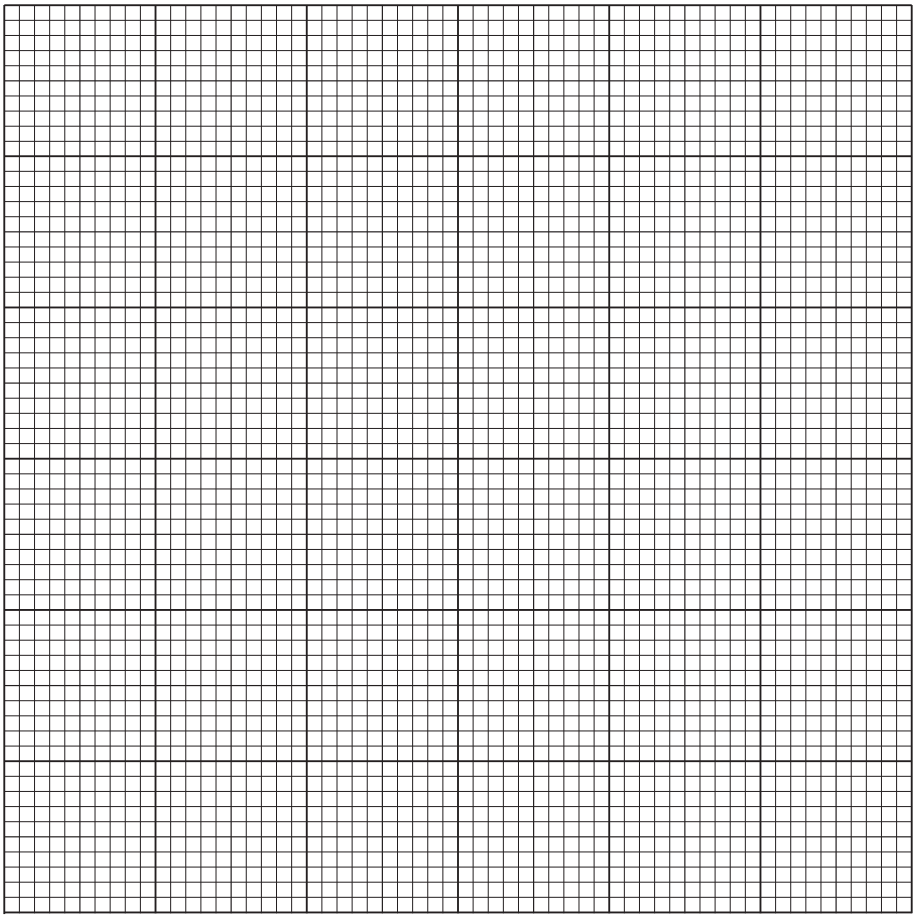

[4]

(e) (i) Determine the gradient G of the graph. Show clearly on the graph how you obtained the necessary information.

View solution

G = ... [2]

(ii) Calculate the resistance R of each centimetre of the wire. Use the equation $R = \frac{Gk}{I}$, where k = 1.0 V / cm and where I is the current recorded in **(a)**.

Include the unit.

View solution

R = ... [2]

[Total: 11]

© UCLES 2018

BLANK PAGE

3 A student is determining the refractive index *n* of the material of a transparent block.

Fig. 3.1 shows the outline **ABCD** of the transparent block.

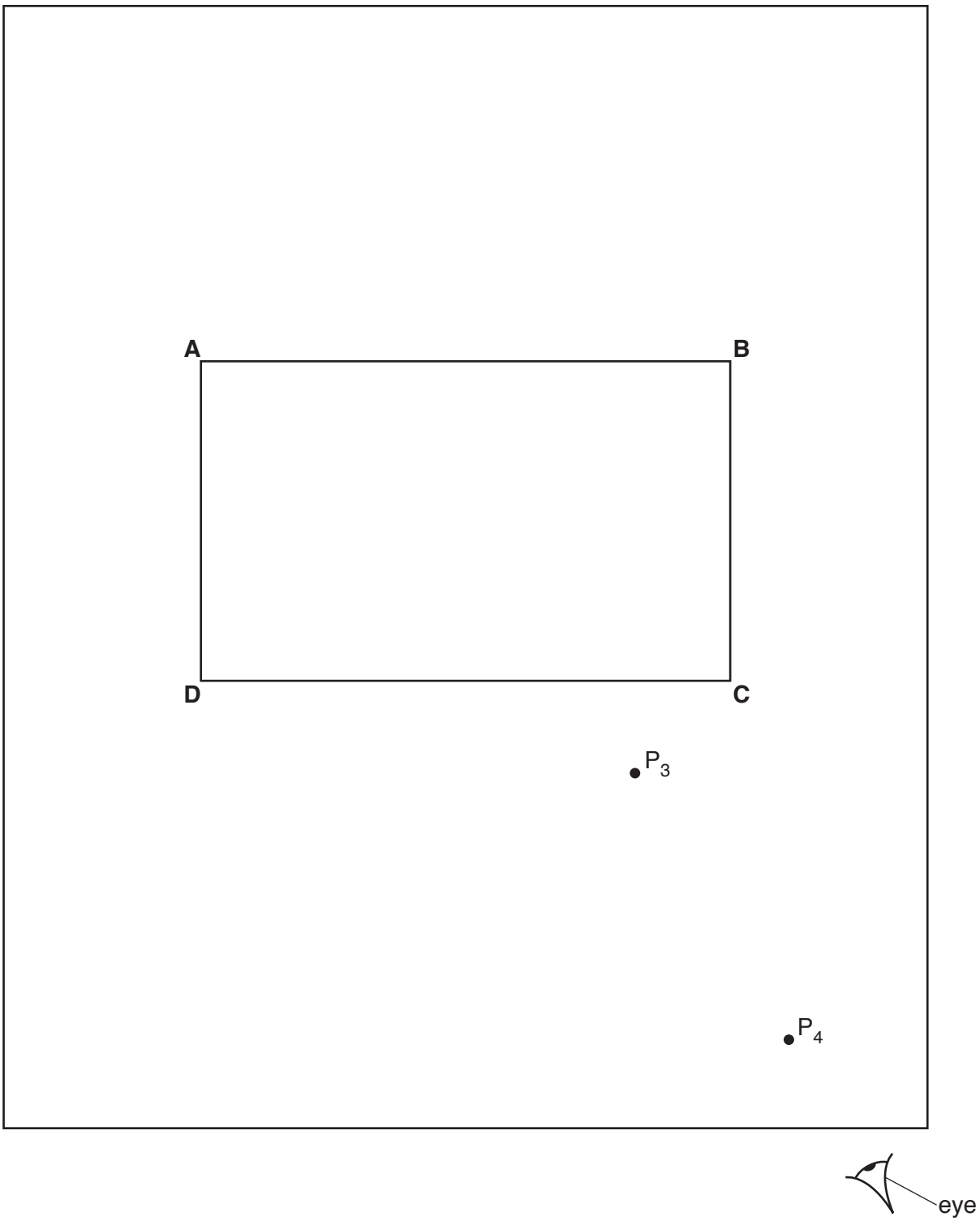

Fig. 3.1

© UCLES 2018

(a) (i) On Fig. 3.1:

View solution

- draw a normal **NL** at the centre of side **AB**
- continue the normal so that it passes through side **CD** of the block
- label the point **F** where **NL** crosses **AB**
- label the point **G** where **NL** crosses **CD**. [1]

(ii) Draw a line **EF** at an angle $i = 30°$ to the left of the normal and above side **AB**. [1]

(iii) Mark the positions of two pins P_1 and P_2 on line **EF** placed at a suitable distance apart for this type of ray-tracing experiment. [1]

(b) The student observes the images of P_1 and P_2 through side **CD** of the block so that the images of P_1 and P_2 appear one behind the other.

He places two pins P_3 and P_4 between his eye and the block so that P_3, P_4 and the images of P_1 and P_2 seen through the block, appear one behind the other.

View solution

The positions of P_3 and P_4 are marked on Fig. 3.1.

(i)
- Draw a line joining the positions of P_3 and P_4. Continue the line until it meets the normal **NL**.
- Label the point **H** where the line meets side **CD**. Draw the line **FH**.

[1]

(ii) Measure and record the length a of the line **GH**.

View solution

$a =$ ..... [1]

(iii) Measure and record the length b of the line **FH**.

View solution

$b =$ ..... [1]

(iv) Calculate the refractive index n using the equation $n = \frac{0.5b}{a}$.

View solution

$n =$ ..... [1]

(c) The student repeats the procedure using the angle of incidence $i = 45°$.

$a =$ ..... 3.2 ..... cm

$b =$ ..... 6.9 ..... cm

Calculate the refractive index n, using the equation $n = \frac{0.71b}{a}$.

View solution

$n =$ ..... [1]

(d) The student expected the two values of refractive index n obtained in this experiment to be equal.

State **two** difficulties with this type of experiment that could explain any difference in the two values of n.

1. .....

.....

2. .....

.....

[2]

(e) A student suggests precautions to take in this experiment to obtain reliable results.
Tick **one** box to indicate the most sensible suggestion.

View solution

- ☐ Carry out the experiment in a darkened room.
- ☐ Use pins that are taller than the height of the block.
- ☐ View the bases of the pins.
- ☐ View the pins with one eye closed.

[1]

[Total: 11]

© UCLES 2018

BLANK PAGE

4 A student is investigating the relationship between the power produced by an electrical heater and the time taken to heat a beaker of water. The power of the heater is given by the equation $P = VI$, where V is the potential difference (p.d.) across the heater and I is the current in the heater.

Plan an experiment to investigate the relationship between the power produced by an electrical heater and the time taken to heat a beaker of water.

View solution

The following apparatus is available:

ammeter
voltmeter
0–12 V variable power supply
250 cm^3 beaker
heater
thermometer
stopwatch

The student can also use other apparatus and materials that are usually available in a school laboratory.

You should:

- complete the diagram in Fig. 4.1 to show the circuit that you would use
- explain briefly how you would carry out the investigation
- state the key variables that you would control
- draw a table with column headings, to show how you would display your readings (you are **not** required to enter any readings in the table)
- explain how you would use your results to reach a conclusion.

© UCLES 2018

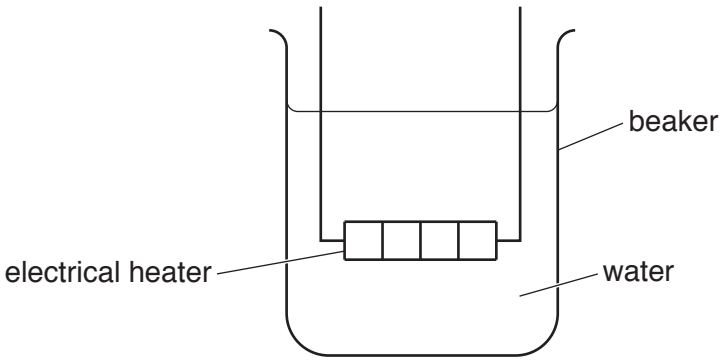

Fig. 4.1

.....

.....

.....

.....

.....

.....

.....

.....

.....

.....

.....

.....

.....

.....

.....

.....

.....

.....

.....

.....

.....

..... [7]

[Total: 7]

Permission to reproduce items where third-party owned material protected by copyright is included has been sought and cleared where possible. Every reasonable effort has been made by the publisher (UCLES) to trace copyright holders, but if any items requiring clearance have unwittingly been included, the publisher will be pleased to make amends at the earliest possible opportunity.

To avoid the issue of disclosure of answer-related information to candidates, all copyright acknowledgements are reproduced online in the Cambridge International Examinations Copyright Acknowledgements Booklet. This is produced for each series of examinations and is freely available to download at www.cie.org.uk after the live examination series.

Cambridge International Examinations is part of the Cambridge Assessment Group. Cambridge Assessment is the brand name of University of Cambridge Local Examinations Syndicate (UCLES), which is itself a department of the University of Cambridge.