Cambridge IGCSE

Cambridge International Examinations
Cambridge International General Certificate of Secondary Education

CANDIDATE NAME									
CENTRE NUMBER						CANDIDATE NUMBER			

PHYSICS **0625/62**

Paper 6 Alternative to Practical **October/November 2018**

1 hour

Candidates answer on the Question Paper.

No Additional Materials are required.

READ THESE INSTRUCTIONS FIRST

Write your Centre number, candidate number and name on all the work you hand in.
Write in dark blue or black pen.
You may use an HB pencil for any diagrams or graphs.
Do not use staples, paper clips, glue or correction fluid.
DO **NOT** WRITE IN ANY BARCODES.

Answer **all** questions.

Electronic calculators may be used.
You may lose marks if you do not show your working or if you do not use appropriate units.

At the end of the examination, fasten all your work securely together.
The number of marks is given in brackets [ ] at the end of each question or part question.

This syllabus is approved for use in England, Wales and Northern Ireland as a Cambridge International Level 1/Level 2 Certificate.

© UCLES 2018

1 A student is determining the spring constant k of a spring.

Fig. 1.1 shows the apparatus used.

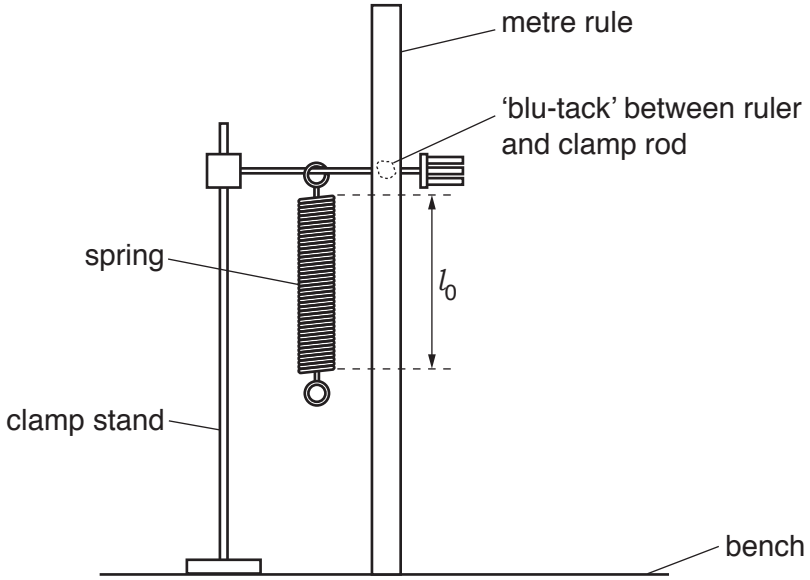

Fig. 1.1

View solution

(a) On Fig. 1.1, measure the unstretched length l_0 of the coiled part of the spring, in mm.

Record this value of length l in Table 1.1 for L = 0.00 N. [1]

(b) On Fig. 1.1, show how a set-square could be used to take readings in order to determine the length l_0 of the coiled part of the spring. [1]

(c) The student places a 0.20 N load on the spring. He records the new length l of the spring in Table 1.1.

He repeats the procedure using loads of 0.40 N, 0.60 N, 0.80 N and 1.00 N. All the readings are recorded in Table 1.1.

View solution

(i) Calculate the extension e of the spring for each value of load L, using the equation $e = (l - l_0)$. Record the values of e in Table 1.1. [1]

View solution

(ii) Complete the column headings in Table 1.1.

View solution

© UCLES 2018

Table 1.1

L/	l/	e/
0.00		0
0.20	31	
0.40	40	
0.60	46	
0.80	55	
1.00	63	

[1]

(d) Plot a graph of L/N (y-axis) against e/mm (x-axis).

View solution

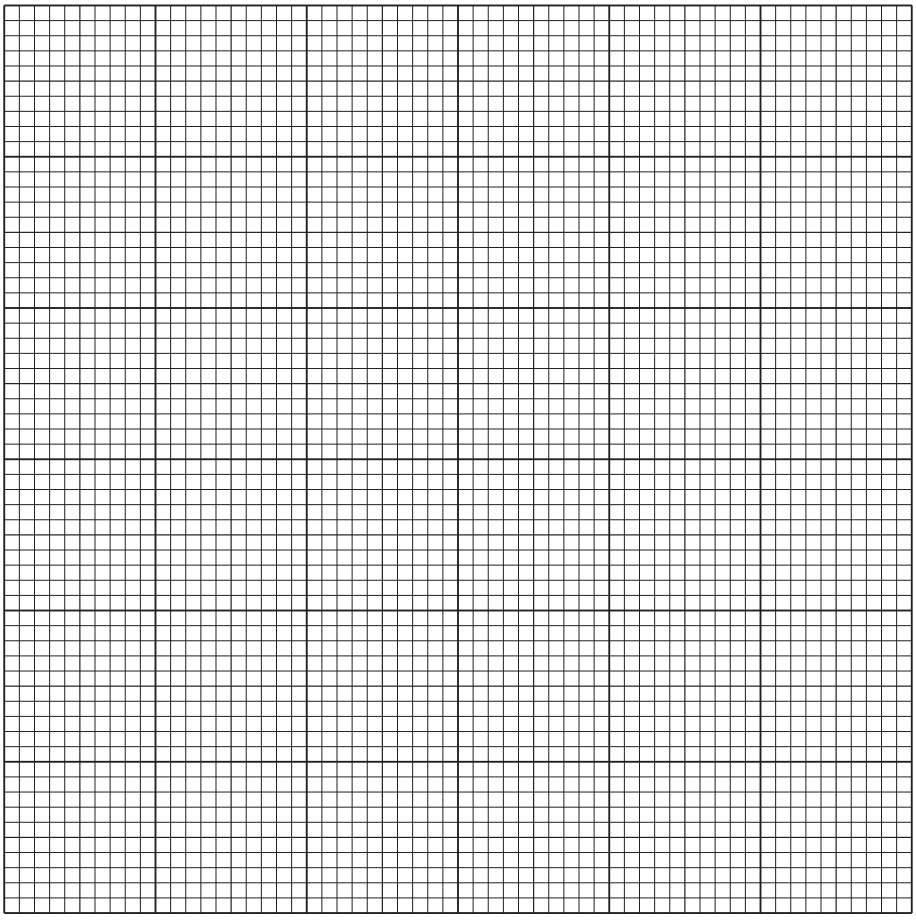

[4]

(e) Determine the gradient G of the graph. Show clearly on the graph how you obtained the necessary information.

View solution

G = ... [2]

(f) The gradient G is numerically equal to the spring constant k.

Write down a value for k to a suitable number of significant figures for this experiment.

View solution

k = ... N/mm [1]

[Total: 11]

2 A student is investigating the power of two lamps.

The circuit is shown in Fig. 2.1.

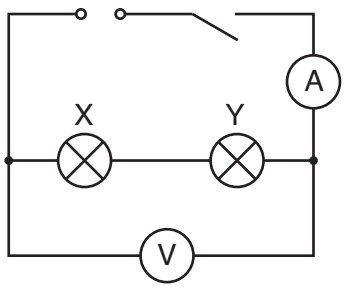

Fig. 2.1

(a) (i) Record the potential difference (p.d.) V_T across the lamps and the current I_T in the circuit, as shown in Fig. 2.2 and Fig. 2.3.

View solution

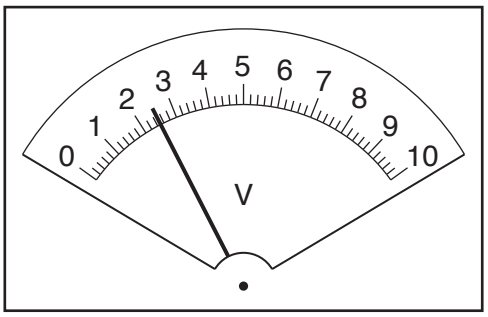

Fig. 2.2

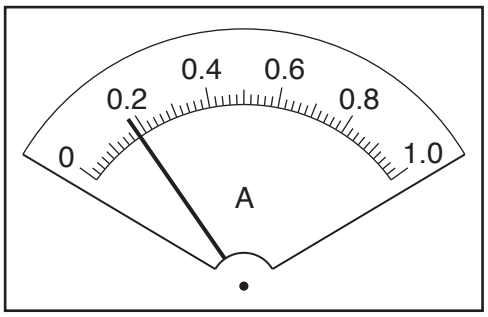

Fig. 2.3

V_T = ... I_T = ...

[2]

(ii) Calculate the power P_T produced by the lamp filaments, using the equation $P_T = V_T I_T$.

View solution

P_T = ... [1]

© UCLES 2018

(b) The student connects the voltmeter across lamp X only. She records the p.d. V_X across lamp X and the current I_X in the circuit.

V_X = ... 1.3 V

I_X = ... 0.18 ..... A

She repeats the procedure with the voltmeter connected across lamp Y only.

V_Y = ... 1.2 V

I_Y = ... 0.18 ..... A

(i) Calculate the power P_X produced by the lamp filament X using the equation $P_X = V_X I_X$, and calculate the power P_Y produced by the lamp filament Y using the equation $P_Y = V_Y I_Y$.

View solution

P_X = ...

P_Y = ...

[1]

(ii) State and explain briefly whether the two values for power P_X and P_Y are the same within the limits of experimental accuracy.

statement .....

explanation .....

.....

[2]

(c) The student repeats the experiment using two other lamps. She notices that one lamp is dimly lit, but the other lamp does not light at all.

The p.d. V_T across the lamps is the same as in **(b)**, but the current I_T in the circuit is approximately half of the original value.

View solution

The student concludes that the filament of one of the lamps is broken.

State whether you agree with the student and give a reason for your answer.

statement .....

reason .....

.....

[2]

© UCLES 2018

(d) Draw a circuit diagram to show the circuit in Fig. 2.1 rearranged so that:

View solution

- the lamps are connected in parallel
- a variable resistor is connected to control the total current in the circuit
- the ammeter will measure the total current in the circuit
- the voltmeter will measure the p.d. across the lamps.

[3]

[Total: 11]

© UCLES 2018

3 A student is determining the refractive index *n* of the material of a transparent block.

Fig. 3.1 shows the outline **ABCD** of the block.

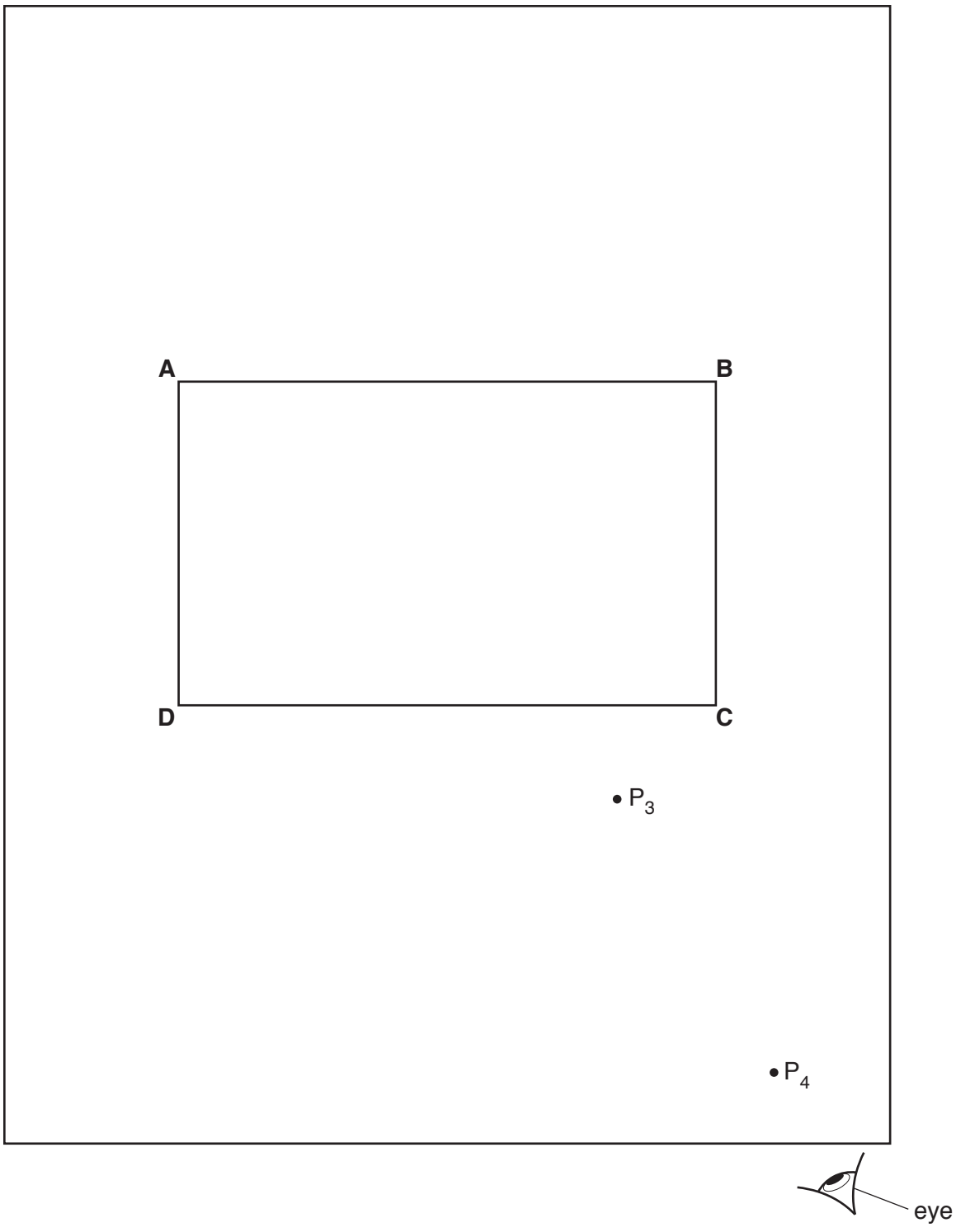

Fig. 3.1

(a) (i) • On Fig. 3.1, draw a normal **NL** at the centre of side **AB**.

• Continue the normal so that it passes through side **CD** of the block.

[1]

View solution

(ii) • Label the point **F** where **NL** crosses **AB**.

• Label the point **G** where **NL** crosses **CD**.

• Draw a line **EF** at an angle $i = 30°$ to the left of the normal and above side **AB**. [1]

(iii) Mark the positions of two pins P_1 and P_2 on line **EF** placed at a suitable distance apart for this type of ray-tracing experiment. [1]

(b) The student observes the images of P_1 and P_2 through side **CD** of the block.

He places two pins P_3 and P_4 between his eye and the block so that P_3, P_4 and the images of P_1 and P_2 seen through the block, all appear exactly one behind the other.

The positions of P_3 and P_4 are marked on Fig. 3.1.

View solution

• Draw a line passing through P_3 and P_4. Continue the line until it meets the normal **NL**.

• Label the point **J** where the line meets the normal.

• Label the point **H** where the line meets side **CD**. Draw the line **FH**. [1]

(c) **(i)** Measure and record the length *a* of the line **FH**.

View solution

a = ... [1]

(ii) Measure and record the length *b* of the line **HJ**.

View solution

b = ... [1]

(iii) Calculate the refractive index *n* using the equation $n = \frac{a}{b}$.

View solution

n = ... [2]

(d) A student states that repeating the experiment improves the reliability of the value obtained for *n*.

Suggest additional values for the angle of incidence *i* that you would use when repeating the experiment to improve the reliability.

.....

.....

..... [2]

(e) State **one** precaution that you would take in this experiment to obtain accurate results.

View solution

.....

..... [1]

[Total: 11]

© UCLES 2018

4 A student is investigating whether the type of container affects the time taken for water to be heated from room temperature to boiling point.

View solution

The following apparatus is available:

250 cm^3 copper can
250 cm^3 aluminium can
250 cm^3 glass beaker
Bunsen burner
measuring cylinder
thermometer
tripod and gauze
stopwatch

Other apparatus normally available in the school laboratory is also available.

Plan an experiment to investigate whether the type of container affects the time taken for water to be heated from room temperature to boiling point.

You should:

- explain briefly how you would carry out the investigation
- state the key variables that you would control
- draw a table, or tables, with column headings to show how you would display your readings (you are **not** required to enter any readings in the table)
- explain briefly how you would use your readings to reach a conclusion.

.....

.....

.....

.....

.....

.....

.....

.....

.....

.....

.....

.....

.....

© UCLES 2018

.....

.....

.....

.....

.....

.....

.....

.....

.....

.....

..... [7]

[Total: 7]

BLANK PAGE

Permission to reproduce items where third-party owned material protected by copyright is included has been sought and cleared where possible. Every reasonable effort has been made by the publisher (UCLES) to trace copyright holders, but if any items requiring clearance have unwittingly been included, the publisher will be pleased to make amends at the earliest possible opportunity.

To avoid the issue of disclosure of answer-related information to candidates, all copyright acknowledgements are reproduced online in the Cambridge International Examinations Copyright Acknowledgements Booklet. This is produced for each series of examinations and is freely available to download at www.cie.org.uk after the live examination series.

Cambridge International Examinations is part of the Cambridge Assessment Group. Cambridge Assessment is the brand name of University of Cambridge Local Examinations Syndicate (UCLES), which is itself a department of the University of Cambridge.

© UCLES 2018