Cambridge IGCSE

Cambridge International Examinations
Cambridge International General Certificate of Secondary Education

CANDIDATE NAME									
CENTRE NUMBER						CANDIDATE NUMBER			

PHYSICS **0625/63**

Paper 6 Alternative to Practical **October/November 2018**

1 hour

Candidates answer on the Question Paper.

No Additional Materials are required.

READ THESE INSTRUCTIONS FIRST

Write your Centre number, candidate number and name on all the work you hand in.
Write in dark blue or black pen.
You may use an HB pencil for any diagrams or graphs.
Do not use staples, paper clips, glue or correction fluid.
DO **NOT** WRITE IN ANY BARCODES.

Answer **all** questions.
Electronic calculators may be used.
You may lose marks if you do not show your working or if you do not use appropriate units.

At the end of the examination, fasten all your work securely together.
The number of marks is given in brackets [ ] at the end of each question or part question.

This syllabus is approved for use in England, Wales and Northern Ireland as a Cambridge International Level 1/Level 2 Certificate.

This document consists of **12** printed pages and **4** blank pages.

© UCLES 2018

CAMBRIDGE International Examinations

1 A student is determining the density of modelling clay.

He is using the block shown in Fig. 1.1 and Fig. 1.2.

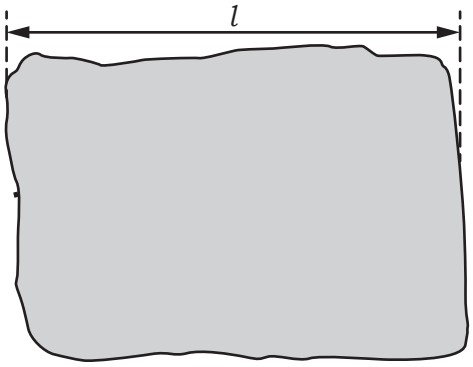

Fig. 1.1

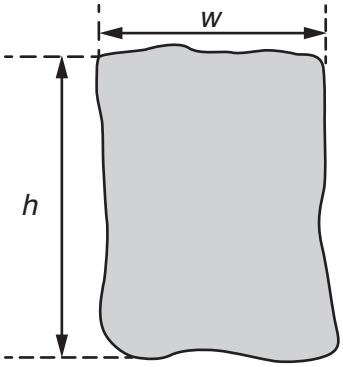

Fig. 1.2 (side view)

View solution

(a) (i) Measure the dimensions of the block of modelling clay, as shown in Fig. 1.1 and Fig. 1.2.

length l = ... cm

width w = ... cm

height h = ... cm

[1]

(ii) Calculate the volume V_1 of the block, using your measurements from **(a)(i)** and the equation $V_1 = l \times w \times h$.

View solution

V_1 = ... cm^3 [1]

(b) Suggest a possible source of inaccuracy in measuring the dimensions of the block and describe an improvement to the procedure that will produce more reliable measurements of the block.

suggestion .....

.....

improvement .....

.....

.....

[2]

View solution

© UCLES 2018

(c) The student suspends the piece of modelling clay from a forcemeter, as shown in Fig. 1.3.

View solution

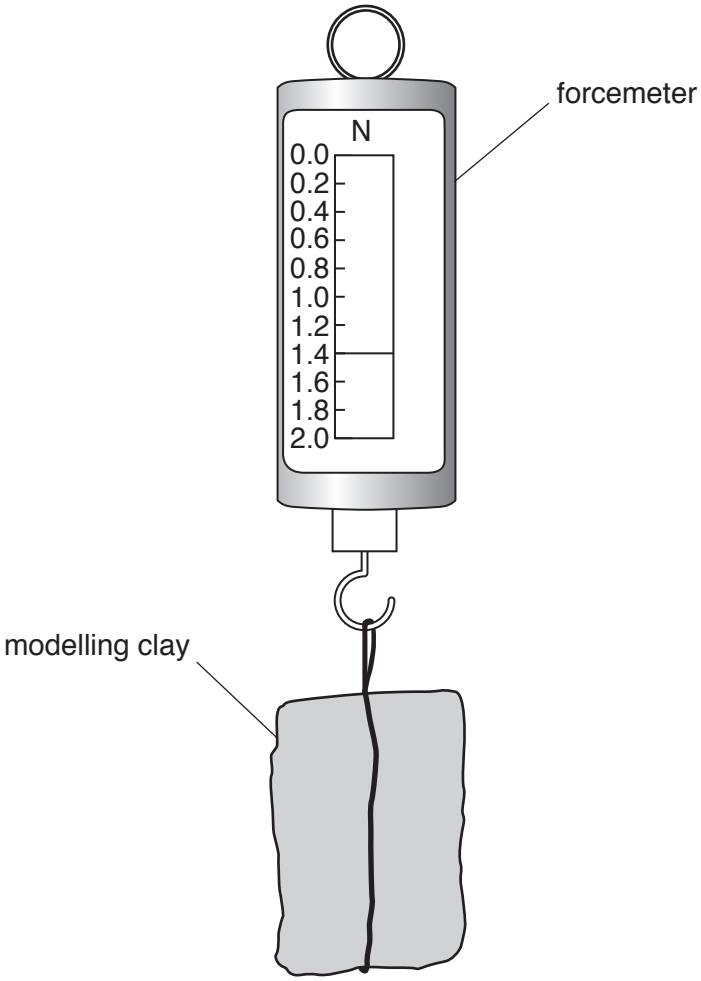

Fig. 1.3

Record the weight W of the block of modelling clay shown in Fig. 1.3.

W = ... N [1]

(d) Calculate a value ρ_1 for the density of the modelling clay, using your results from **(a)(ii)** and **(c)** and the equation

View solution

$$\rho_1 = \frac{W \times k}{V_1},$$

where $k = 100\,\text{g/N}$.

ρ_1 = ... [2]

(e) The student pours some water into a measuring cylinder, as shown in Fig. 1.4.

View solution

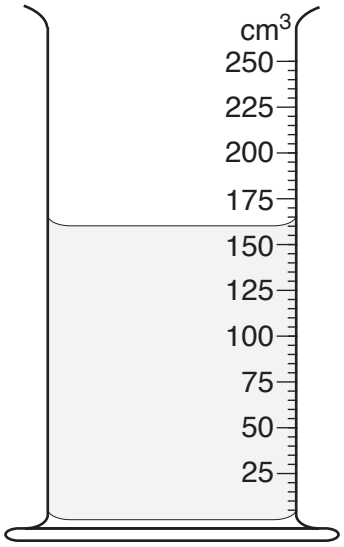

Fig. 1.4

(i) Record the volume V_2 of the water in the measuring cylinder shown in Fig. 1.4.

V_2 = ... cm^3 [1]

(ii) Describe how a measuring cylinder is read to obtain an accurate value for the volume of water. You may draw a diagram to help you.

View solution

.....

.....

..... [1]

© UCLES 2018

(f) The student lowers the modelling clay into the water, as shown in Fig. 1.5.

View solution

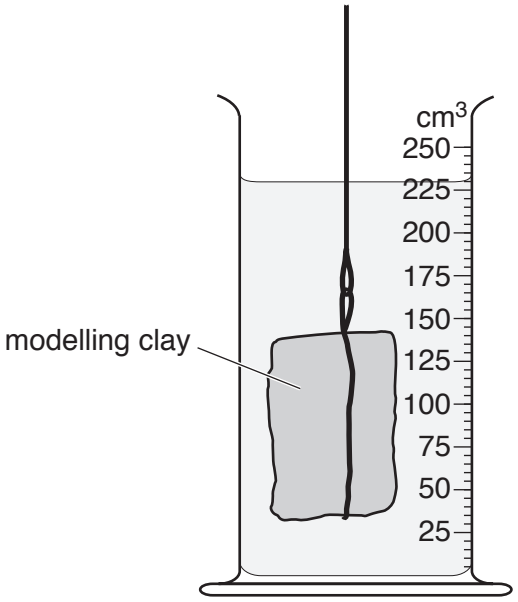

Fig. 1.5

(i) • Record the new reading V_3 of the measuring cylinder in Fig. 1.5, with the block of modelling clay in the water.

V_3 = ... cm^3

• Calculate another value ρ_2 for the density of modelling clay, using your value for V_3, your readings from **(c)** and **(e)(i)** and the equation

$$\rho_2 = \frac{W \times k}{(V_3 - V_2)},$$

where $k = 100\,g/N$.

ρ_2 = ...
[1]

(ii) Suggest which of ρ_1 or ρ_2 is likely to be the more accurate value for the density of the modelling clay.

View solution

Justify your answer by referring to the procedure.

.....

.....

..... [1]

[Total: 11]

2 Some students are determining the resistance per unit length of wire **X**.

They are using the circuit shown in Fig. 2.1.

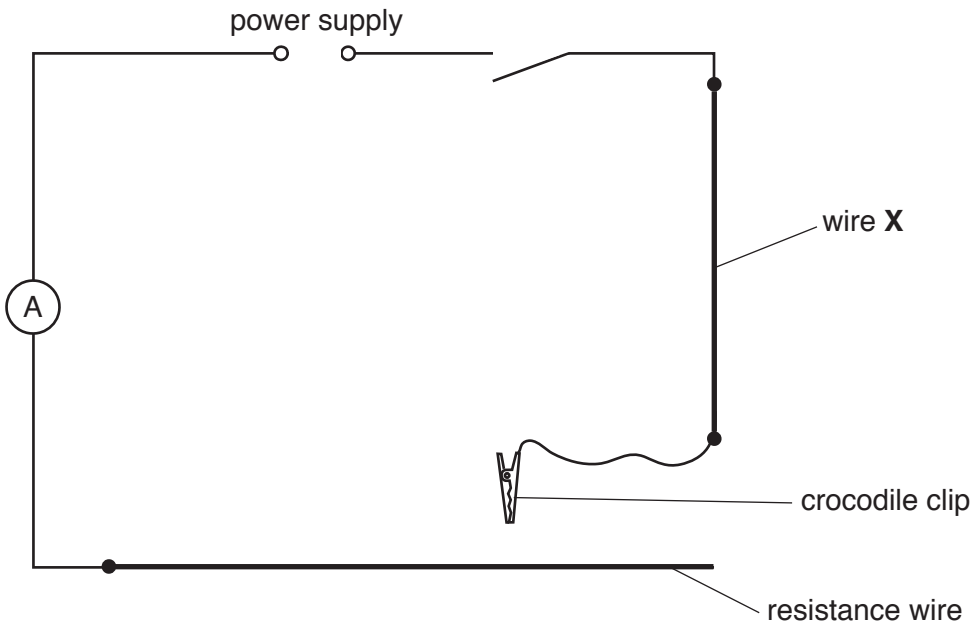

Fig. 2.1

View solution

The crocodile clip is connected to a length of the resistance wire. The current in the circuit and potential difference (p.d.) across wire **X** are measured.

(a) On Fig. 2.1, draw the symbol for a voltmeter correctly connected to measure the p.d. across wire **X**. [1]

(b) A student adjusts the position of the crocodile clip until the current in the circuit is 0.80 A.

View solution

In Table 2.1, record the value of the p.d. *V* across wire **X,** as shown in Fig. 2.2.

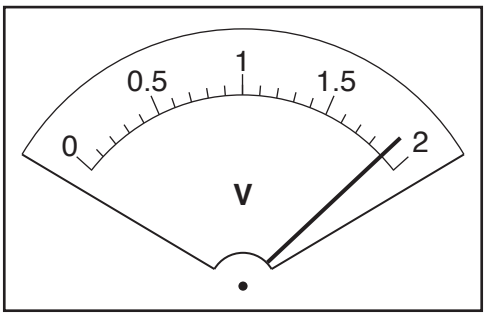

Fig. 2.2

[1]

© UCLES 2018

(c) The student records the p.d. V for different currents, as shown in Table 2.1.

View solution

Table 2.1

I/A	V/V
0.80	
0.70	1.58
0.60	1.34
0.50	1.03
0.40	0.81

(i) Plot a graph of V/V (y-axis) against I/A (x-axis).

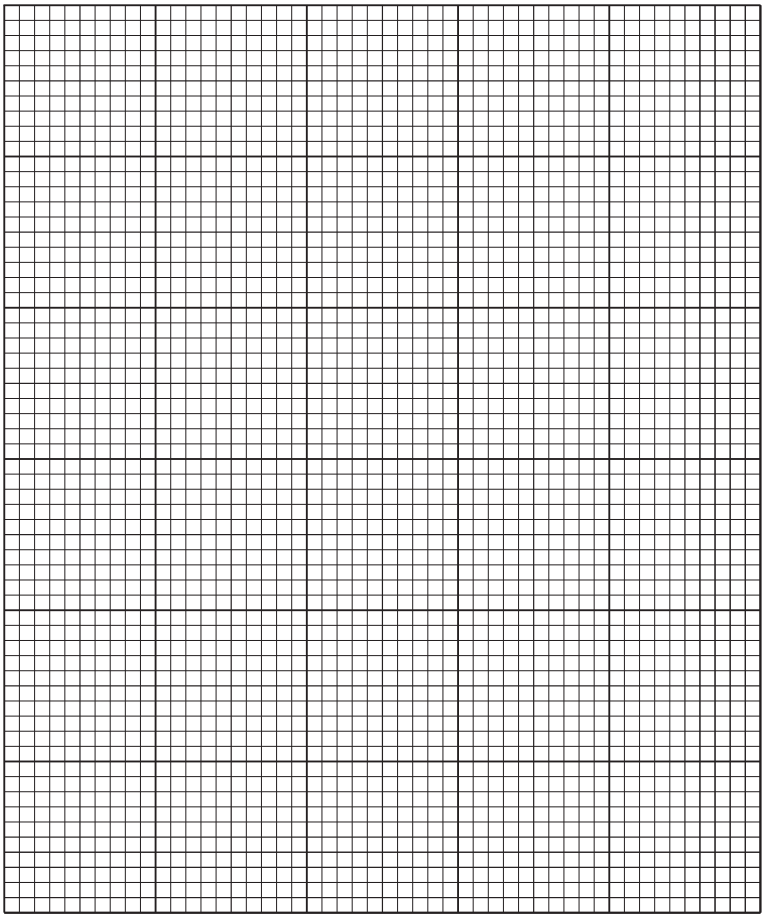

[4]

(ii) Determine the gradient G of the graph. Show clearly on the graph how you obtained the necessary information.

View solution

G = ... [1]

© UCLES 2018

(iii) Fig. 2.3 shows wire **X**.

View solution

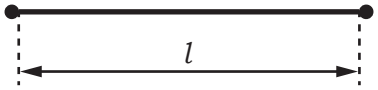

Fig. 2.3

- On Fig. 2.3, measure the length l.

l = ... cm

- The wire in Fig. 2.3 is shown to 1/3rd scale. Calculate the actual length L of wire **X**.

L = ... cm
[1]

(iv) Calculate the resistance R of each centimetre of wire **X**, using the equation

View solution

$$R = \frac{G \times k}{L},$$

where $k = 1.0\,\Omega\,\text{cm}$.

Give the value for R, to a suitable number of significant figures for this experiment.

R = ... [2]

(d) A student notices that the resistance wire becomes very hot when the crocodile clip is connected to short lengths of the wire.

View solution

Suggest an improvement that would help to reduce this effect.

.....

.....

..... [1]

[Total: 11]

© UCLES 2018

BLANK PAGE

3 A student is investigating the reflection of light by a plane mirror.

Her ray-trace sheet is shown in Fig. 3.1.

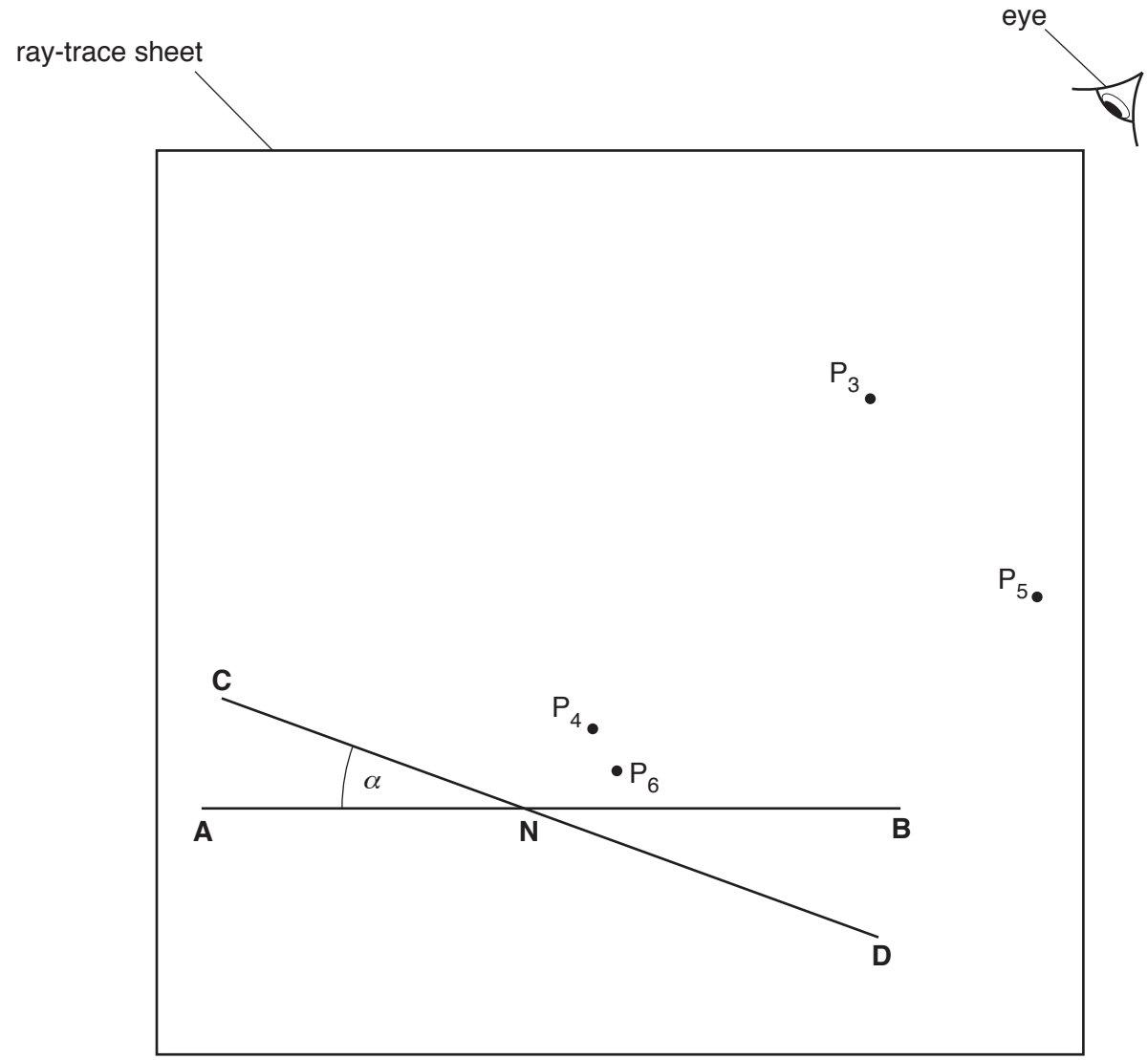

Fig. 3.1

(a) (i) Measure and record in Table 3.1 the angle α between **AN** and **CN,** as shown in Fig. 3.1. [1]

(ii) Draw a normal to **AB** at point **N**, towards the top of the page. Label the top point of this normal **L**. [1]

(iii) Two pins P_1 and P_2 are placed on line **LN,** a suitable distance apart for ray tracing. On Fig. 3.1, label suitable positions for P_1 and P_2. [1]

View solution

© UCLES 2018

(b) The student places the reflecting surface of a plane mirror on line **CD** and views the images of P_1 and P_2 from the direction indicated by the eye in Fig. 3.1.

She places two pins P_3 and P_4 so that the images of P_1 and P_2, and the pins P_3 and P_4, all appear exactly one behind the other.

(i) Draw a line passing through P_3 and P_4 and reaching point **N**. [1]

(ii) Measure the angle θ between this line and the normal **LN**.
Record this value in Table 3.1. [1]

View solution

Table 3.1

	α/°	θ/°
mirror on **CD**		
mirror on **EF**	35	

(c) The student moves the mirror to a line **EF** at an angle $\alpha = 35°$ to **AN**. Line **EF** is not shown in Fig. 3.1.
The student repeats the process with the mirror on **EF** and places pins P_5 and P_6 in line with the new images.

View solution

(i) Draw a line passing through P_5 and P_6 and reaching point **N**. [1]

(ii) Measure the angle θ between this new line and the normal **LN**.
Record this value in Table 3.1. [1]

(d) A student suggests that when the mirror is moved, the **change in** θ should be equal to twice the **change in** α.

State whether your readings support this idea. Justify your answer with reference to the readings.

statement .....

justification .....

.....

.....
[2]

(e) Suggest two precautions that you would take to ensure accurate results from this type of experiment.

1 .....

.....

2 .....

.....
[2]

View solution

[Total: 11]

© UCLES 2018

4 A student is investigating the conduction of thermal energy by metals.

View solution

Plan an experiment to compare the rates at which different metals conduct thermal energy.

The apparatus available includes:

strips of different metals, shaped as shown in Fig. 4.1
a test-tube in a clamp stand
a beaker
a supply of cold water
a supply of hot water.

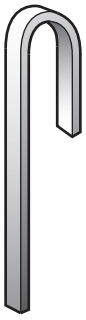

Fig. 4.1

The shorter section of each strip of metal can fit inside a test-tube.

Write a plan for the experiment.

You should:

- list any additional apparatus needed
- draw a labelled diagram of how the apparatus will be arranged
- explain briefly how you will carry out the experiment
- explain how the metals will be compared
- state the precautions which should be taken to obtain reliable results.

© UCLES 2018

.....

.....

.....

BLANK PAGE

© UCLES 2018

BLANK PAGE

© UCLES 2018

BLANK PAGE

Permission to reproduce items where third-party owned material protected by copyright is included has been sought and cleared where possible. Every reasonable effort has been made by the publisher (UCLES) to trace copyright holders, but if any items requiring clearance have unwittingly been included, the publisher will be pleased to make amends at the earliest possible opportunity.

To avoid the issue of disclosure of answer-related information to candidates, all copyright acknowledgements are reproduced online in the Cambridge International Examinations Copyright Acknowledgements Booklet. This is produced for each series of examinations and is freely available to download at www.cie.org.uk after the live examination series.

Cambridge International Examinations is part of the Cambridge Assessment Group. Cambridge Assessment is the brand name of University of Cambridge Local Examinations Syndicate (UCLES), which is itself a department of the University of Cambridge.

© UCLES 2018