Cambridge IGCSE

Cambridge Assessment International Education
Cambridge International General Certificate of Secondary Education

CANDIDATE NAME									
CENTRE NUMBER						CANDIDATE NUMBER				

PHYSICS **0625/33**

Paper 3 Theory (Core) **October/November 2019**

1 hour 15 minutes

Candidates answer on the Question Paper.

No Additional Materials are required.

READ THESE INSTRUCTIONS FIRST

Write your centre number, candidate number and name on all the work you hand in.
Write in dark blue or black pen.
You may use an HB pencil for any diagrams or graphs.
Do not use staples, paper clips, glue or correction fluid.
DO **NOT** WRITE IN ANY BARCODES.

Answer **all** questions.
Electronic calculators may be used.
You may lose marks if you do not show your working or if you do not use appropriate units.
Take the weight of 1.0 kg to be 10 N (acceleration of free fall = 10 m/s^2).

At the end of the examination, fasten all your work securely together.
The number of marks is given in brackets [ ] at the end of each question or part question.

This syllabus is regulated for use in England, Wales and Northern Ireland as a Cambridge International Level 1/Level 2 Certificate.

© UCLES 2019

1 **(a)** A student uses a stopwatch in a timing experiment.

View solution

Fig. 1.1 shows the stopwatch readings.

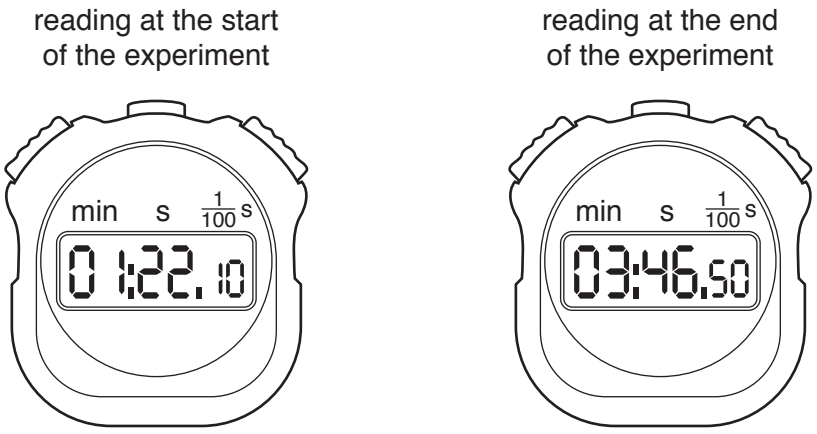

Fig. 1.1

Calculate the time interval between the two readings.

time interval = ... s [2]

(b) A device has a light-emitting diode (LED) that flashes briefly at regular intervals.

Describe how to determine accurately the average time for each interval, using a stopwatch.

.....

.....

.....

.....

.....

..... [4]

[Total: 6]

View solution

2 A student reviews some data about athletes and footballers.

(a) An athlete runs 12 km in 1.5 hours.

Calculate the athlete's average speed in km / h.

View solution

average speed = ... km / h [3]

(b) Fig. 2.1 shows the speed-time graph for a footballer for the first 15.0 seconds of a game.

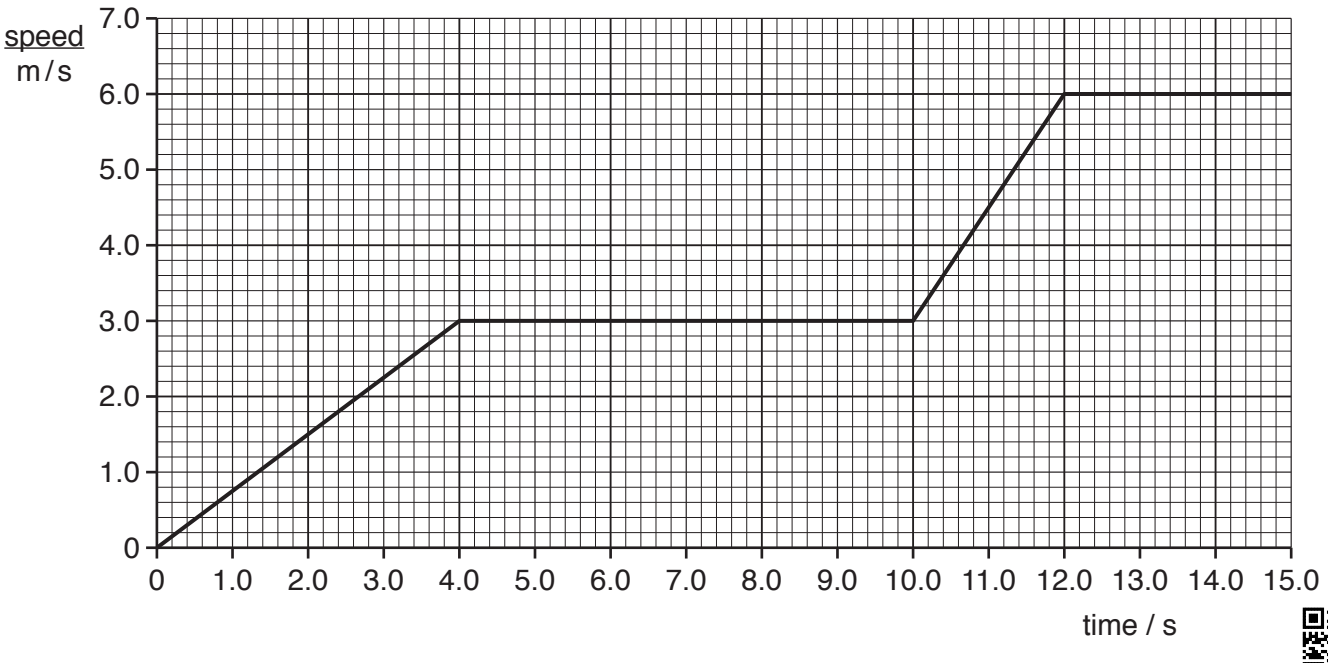

View solution

Fig. 2.1

(i) Use the graph in Fig. 2.1 to calculate the distance travelled by the footballer during the first 4.0 seconds.

distance = ... m [3]

(ii) Use the graph in Fig. 2.1 to determine when the footballer is moving with greatest acceleration.

View solution

Between ..... s and ..... s

Give a reason for your answer.

.....

.....

[2]

(c) Another footballer has a mass of 72 kg.

Calculate the weight of this footballer.

View solution

weight = ... N [3]

[Total: 11]

3 A model aircraft is flying through air. Fig. 3.1 shows the forces acting on the model aircraft. The weight of the model aircraft is 15.0 N.

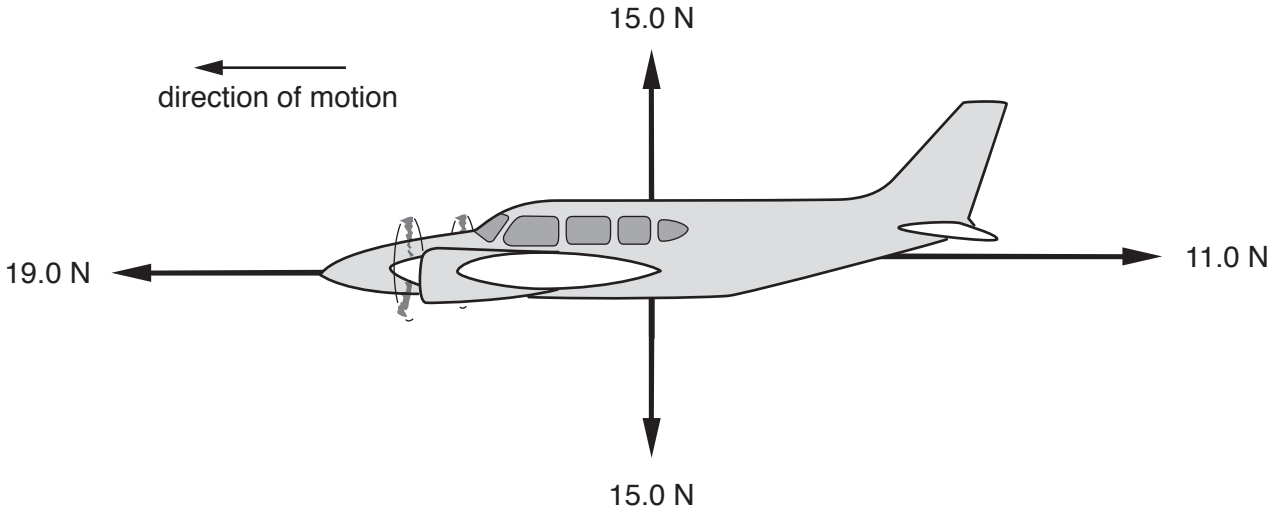

Fig. 3.1

(a) **(i)** Determine the size and direction of the resultant **horizontal** force acting on the model aircraft.

View solution

size of resultant horizontal force = ... N

direction of resultant horizontal force = ...

[1]

(ii) Describe the change in the motion of the model aircraft.

View solution

.....

..... [2]

(b) The horizontal forces acting on the model aircraft become balanced.

View solution

Suggest how the horizontal forces acting on the model aircraft have changed.

.....

..... [1]

[Total: 4]

© UCLES 2019

4 **(a)** A man is working on a platform. He uses a rope to raise a bag from the ground to the platform as shown in Fig. 4.1.

View solution

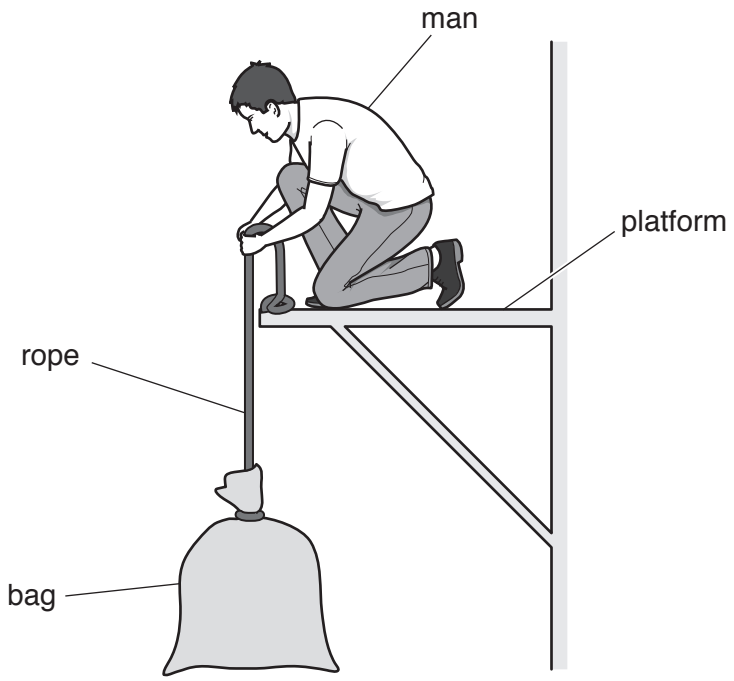

Fig. 4.1

(i) State the type of energy gained by the bag as it is lifted at constant speed.

..... [1]

(ii) The man then lifts a second bag from the ground to the platform. The first bag weighs 100 N and the second bag weighs 150 N.

View solution

On which bag of materials does the man do more work?

.....

Explain your answer.

.....

.....

[1]

(iii) The man wants to determine his useful power as he lifts one of the bags. He knows the weight of the bag. State the **two** other quantities he needs to know.

1 .....

2 .....

[2]

View solution

(b) The statements describe processes in a coal-fired power station. They are **not** in the correct order.

View solution

A Thermal energy boils water.

B Coal burns to produce thermal (heat) energy.

C Electricity is transmitted to a step-up transformer.

D A turbine turns coils in a magnetic field.

E Steam turns a turbine.

Use the letters A, B, C, D and E to complete the flow chart explaining how the power station works.

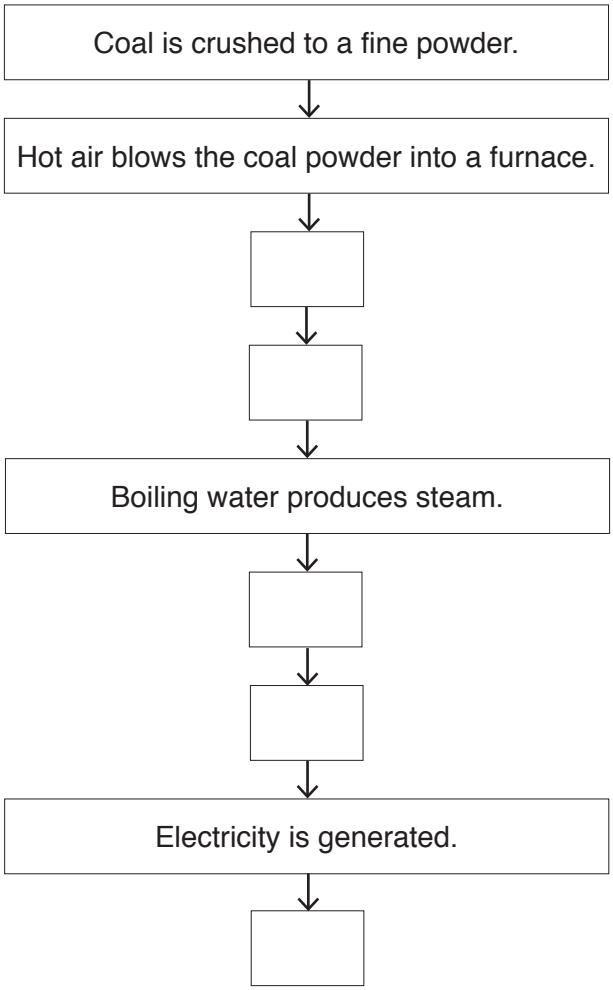

[3]

[Total: 7]

5 **(a)** The arrows on Fig. 5.1 represent changes of state.

View solution

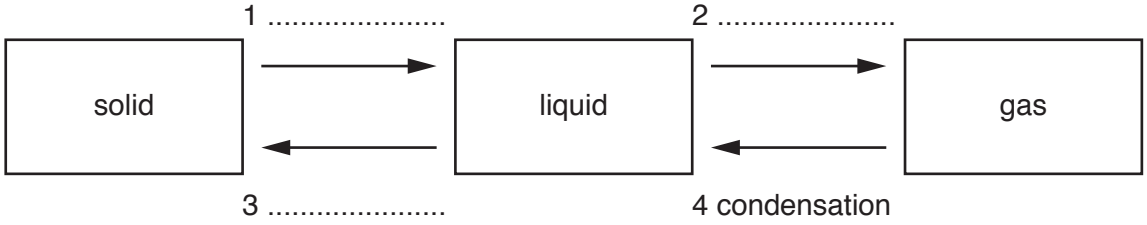

Fig. 5.1

One of the arrows is labelled. Label each of the other arrows with the correct change of state. Write the change of state on the dotted lines next to each arrow. [3]

(b) A beaker contains some liquid with a low boiling point. The beaker is placed onto a small amount of water, as shown in Fig. 5.2.

View solution

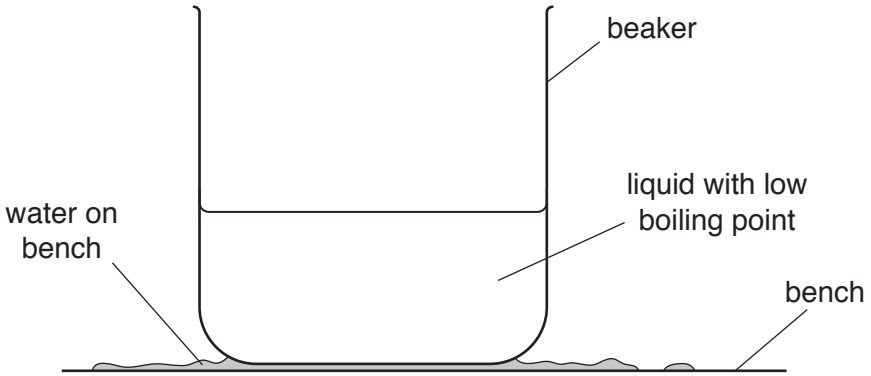

Fig. 5.2

The liquid in the beaker evaporates quickly. The water on the bench cools and turns to ice.

Explain why the water cools.

.....

.....

.....

.....

..... [3]

[Total: 6]

6 **(a)** Fig. 6.1 represents a transverse wave drawn full size. Point X represents a point on the wave.

View solution

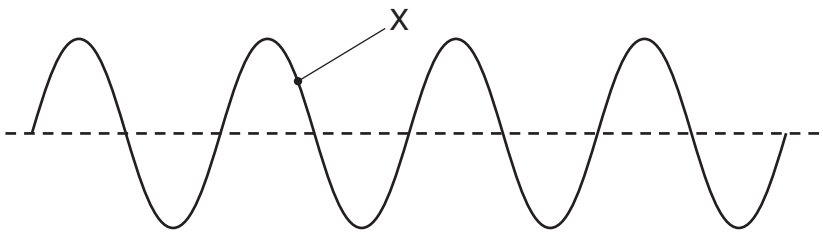

Fig. 6.1

(i) On Fig. 6.1, mark clearly the directions in which point X moves. [1]

(ii) Use Fig. 6.1 to measure the wavelength of the wave.

wavelength = ... cm [1]

(iii) The frequency of the wave is increased. Describe how the wave pattern in Fig. 6.1 would be different.

.....

..... [1]

(b) **(i)** Place a tick in a box next to any transverse wave.

View solution

☐ light

☐ sound

☐ radio [1]

(ii) State a type of wave that **cannot** travel in a vacuum.

..... [1]

[Total: 5]

View solution

7 **(a)** Complete the sentences. Add the missing word to each of the blank spaces.

View solution

The unit of temperature is called the ..... .

The physical property that varies with temperature in a liquid-in-glass thermometer is the ..... of the liquid.

[2]

(b) A student has a thermometer without a marked scale.
To produce a scale for the thermometer, the student must use two fixed points.
Give the temperature value for each fixed point and describe what happens to water at each of these temperatures.

Lower fixed point .....

.....

Upper fixed point .....

.....

[4]

[Total: 6]

View solution

8 Fig. 8.1 shows a ray of light travelling through a glass block and then reflecting from a mirror.

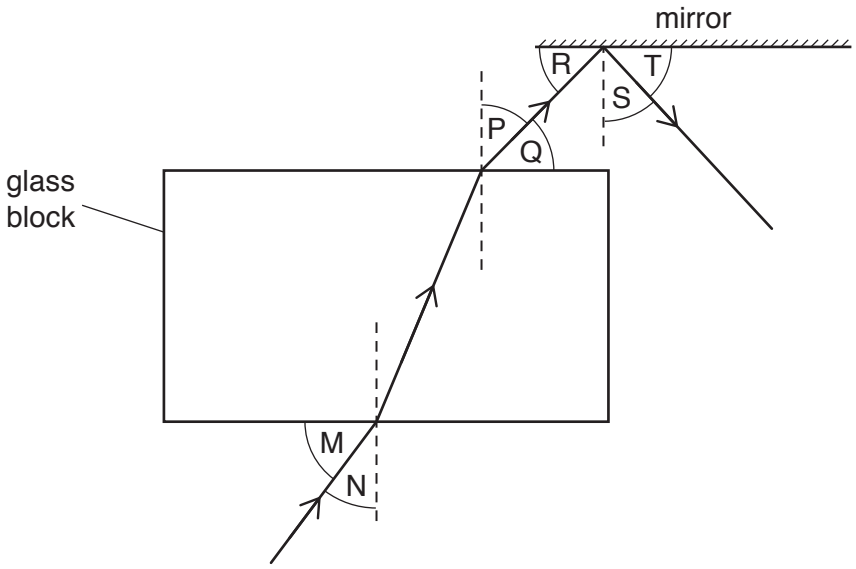

Fig. 8.1

(a) State the term used for the dashed lines drawn in Fig. 8.1.

View solution

..... [1]

(b) Use Fig. 8.1 to identify the three angles in the list. Place the correct letter in the box to indicate each angle.

View solution

☐ angle of incidence

☐ angle of reflection

☐ angle of refraction [3]

(c) The ray of light in Fig. 8.1 changes direction as it enters the glass block. State the name of this effect and explain why it happens.

name of effect .....

explanation .....

.....

.....

[2]

[Total: 6]

View solution

9 Two bar magnets are placed next to each other as shown in Fig. 9.1.



Fig. 9.1

Magnet A is slowly moved towards magnet B. This causes magnet B to move away from magnet A.

(a) (i) On Fig. 9.1, suggest the poles of each bar magnet.

Label N and S on each of the magnets. [1]

(ii) State the term used to describe the direction of the forces acting between magnet A and magnet B.

..... [1]

(iii) Magnet B is removed and replaced with a steel bar of the same size.

View solution

Describe what happens when magnet A is slowly moved towards the steel bar.

.....

..... [1]

(b) A student makes an electromagnet. He places an iron rod inside a coil of wire and connects the coil to a d.c. power supply, as shown in Fig. 9.2.

View solution

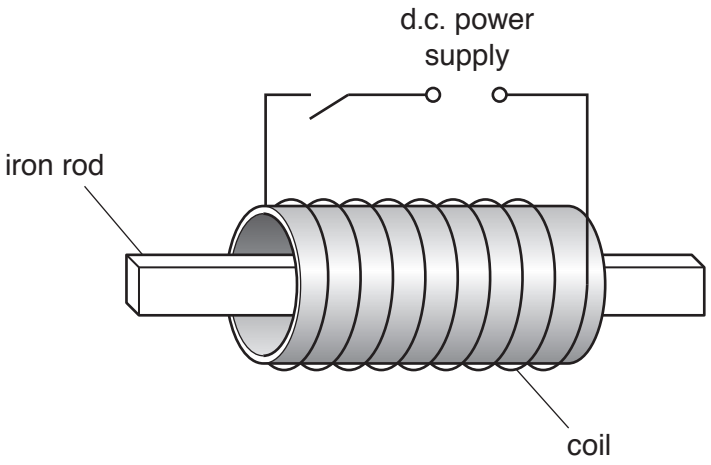

Fig. 9.2

(i) The switch is closed so there is a current in the coil. The S pole of a bar magnet is placed near to each end of the iron rod in turn.
Suggest what happens at each end of the iron rod and give a reason for your predictions.

Suggestions .....

.....

.....

reason .....

.....

[2]

(ii) The student removes the iron rod from the coil. The student places a steel rod inside the coil. He closes the switch and the steel rod becomes a magnet. He then opens the switch.

View solution

The student removes the steel rod and moves it close to the iron rod.

Describe and explain what happens as the two rods are moved close together.

.....

.....

..... [2]

(iii) State **one** use for an electromagnet.

View solution

..... [1]

[Total: 8]

© UCLES 2019

10 Fig. 10.1 shows the symbol for an electrical component.

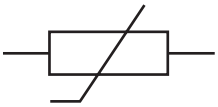

Fig. 10.1

(a) State the name of the component shown in Fig. 10.1.

View solution

..... [1]

(b) The resistance of the component shown in Fig. 10.1 varies with temperature. Fig. 10.2 shows a graph of resistance against temperature for the component.

View solution

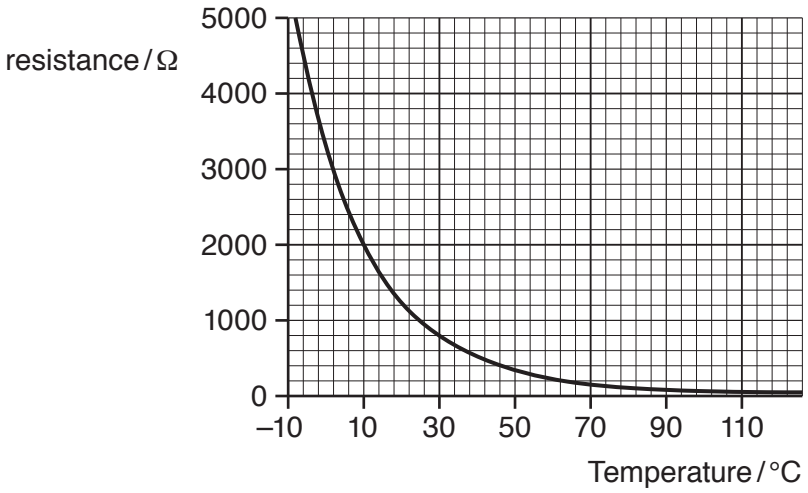

Fig. 10.2

(i) Use Fig. 10.2 to determine the resistance of the component at a temperature of 10 °C.

..... Ω [1]

(ii) At another temperature, the resistance of the component is 800 Ω.
Calculate the current in the component when it is connected to a 12.0 V supply.

View solution

current = ...A [3]

[Total: 5]

11 Fig. 11.1 shows a diagram of an electrical device. The diagram is **not** complete. The coil rotates in a magnetic field when connected to a d.c. power supply.

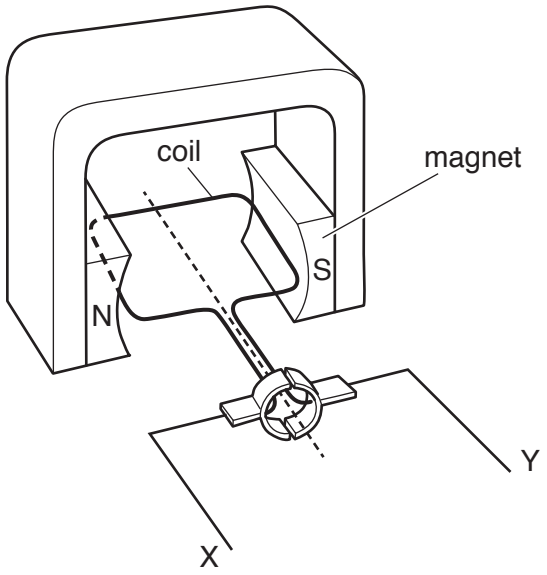

Fig. 11.1

(a) (i) Explain the meaning of the term *d.c.*

View solution

.....

..... [1]

(ii) Complete the diagram in Fig. 11.1 by drawing the symbols for two cells in series **and** a switch to make a circuit. [2]

(b) (i) State the name of the electrical device shown in Fig. 11.1.

View solution

..... [1]

(ii) State **two** changes to the electrical device that will make the coil in the device rotate faster.

1. .....

2. .....

[2]

[Total: 6]

View solution

© UCLES 2019

12 Fig. 12.1 shows the nuclide notation for three isotopes of an element.

$$\begin{matrix}{}^{1}_{1}\mathbf{X} & {}^{2}_{1}\mathbf{Y} & {}^{3}_{1}\mathbf{Z}\end{matrix}$$

Fig. 12.1

(a) (i) Describe how the nuclide notation shows that each isotope is of the same element.

View solution

.....

..... [1]

(ii) Describe how the nuclide notation shows the differences between the isotopes.

View solution

.....

..... [1]

(b) Radioactive sources emit radiation when they decay. State the names of **three** types of radioactive emission.

1 .....

2 .....

3 .....

[2]

(c) Radioactive emissions have differing characteristics. One characteristic is their ionising effect.

Complete the statement about ionisation, using words from the box. The words can be used once, more than once or not at all.

electrons	**negatively**	**neutrons**	**positively**	**neutrally**	**protons**

View solution

When atoms are ionised,

..... may be removed, leaving ..... charged atoms (ions), or

..... may be gained, forming ..... charged atoms (ions). [4]

(d) Polonium-210 has a half-life of 140 days. A sample of polonium-210 has 8.0×10^{10} atoms. Calculate the number of polonium-210 atoms remaining in the sample after 280 days.

View solution

number of atoms = ... [2]

[Total: 10]

© UCLES 2019

BLANK PAGE

Permission to reproduce items where third-party owned material protected by copyright is included has been sought and cleared where possible. Every reasonable effort has been made by the publisher (UCLES) to trace copyright holders, but if any items requiring clearance have unwittingly been included, the publisher will be pleased to make amends at the earliest possible opportunity.

To avoid the issue of disclosure of answer-related information to candidates, all copyright acknowledgements are reproduced online in the Cambridge Assessment International Education Copyright Acknowledgements Booklet. This is produced for each series of examinations and is freely available to download at www.cambridgeinternational.org after the live examination series.

Cambridge Assessment International Education is part of the Cambridge Assessment Group. Cambridge Assessment is the brand name of the University of Cambridge Local Examinations Syndicate (UCLES), which itself is a department of the University of Cambridge.

© UCLES 2019