Cambridge IGCSE

Cambridge Assessment International Education
Cambridge International General Certificate of Secondary Education

CANDIDATE NAME									
CENTRE NUMBER						CANDIDATE NUMBER				

PHYSICS **0625/42**

Paper 4 Theory (Extended) **October/November 2019**

1 hour 15 minutes

Candidates answer on the Question Paper.

No Additional Materials are required.

READ THESE INSTRUCTIONS FIRST

Write your centre number, candidate number and name on all the work you hand in.
Write in dark blue or black pen.
You may use an HB pencil for any diagrams or graphs.
Do not use staples, paper clips, glue or correction fluid.
DO **NOT** WRITE IN ANY BARCODES.

Answer **all** questions.
Electronic calculators may be used.
You may lose marks if you do not show your working or if you do not use appropriate units.
Take the weight of 1.0 kg to be 10 N (acceleration of free fall = 10 m/s^2).

At the end of the examination, fasten all your work securely together.
The number of marks is given in brackets [ ] at the end of each question or part question.

This syllabus is regulated for use in England, Wales and Northern Ireland as a Cambridge International Level 1/Level 2 Certificate.

This document consists of **14** printed pages and **2** blank pages.

© UCLES 2019

1 Fig. 1.1 is the top view of a rectangular paddling pool of constant depth. The pool is filled with sea water.

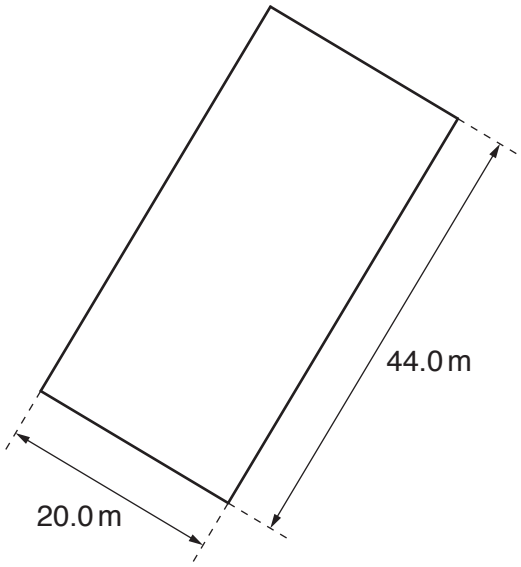

Fig. 1.1 (not to scale)

View solution

(a) The volume of the sea water in the pool is 264 m^3.

Calculate the depth of the pool.

depth = ... [3]

(b) The mass of the sea water in the pool is 2.70×10^5 kg.
Calculate the density of the sea water. Give your answer to 3 significant figures.

View solution

density = ... [2]

(c) Calculate the pressure due to the sea water at the bottom of the pool.

View solution

pressure = ... [2]

(d) State a suitable instrument for measuring the dimensions given in Fig. 1.1.

..... [1]

[Total: 8]

View solution

2 **(a)** State the **two** conditions which must be true for an object to be in equilibrium.

View solution

condition 1 .....

condition 2 .....

[2]

(b) Fig. 2.1 shows a uniform metre rule PQ in equilibrium.

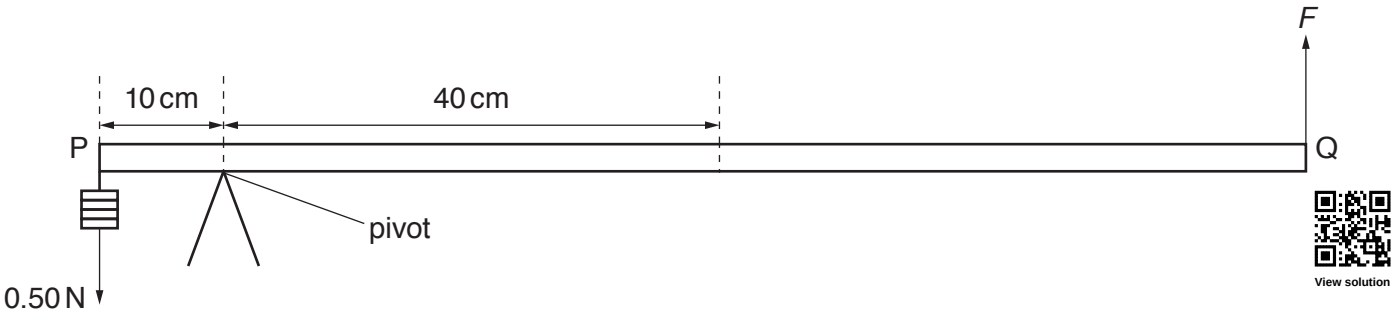

View solution

Fig. 2.1

The distance PQ is 100 cm. The mass of the metre rule is 0.12 kg and its weight is *W*.

(i) On Fig 2.1, draw and label:

1. an arrow to show the force *W* acting on PQ at the centre of mass

2. an arrow to show the force *R* acting on PQ at the pivot.

[2]

(ii) By taking moments about the pivot, calculate *F*.

View solution

F = ... [4]

(iii) Calculate *R*.

View solution

R = ... [2]

[Total: 10]

© UCLES 2019

3 Fig. 3.1 shows a gas contained in a cylinder enclosed by a piston.

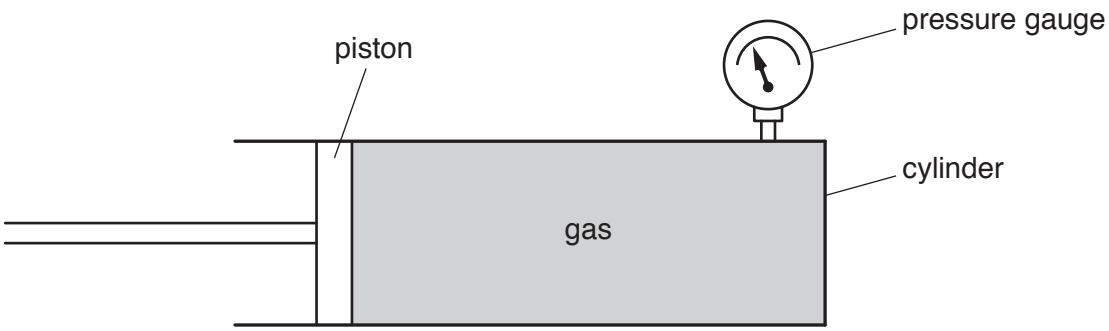

Fig. 3.1

View solution

(a) Describe, in terms of momentum of the molecules, how a pressure is exerted on the walls of the cylinder.

.....

.....

.....

.....

..... [3]

(b) The piston is pushed into the cylinder. The volume decreases from 820 cm^3 to 330 cm^3 . The pressure gauge measures the pressure after compression as 20 000 Pa. The temperature remains constant.

View solution

Calculate the value of the pressure before the gas was compressed.

pressure = ... [3]

[Total: 6]

4 **(a)** A student carries out an experiment to determine the thermal capacity of a metal block. The block is heated by an electric heater for 23 minutes. The current in the heater is 3.0 A at a potential difference (p.d.) of 12 V.
The temperature of the block rises from 20 °C to 70 °C.

View solution

Calculate the thermal capacity of the block.

thermal capacity = ... [4]

(b) **1.** Two metal spheres of different diameters are heated to 900 °C in a hot oven. The two spheres are removed from the oven.

State and explain any difference in the initial rates of emission of radiation of thermal energy between the two spheres.

.....

.....

.....

2. One hot sphere is now heated in a hotter oven.

State and explain any effect on the rate of emission of radiation of thermal energy from that sphere when it is removed from the hotter oven.

.....

.....
[3]

[Total: 7]

View solution

© UCLES 2019

5 **(a)** One difference between a longitudinal wave and a transverse wave is that a longitudinal wave consists of compressions and rarefactions.

View solution

(i) Explain the terms compression and rarefaction using ideas about particles.

compression .....

.....

.....

rarefaction .....

.....

.....

[2]

(ii) Describe **one** other way in which longitudinal wave motion differs from transverse wave motion.

Longitudinal wave motion .....

.....

.....

Transverse wave motion .....

.....

.....

[2]

(b) **(i)** A sound wave of frequency 0.120 kHz travels through a rock at a speed of 3500 m / s.

View solution

Calculate the wavelength of the wave.

wavelength = ... [3]

(ii) The wave travels from the rock into the air.

View solution

State and explain whether the wave will be audible to a healthy human ear.

statement .....

explanation .....

.....

[2]

[Total: 9]

6 **(a)** Fig. 6.1 shows an empty container and an observer's eye. There is a small coin at position O. The observer is unable to see the coin.

View solution

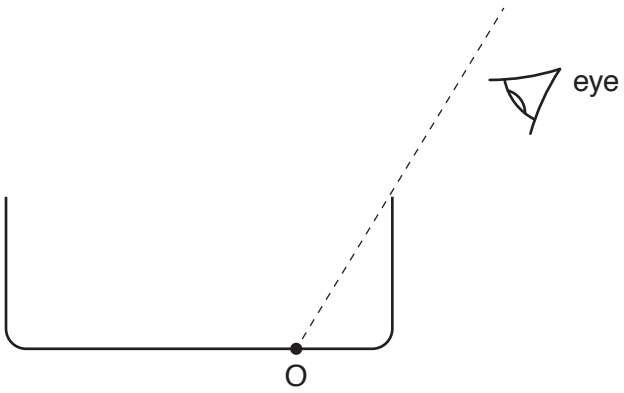

Fig. 6.1

The observer and the coin stay in the same position and the container is filled with water. The observer can now see the coin.

(i) Explain why the coin can be seen by the observer.

.....

..... [2]

(ii) State the name of the wave process which occurs as the light passes from the water into the air.

..... [1]

(iii) Explain why the image of the coin is a virtual image.

..... [1]

(b) State the speed of light in air.

View solution

..... [1]

(c) The refractive index of water is 1.3.

View solution

Calculate the speed of light in water.

speed of light in water = ... [3]

[Total: 8]

© UCLES 2019

7 **(a)** Fig. 7.1 shows a coil of wire wound on a thin plastic cylinder. The plastic has no effect on any magnetic field. The galvanometer is extremely sensitive.

View solution

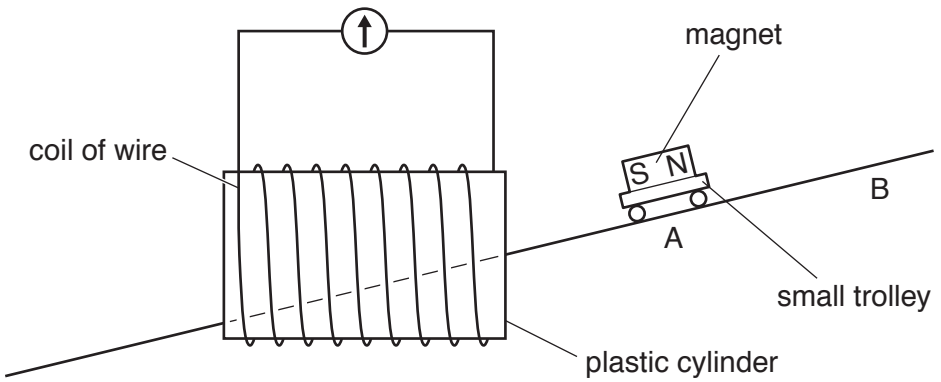

Fig. 7.1

A magnet is fixed to a small trolley that runs without friction on a track through the cylinder and coil.

(i) The trolley is released from point A so it runs through the coil from right to left.

State and explain what is observed on the galvanometer.

.....

.....

..... [2]

(ii) The trolley is now released from point B so it runs through the coil from right to left again.

State what is observed on the galvanometer and explain why it is different to your answer in **(a)(i)**.

.....

.....

..... [2]

View solution

(b) Fig. 7.2 shows an extension lead used to supply power to a 3 kW electric heater on a cool evening.

View solution

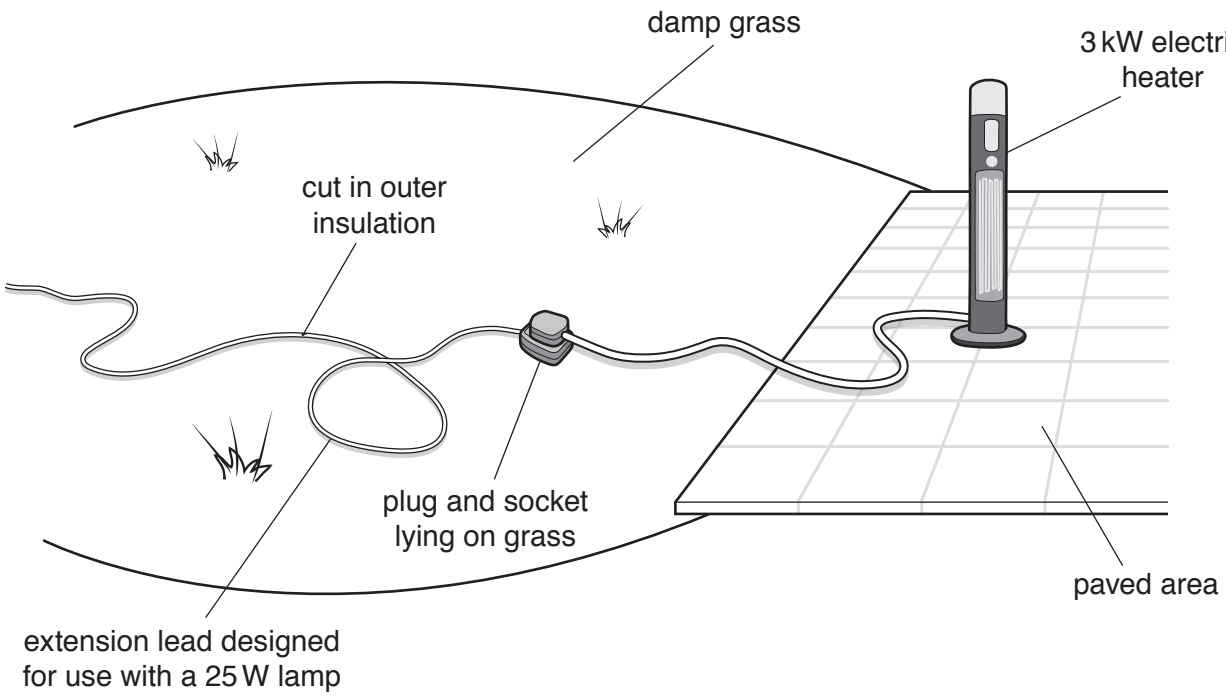

Fig. 7.2

State and explain three dangers with this arrangement.

danger 1 .....

.....

.....

danger 2 .....

.....

.....

danger 3 .....

.....

.....

[4]

[Total: 8]

8 **(a)** A wire of length 2.0 m and cross-sectional area 0.40 mm^2 has a resistance of 0.14 Ω.

Calculate the resistance of another wire of the same material of length 3.0 m and cross-sectional area 0.90 mm^2.

View solution

resistance = ... Ω [4]

(b) A student is designing a digital electronic circuit. Fig. 8.1 shows her partly completed design.

View solution

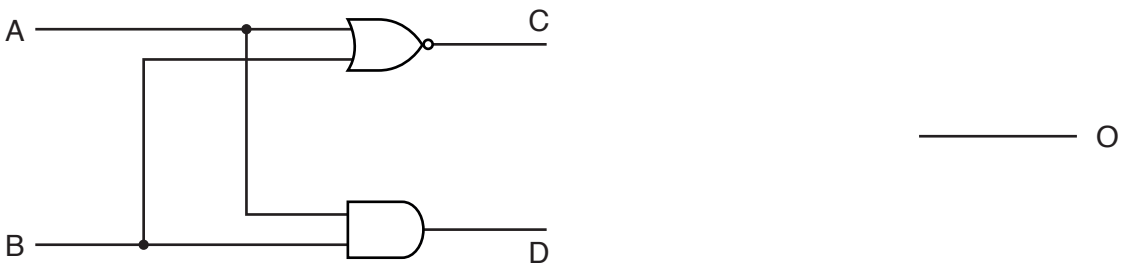

Fig. 8.1

(i) Table 8.1 is a truth table.
Complete the columns in this truth table to show the values for input B in the circuit.

Table 8.1

Input A	Input B	Point C	Point D	Output O
1		0	0	1
0		0	0	1
1		0	1	0
0		1	0	0

[2]

(ii) The column O in the truth table shows the desired output values for the circuit.

On Fig. 8.1, complete the circuit to achieve these output values. Label any gate used. [2]

[Total: 8]

View solution

9 **(a)** Describe what is meant by the term *electric field*.

View solution

.....

..... [1]

(b) Fig. 9.1 shows two parallel conducting plates connected to a battery.

View solution

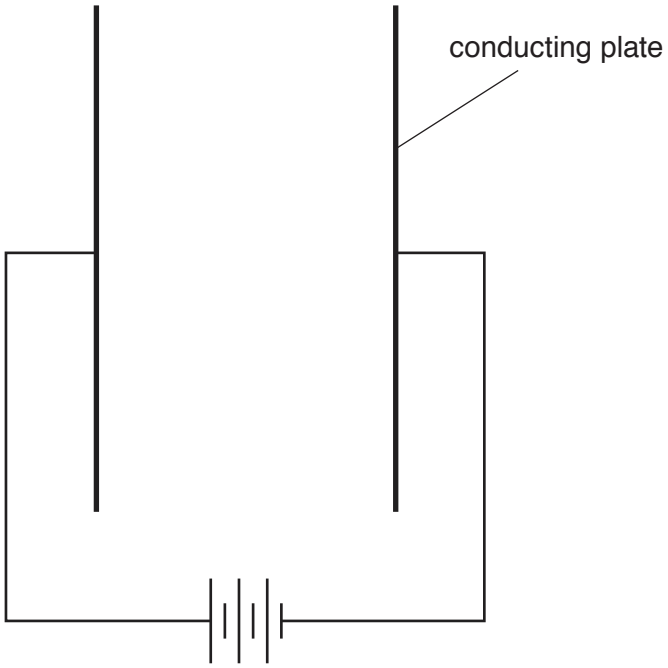

Fig. 9.1

On Fig. 9.1, draw **five** lines to show the electric field pattern between the two plates. [2]

© UCLES 2019

(c) When fully charged, a 1.2 V rechargeable battery can deliver a current of 210 mA for 10 hours.

(i) Calculate the charge that can be delivered by the fully charged battery.

View solution

charge = ... [3]

(ii) Calculate the energy stored in the battery when fully charged.

View solution

energy stored = ... [2]

(iii) State the type of energy stored when the battery is charged.

..... [1]

[Total: 9]

View solution

10 (a) The nucleus of a hydrogen atom is a proton. The mass of a proton is *m* and the size of the charge on a proton is *e*.
Complete Table 10.1. Express your answers in terms of *m* and *e*. Three spaces have already been completed.

View solution

Table 10.1

particle or emission	mass	charge
proton	*m*	*e*
neutron	*m*	
γ-ray		
nucleus of helium-4 ($^4_2$He)		

[4]

(b) Many schools and colleges use radioactive isotopes for teaching and research. Describe how these radioactive isotopes are handled, used and stored in a safe way.

.....

.....

.....

.....

.....

..... [3]

[Total: 7]

View solution

© UCLES 2019

BLANK PAGE

© UCLES 2019

BLANK PAGE

Permission to reproduce items where third-party owned material protected by copyright is included has been sought and cleared where possible. Every reasonable effort has been made by the publisher (UCLES) to trace copyright holders, but if any items requiring clearance have unwittingly been included, the publisher will be pleased to make amends at the earliest possible opportunity.

To avoid the issue of disclosure of answer-related information to candidates, all copyright acknowledgements are reproduced online in the Cambridge Assessment International Education Copyright Acknowledgements Booklet. This is produced for each series of examinations and is freely available to download at www.cambridgeinternational.org after the live examination series.

Cambridge Assessment International Education is part of the Cambridge Assessment Group. Cambridge Assessment is the brand name of the University of Cambridge Local Examinations Syndicate (UCLES), which itself is a department of the University of Cambridge.

© UCLES 2019