Cambridge IGCSE

Cambridge Assessment International Education
Cambridge International General Certificate of Secondary Education

CANDIDATE NAME									
CENTRE NUMBER						CANDIDATE NUMBER				

PHYSICS **0625/51**

Paper 5 Practical Test **October/November 2019**

1 hour 15 minutes

Candidates answer on the Question Paper.

Additional Materials: As listed in the Confidential Instructions.

READ THESE INSTRUCTIONS FIRST

Write your centre number, candidate number and name in the spaces at the top of the page.
Write in dark blue or black pen.
You may use an HB pencil for any diagrams or graphs.
Do not use staples, paper clips, glue or correction fluid.
DO **NOT** WRITE IN ANY BARCODES.

Answer **all** questions.
You are advised to spend about 20 minutes on each of questions 1 to 3, and 15 minutes on question 4.
Electronic calculators may be used.
You may lose marks if you do not show your working or if you do not use appropriate units.

At the end of the examination, fasten all your work securely together.
The number of marks is given in brackets [ ] at the end of each question or part question.

For Examiner's Use	
1	
2	
3	
4	
Total	

This syllabus is regulated for use in England, Wales and Northern Ireland as a Cambridge International Level 1/Level 2 Certificate.

This document consists of **10** printed pages and **2** blank pages.

© UCLES 2019

1 In this experiment, you will determine the weight of a metre rule using a balancing method.

Carry out the following instructions, referring to Fig. 1.1.

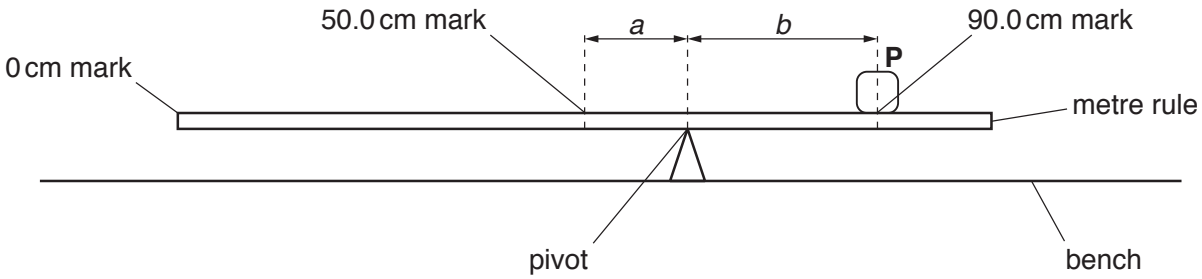

Fig. 1.1

(a) • Place the metre rule on the pivot. Place the load **P**, labelled **1.5 N**, on the metre rule at the 90.0 cm mark. Keep **P** at the 90.0 cm mark and adjust the position of the metre rule on the pivot so that the metre rule is as near as possible to being balanced.

View solution

- In Table 1.1, record the distance *a* from the 50.0 cm mark to the pivot.
- In Table 1.1, record the distance *b* from the 90.0 cm mark to the pivot.
- Calculate $\frac{a}{b}$. Record its value in Table 1.1.
- Repeat the procedure using the loads labelled **1.2 N**, **1.0 N**, **0.8 N** and **0.5 N**.

Table 1.1

Weight of load **P** / N	*a* / cm	*b* / cm	$\frac{a}{b}$
1.5			
1.2			
1.0			
0.8			
0.5			

[3]

© UCLES 2019

(b) Plot a graph of Weight of Load **P** / N (y-axis) against $\frac{a}{b}$ (x-axis). You do **not** need to begin your axes at the origin, (0,0).

View solution

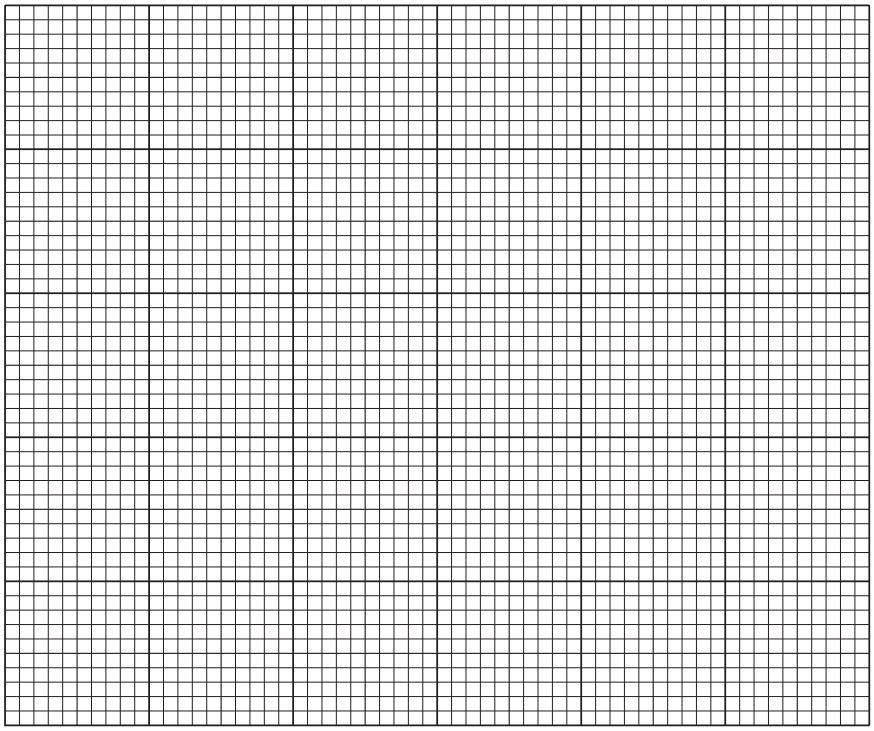

[4]

(c) Determine the gradient G of the graph. Show clearly on the graph how you obtained the necessary information.

View solution

G = ... [2]

(d) The gradient G is numerically equal to the weight W of the metre rule.

View solution

Write down the value of W to an appropriate number of significant figures for this experiment. Include the unit.

W = ... [2]

[Total: 11]

© UCLES 2019

2 In this experiment, you will investigate the resistance of lamps.

The circuit shown in Fig. 2.1 has been set up for you.

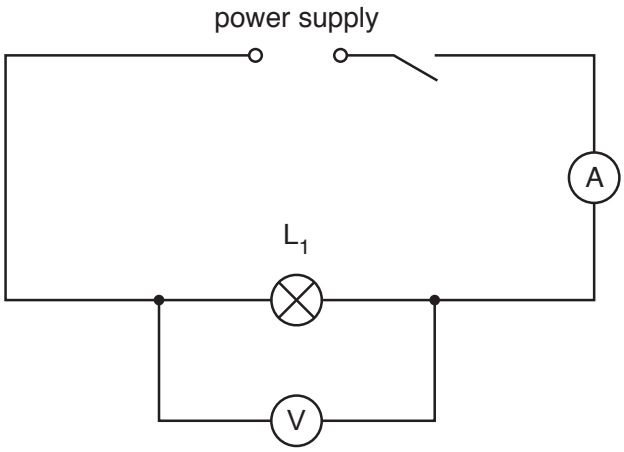

Fig. 2.1

(a) (i) Close the switch. Measure and record the potential difference (p.d.) V_1 across the lamp L_1 and the current I_1 in the circuit. Open the switch.

View solution

V_1 = ...

I_1 = ...
[2]

(ii) Calculate the resistance R_1 of the lamp L_1 using the equation $R_1 = \frac{V_1}{I_1}$.

View solution

R_1 = ... [1]

(b) Disconnect the voltmeter.

View solution

Connect the lamp L_2 in series with the lamp L_1.

Connect the voltmeter across the two lamps L_1 and L_2. Close the switch.

- Measure and record the p.d. V_2 across lamps L_1 and L_2 and the current I_2 in the circuit. Open the switch.

V_2 = ...

I_2 = ...

- Calculate the combined resistance R_2 of lamps L_1 and L_2 connected in series, using the equation $R_2 = \frac{V_2}{I_2}$.

R_2 = ...
[1]

(c) Disconnect the voltmeter.

View solution

Connect the lamp L_3 in series with lamps L_1 and L_2.

Connect the voltmeter across all three lamps. Close the switch.

- Measure and record the potential difference V_3 across the three lamps and the current I_3 in the circuit. Open the switch.

V_3 = ...

I_3 = ...

- Calculate the combined resistance R_3 of lamps L_1, L_2 and L_3 connected in series, using the equation $R_3 = \frac{V_3}{I_3}$.

R_3 = ...
[2]

© UCLES 2019

(d) A student suggests that the resistance R_3 of the three lamps connected in series should be given by the equation $R_3 = 3 \times R_1$.

View solution

State whether your results agree with this suggestion. Justify your answer by reference to your results.

statement .....

justification .....

.....

.....

[2]

(e) Complete the circuit diagram in Fig. 2.2 to show:

View solution

- three lamps connected in parallel
- a voltmeter connected to measure the potential difference across the lamps
- a variable resistor connected to control the current in all three lamps.

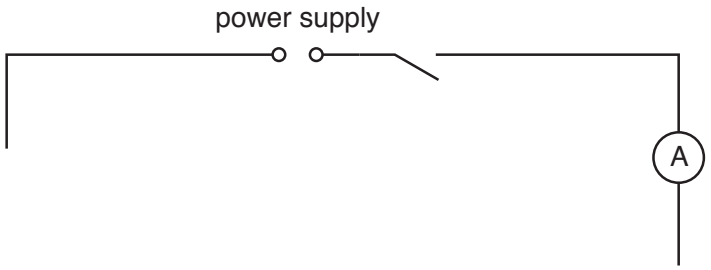

Fig. 2.2

[3]

[Total: 11]

© UCLES 2019

BLANK PAGE

3 In this experiment, you will investigate the cooling of water.

(a) Use the thermometer to measure room temperature θ_R.

View solution

θ_R = ... [1]

(b) • Pour 200 cm^3 of hot water into the beaker. Place the thermometer in the beaker.

View solution

- Measure the temperature θ of the hot water in the beaker and immediately start the stopclock.
- Record this temperature in Table 3.1 at time $t = 0$.
- Continue recording the temperature θ of the water every 60 s until you have a total of six sets of readings of time and temperature in Table 3.1.
- Complete the column headings in Table 3.1.

Table 3.1

t/	θ/
0	

[2]

(c) • Calculate the decrease in temperature $\Delta\theta_1$ during the **first** 120 s.

View solution

$\Delta\theta_1$ = ...

- Calculate the decrease in temperature $\Delta\theta_2$ during the **last** 120 s.

$\Delta\theta_2$ = ...
[1]

© UCLES 2019

(d) (i) Tick the box to show your conclusion from the results in **(c)**.

View solution

☐ The average rate of cooling is greater in the first 120 s than the average rate of cooling in the last 120 s.

☐ The average rate of cooling is less in the first 120 s than the average rate of cooling in the last 120 s.

☐ The average rate of cooling is the same in the first 120 s as in the last 120 s.

[1]

(ii) Justify your conclusion in **(d)(i)** by reference to the results.

View solution

.....

.....

..... [2]

(e) Suggest **two** ways in which you could reduce the rate of loss of thermal energy from the beaker in this type of experiment.

View solution

1 .....

.....

2 .....

.....

[2]

(f) Draw a diagram of a measuring cylinder being used to determine the volume of water poured into the measuring cylinder. Show clearly the water level and draw a straight line showing the line of sight required to obtain an accurate reading of the volume of water.

View solution

[2]

[Total: 11]

© UCLES 2019

4 A student investigates the time taken for metal balls to stop moving after being released on a curved track. Fig. 4.1 shows the shape of the track. The track is flexible, so the shape of the curve can be changed.

View solution

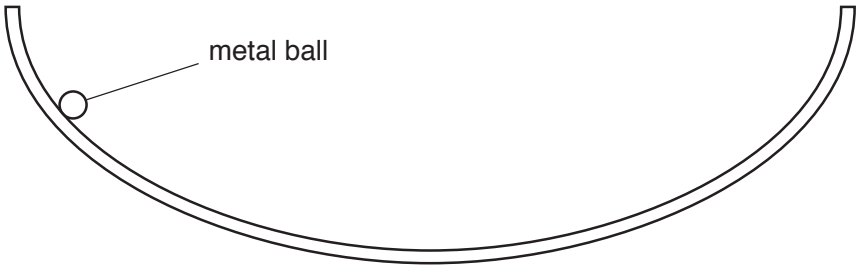

Fig. 4.1

The following apparatus is available:

a selection of metal balls of different masses
the flexible track
clamps to hold the track
a stopwatch
a tape measure
a metre rule

The student can also use other apparatus and materials that are usually available in a school laboratory.

Plan an experiment to investigate a factor that affects the time taken for metal balls to stop moving after being released on a curved track. You are **not** required to carry out this investigation.

In your plan, you should:

- describe how you would expect the balls to move
- explain how you would carry out the investigation
- state which variables you would keep constant and which variable you would change
- draw a table, or tables, with column headings, to show how you would display your readings (you are **not** required to enter any readings in the table)
- explain how you would use your readings to reach a conclusion.

You may add to the diagram in Fig. 4.1 if it helps your explanation.

© UCLES 2019

.....

.....

.....

.....

.....

.....

.....

.....

.....

.....

.....

.....

.....

.....

.....

.....

.....

.....

.....

.....

.....

.....

.....

.....

.....

[7]

[Total: 7]

BLANK PAGE

Permission to reproduce items where third-party owned material protected by copyright is included has been sought and cleared where possible. Every reasonable effort has been made by the publisher (UCLES) to trace copyright holders, but if any items requiring clearance have unwittingly been included, the publisher will be pleased to make amends at the earliest possible opportunity.

To avoid the issue of disclosure of answer-related information to candidates, all copyright acknowledgements are reproduced online in the Cambridge Assessment International Education Copyright Acknowledgements Booklet. This is produced for each series of examinations and is freely available to download at www.cambridgeinternational.org after the live examination series.

Cambridge Assessment International Education is part of the Cambridge Assessment Group. Cambridge Assessment is the brand name of the University of Cambridge Local Examinations Syndicate (UCLES), which itself is a department of the University of Cambridge.

© UCLES 2019