Cambridge IGCSE

Cambridge Assessment International Education
Cambridge International General Certificate of Secondary Education

CANDIDATE NAME									
CENTRE NUMBER						CANDIDATE NUMBER				

PHYSICS **0625/53**

Paper 5 Practical Test **October/November 2019**

1 hour 15 minutes

Candidates answer on the Question Paper.

Additional Materials: As listed in the Confidential Instructions

READ THESE INSTRUCTIONS FIRST

Write your centre number, candidate number and name in the spaces at the top of the page.
Write in dark blue or black pen.
You may use an HB pencil for any diagrams or graphs.
Do not use staples, paper clips, glue or correction fluid.
DO **NOT** WRITE IN ANY BARCODES.

Answer **all** questions.
You are advised to spend about 20 minutes on each of questions 1 to 3, and about 15 minutes on question 4.
Electronic calculators may be used.
You may lose marks if you do not show your working or if you do not use appropriate units.

At the end of the examination, fasten all your work securely together.
The number of marks is given in brackets [ ] at the end of each question or part question.

For Examiner's Use	
1	
2	
3	
4	
Total	

This syllabus is regulated for use in England, Wales and Northern Ireland as a Cambridge International Level 1/Level 2 Certificate.

This document consists of **11** printed pages and **1** blank page.

© UCLES 2019

1 In this experiment, you will investigate how the resistance of a filament lamp changes as the potential difference (p.d.) across it changes.

The circuit has been set up for you.
Carry out the following instructions, referring to Fig. 1.1.

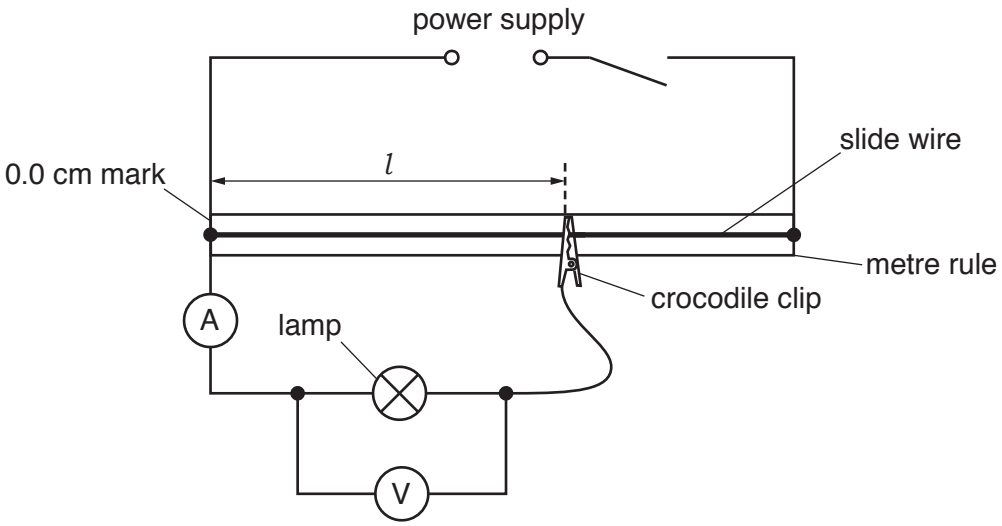

Fig. 1.1

(a)

View solution

- Close the switch.
- Adjust the position of the crocodile clip, so that the length l of the slide wire connected is 20.0 cm.
- Record in Table 1.1 the value of the p.d. V and the current I for the lamp.
- Move the crocodile clip and record values of V and I for l = 40.0 cm, 60.0 cm, 80.0 cm and 100.0 cm.
- Open the switch.

[2]

Table 1.1

l/cm	V/V	I/A	R/Ω
20.0			
40.0			
60.0			
80.0			
100.0			

(b) Calculate, and record in Table 1.1, the resistance R of the lamp at each value of l.
Use the equation $R = \frac{V}{I}$.

View solution [1]

© UCLES 2019

(c) Plot a graph of R/Ω (y-axis) against V/V (x-axis).

View solution

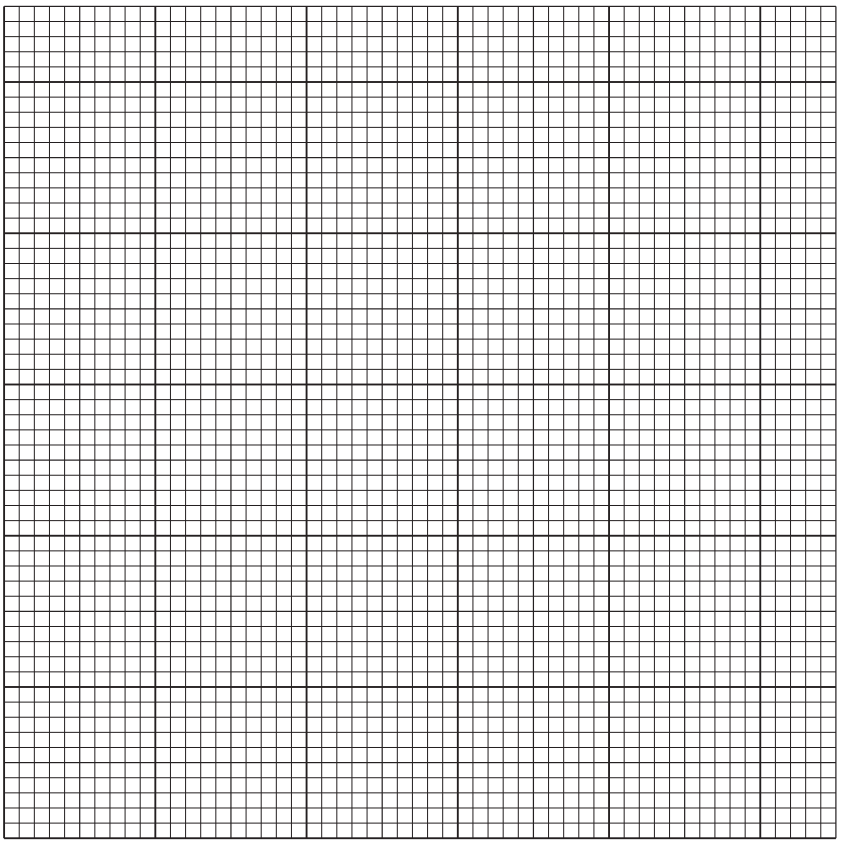

[4]

(d) State what the shape of the graph tells you about how the resistance of the lamp changes with the temperature of the filament.

Justify your statement using your results from the graph and your observation of the brightness of the lamp as the length of the slide wire changes.

statement .....

justification .....

.....

[2]

View solution

(e) In this type of experiment, it is possible to change the current and potential difference for the lamp by using a variable resistor instead of a slide wire.

On Fig. 1.2, complete the circuit diagram to show a variable resistor used for this purpose.

View solution

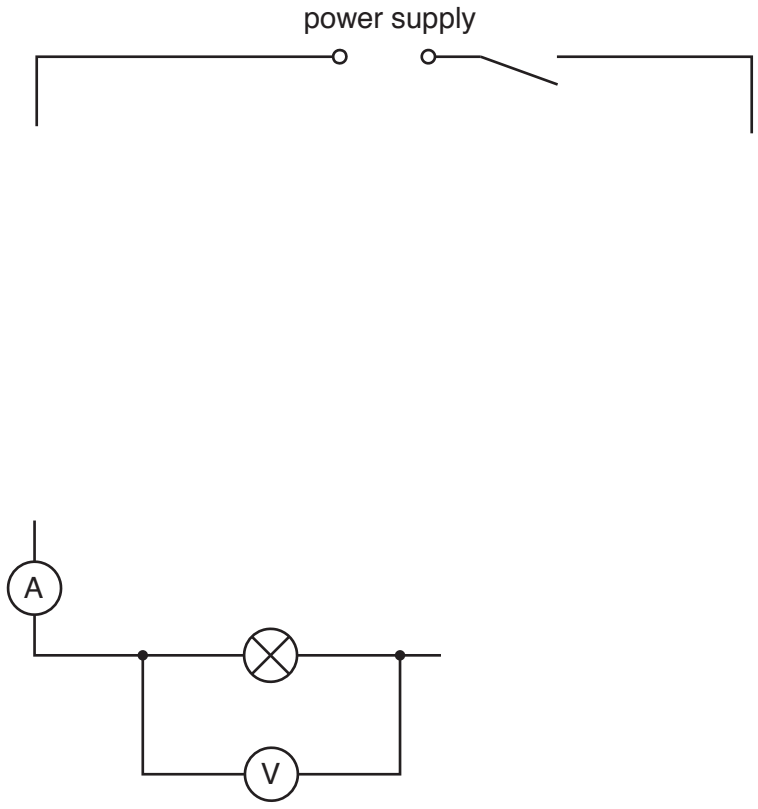

Fig. 1.2

[2]

[Total: 11]

2 In this experiment you will determine the focal length of a converging lens by two different methods.

Carry out the following instructions, referring to Fig. 2.1.



Fig. 2.1

(a)

- Arrange the apparatus as shown in Fig. 2.1 and switch on the lamp.
- Set the distance *u* between the illuminated triangle and the lens to 25.0 cm.
- Place the screen near the lens.
- Move the screen until a sharp image of the triangle is seen on the screen.

Method 1

(i) Measure the distance *v* between the lens and the screen as indicated in Fig. 2.1.

v = ... [1]

(ii) Calculate a value f_1 for the focal length of the lens, using the equation $f_1 = \frac{uv}{(u + v)}$.

f_1 = ... [2]

(iii) Briefly describe a technique to obtain an image on the screen that is as sharp as possible in this experiment.

.....

.....

..... [1]

Method 2

(b) Keep the screen and lens in the same place so that *u* and *v* are the same as in (a).

View solution

(i) Measure h_I, the height of the image of the triangle on the screen.

h_I = ...

Measure h_O, the height of the illuminated triangle, as indicated in Fig. 2.1.

h_O = ...
[1]

(ii) Calculate a value M for the magnification, using the equation $M = \frac{h_I}{h_O}$.

M = ... [1]

(iii) Calculate a second value f_2 for the focal length of the lens, using the equation $f_2 = \frac{v}{(M + 1)}$.

f_2 = ... [1]

(c) A student suggests that f_1 and f_2 should be equal.
State whether your results support this suggestion. Justify your statement with reference to your results.

statement .....

justification .....

.....
[2]

(d) State **one** precaution that could be taken to ensure that the measurements in the experiment can be taken as reliably as possible.

.....

..... [1]

(e) Suggest which of **Method 1** or **Method 2** is likely to give the more accurate value for the focal length.
Explain the reason for your choice.

View solution

suggestion .....

explanation .....

.....

.....
[1]

[Total: 11]

© UCLES 2019

3 In this experiment you will investigate the behaviour of a spring.

A stand and spring have been set up for you as shown in Fig. 3.1.

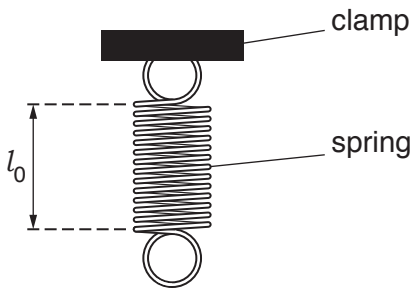

Fig. 3.1

(a) (i) Measure the length l_0 of the spring without any load.

View solution

l_0 = ... cm [1]

(ii) Describe **two** precautions that could be taken when measuring the length of the stationary spring, to ensure an accurate reading. You may draw a diagram.

View solution

1 .....

.....

2 .....

.....

[2]

(b) Carry out the following instructions, referring to Fig. 3.2.

View solution

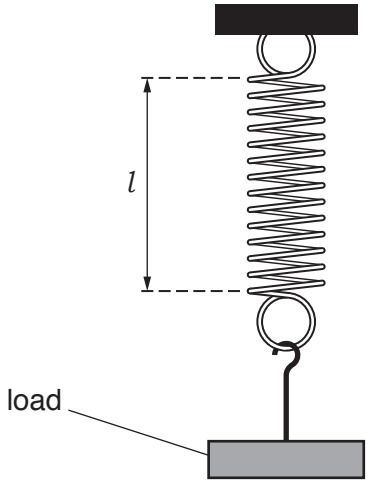

Fig. 3.2

- Hang a load L = 1.0 N on the spring as shown in Fig. 3.2.
- Measure, and record in Table 3.1, the stretched length l of the spring.
- Repeat the process for L values of 2.0 N and 3.0 N.

Table 3.1

L / N	l / cm	e / cm
1.0		
2.0		
3.0		

[1]

(c) Calculate, and record in Table 3.1, the extension e of the spring for each load L. Use your values from **(a)** and **(b)** and the equation $e = (l - l_0)$.

View solution

[1]

© UCLES 2019

(d)

- Remove load *L* from the spring. Suspend object **X** from the spring. Measure the stretched length l_X of the spring.

l_X = ... cm

- Estimate the weight W_X of object **X**.
  Explain how you obtained your answer.

View solution

.....

.....

.....

W_X = ... N

[2]

(e) (i) A student suggests that *e* is directly proportional to *L*.
State whether your results support this suggestion.
Use values from your results in Table 3.1 to justify your statement.

View solution

statement .....

justification .....

.....

.....

[2]

(ii) The student wishes to plot a graph of *L* against *e* to test if the two quantities are proportional.
State how her graph line could show that *e* is directly proportional to *L*.

View solution

.....

.....

..... [2]

[Total: 11]

© UCLES 2019

4 A student is investigating ways of slowing the rate of cooling of hot liquids in a container.
The student knows that a lid will reduce the rate of cooling. He wants to find out if the thickness of the lid makes any difference to the rate of cooling.

Plan an experiment which will enable him to compare the effects of lids of different thicknesses.
You are **not** required to carry out the experiment.

View solution

In your plan, you should:

- list the apparatus needed
- explain briefly how you would carry out the investigation, including the measurements to be taken
- state any key variables that would need to be kept the same
- draw a suitable table or tables, with column headings, to show how the readings would be displayed (you are **not** required to enter any readings in the table)
- explain how you would use your readings to reach a conclusion.

You may draw a diagram if it helps to explain your plan.

.....

.....

.....

.....

.....

© UCLES 2019

[7]

[Total: 7]

BLANK PAGE

Permission to reproduce items where third-party owned material protected by copyright is included has been sought and cleared where possible. Every reasonable effort has been made by the publisher (UCLES) to trace copyright holders, but if any items requiring clearance have unwittingly been included, the publisher will be pleased to make amends at the earliest possible opportunity.

To avoid the issue of disclosure of answer-related information to candidates, all copyright acknowledgements are reproduced online in the Cambridge Assessment International Education Copyright Acknowledgements Booklet. This is produced for each series of examinations and is freely available to download at www.cambridgeinternational.org after the live examination series.

Cambridge Assessment International Education is part of the Cambridge Assessment Group. Cambridge Assessment is the brand name of the University of Cambridge Local Examinations Syndicate (UCLES), which itself is a department of the University of Cambridge.

© UCLES 2019