Cambridge IGCSE

Cambridge Assessment International Education
Cambridge International General Certificate of Secondary Education

CANDIDATE NAME									
CENTRE NUMBER						CANDIDATE NUMBER				

PHYSICS **0625/62**

Paper 6 Alternative to Practical **October/November 2019**

1 hour

Candidates answer on the Question Paper.

No Additional Materials are required.

READ THESE INSTRUCTIONS FIRST

Write your centre number, candidate number and name on all the work you hand in.
Write in dark blue or black pen.
You may use an HB pencil for any diagrams or graphs.
Do not use staples, paper clips, glue or correction fluid.
DO **NOT** WRITE IN ANY BARCODES.

Answer **all** questions.

Electronic calculators may be used.
You may lose marks if you do not show your working or if you do not use appropriate units.

At the end of the examination, fasten all your work securely together.
The number of marks is given in brackets [ ] at the end of each question or part question.

This syllabus is regulated for use in England, Wales and Northern Ireland as a Cambridge International Level 1/Level 2 Certificate.

© UCLES 2019

1 A student investigates a pendulum. Fig. 1.1 and Fig. 1.2 show some of the apparatus used.

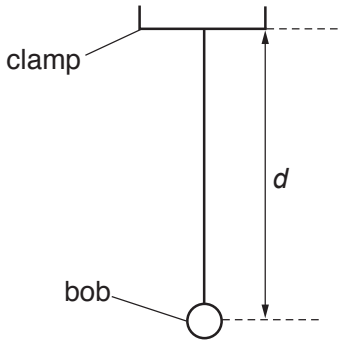

Fig. 1.1

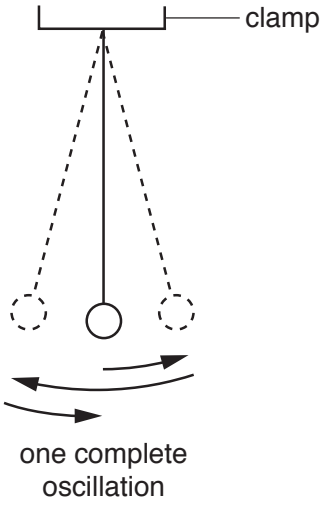

Fig. 1.2

View solution

(a) The student adjusts the length of the pendulum until the distance *d*, measured to the centre of the bob, is 50.0 cm. State one precaution that you would take to obtain the length of 50.0 cm as accurately as possible.

.....

..... [1]

View solution

(b) The student displaces the bob slightly and releases it so that it swings. Fig. 1.2 shows one complete oscillation of the pendulum.

(i) He measures the time *t* for 20 complete oscillations. The time *t* is shown on the stopwatch in Fig. 1.3.



Fig. 1.3

In the first row of Table 1.1, record the time *t* shown in Fig. 1.3. [1]

View solution

(ii) Calculate, and record in Table 1.1, the period *T* of the pendulum. The period is the time for one complete oscillation. [1]

View solution

(iii) Calculate T^2. Record its value in Table 1.1. [1]

© UCLES 2019

(c) The student repeats the procedure in **(b)** using $d = 60.0\,\text{cm}$, $70.0\,\text{cm}$, $80.0\,\text{cm}$ and $100.0\,\text{cm}$. The readings are shown in Table 1.1.

View solution

Table 1.1

d/cm	t/s	T/s	T^2/s^2
50.0			
60.0	30.00	1.50	2.25
70.0	33.20	1.66	2.76
80.0	35.80	1.79	3.20
100.0	39.80	1.99	3.96

Plot a graph of T^2/s^2 (y-axis) against d/cm (x-axis). You do **not** need to start your axes at the origin (0,0).

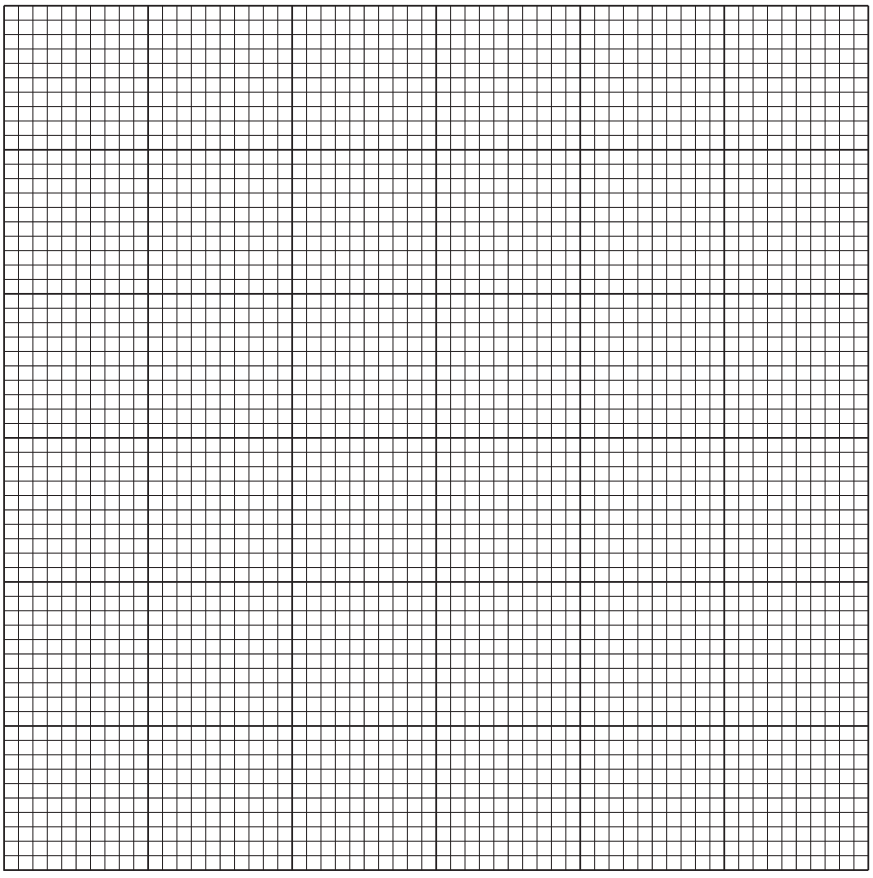

[4]

(d) Determine the gradient G of the line. Show clearly on the graph how you obtained the necessary information.

View solution

$G =$ ..... [2]

© UCLES 2019

(e) Calculate the acceleration of free fall g in m/s^2 using the equation $g = \frac{0.395}{G}$, where G is your gradient from **(d)**.

View solution

Write down the value of g to a suitable number of significant figures for this experiment.

g = ...m/s^2 [2]

[Total: 12]

© UCLES 2019

2 A student determines the resistance of a resistance wire.

She uses the circuit shown in Fig. 2.1.

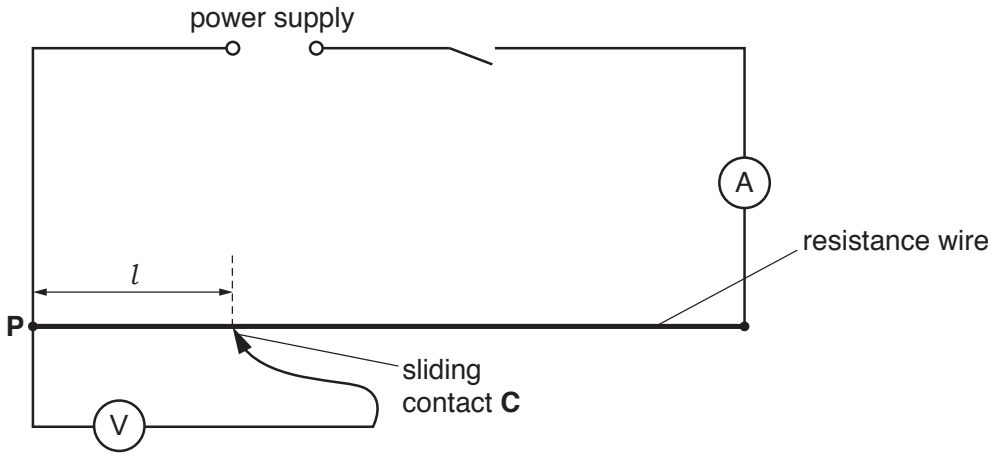

Fig. 2.1

(a) She measures the current I in the circuit. Write down the current reading shown in Fig. 2.2.

View solution

I = ... [2]

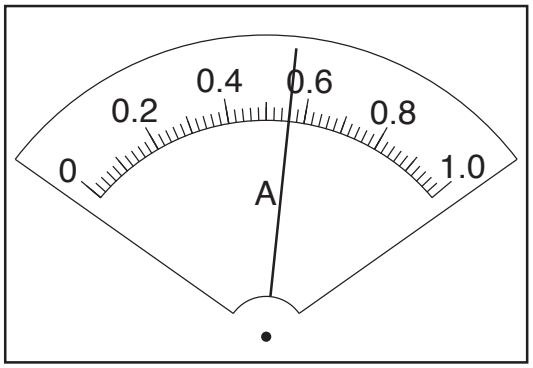

Fig. 2.2

(b) She places the sliding contact **C** at a distance $l = 20.0\,\text{cm}$ from **P**.

She records the potential difference V across the length l of the resistance wire.

She repeats the procedure using l values of 40.0 cm, 60.0 cm, 80.0 cm and 100.0 cm.

The readings are shown in Table 2.1.

Table 2.1

l/cm	V/	R/
20.0	0.60	
40.0	1.10	1.96
60.0	1.71	3.05
80.0	2.30	4.11
100.0	2.78	4.96

(i) Calculate, and record in Table 2.1, the resistance R of 20.0 cm of the resistance wire. Use the equation $R = \frac{V}{I}$.

[2]

(ii) Complete the column headings in Table 2.1. [1]

View solution

View solution

(c) Look carefully at the values of l and R in Table 2.1.

View solution

(i) Tick **one** box to show your conclusion from the results.

- ☐ R is constant within the limits of experimental accuracy.
- ☐ R is directly proportional to l within the limits of experimental accuracy.
- ☐ R decreases as l increases.
- ☐ There is no simple relationship between R and l.

[1]

View solution

(ii) Justify your conclusion by reference to the results.

.....

.....

..... [1]

View solution

(d) **(i)** Use the values in Table 2.1 to estimate the potential difference V_e across 50.0 cm of the resistance wire.

V_e = ... [1]

View solution

(ii) Calculate the resistance of 50.0 cm of the resistance wire using the equation $R = \frac{V_e}{I}$.

Use the value of current I from part **(a)**. Give your answer to a suitable number of significant figures for this experiment and include the unit.

R = ... [2]

View solution

(e) In this type of experiment, it is sensible to keep the temperature of the resistance wire as close to room temperature as possible. Suggest **one** simple way to minimise the rise in temperature of the resistance wire.

.....

..... [1]

[Total: 11]

© UCLES 2019

3 A student determines the focal length *f* of a lens.

Fig. 3.1 shows the set-up.

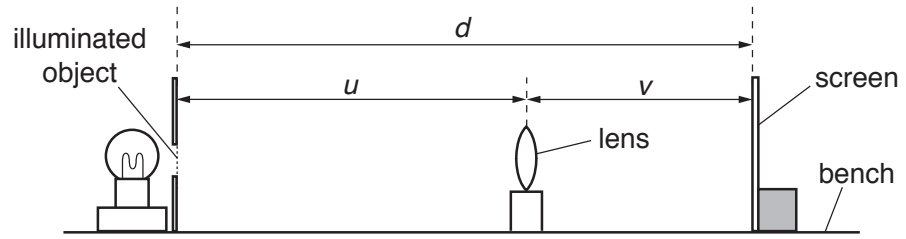

Fig. 3.1

(a) • He places the screen at a fixed distance from the illuminated object.

View solution

• He places the lens between the object and the screen so that the lens is very close to the screen.

• He moves the lens slowly away from the screen until a clearly focused image is formed on the screen.

• He measures the distance *u* between the object and the centre of the lens and the distance *v* between the centre of the lens and the screen. The readings are shown in Table 3.1.

(i) On Fig. 3.1, measure the distance *d* between the illuminated object and the screen.

d = ... [1]

View solution

(ii) Fig. 3.1 is drawn 1/10th actual size. Calculate the actual distance *D* between the illuminated object and the screen.

D = ... [1]

View solution

(b) Calculate, and record in Table 3.1, the focal length *f* of the lens using the equation $f = \frac{uv}{D}$. [1]

(c) • The student keeps the screen at the same fixed distance *D* from the illuminated object.

View solution

• He moves the lens slowly away from the screen. The image goes out of focus.

• He continues to move the lens slowly away from the screen until another clearly focused image is formed on the screen.

• He records the new readings of *u* and *v* in Table 3.1.

(i) Calculate, and record in Table 3.1 the new value for the focal length *f* of the lens using the equation $f = \frac{uv}{D}$. [1]

© UCLES 2019

Table 3.1

u/cm	v/cm	f/cm
59.8	20.4	
19.8	60.0	

(ii) Calculate the average value f_A of the focal length of the lens. Give your answer to a suitable number of significant figures for this experiment.

View solution

f_A = ... cm [2]

(d) State **one** precaution that you would take to obtain accurate readings in this experiment.

View solution

.....

..... [1]

(e) Another student wants to obtain more measurements for u and for v to check the value for the focal length f of the lens. The student moves the screen a distance of 40.0 cm to the right.

View solution

(i) Calculate the new value for the distance D between the illuminated object and the screen.

D = ... cm [1]

(ii) The student moves the lens to a new position which is a distance from the object u = 22.2 cm. He observes the image on the screen and says it is clearly focussed at a distance v = 97.9 cm.

View solution

Calculate the new value of the focal length f of the lens using $f = \frac{uv}{D}$.

f = ... cm [1]

(iii) State and explain briefly whether the values for f_A and f in **(e)(ii)** are the same within the limits of experimental accuracy.

View solution

.....

.....

..... [1]

[Total: 10]

4 A student investigates the time taken for ice cubes in a container to melt using different insulating materials on the container.

View solution

The following apparatus is available:

a copper container
a variety of insulating materials that can be wrapped round the copper container
a thermometer
a stopwatch
a supply of ice cubes

The student can also use other apparatus and materials that are usually available in a school laboratory.

Plan an experiment to investigate the time taken for ice cubes to melt using different insulating materials.

In your plan, you should:

- draw a diagram of the apparatus used
- explain briefly how you would carry out the investigation
- state the key variables that you would control
- draw a table, or tables, with column headings, to show how you would display your readings (you are **not** required to enter any readings in the table)
- explain how you would use your readings to reach a conclusion.

.....

.....

.....

.....

.....

.....

.....

.....

.....

© UCLES 2019

.....

.....

.....

.....

.....

.....

.....

.....

..... [7]

[Total: 7]

© UCLES 2019

BLANK PAGE

Permission to reproduce items where third-party owned material protected by copyright is included has been sought and cleared where possible. Every reasonable effort has been made by the publisher (UCLES) to trace copyright holders, but if any items requiring clearance have unwittingly been included, the publisher will be pleased to make amends at the earliest possible opportunity.

To avoid the issue of disclosure of answer-related information to candidates, all copyright acknowledgements are reproduced online in the Cambridge Assessment International Education Copyright Acknowledgements Booklet. This is produced for each series of examinations and is freely available to download at www.cambridgeinternational.org after the live examination series.

Cambridge Assessment International Education is part of the Cambridge Assessment Group. Cambridge Assessment is the brand name of the University of Cambridge Local Examinations Syndicate (UCLES), which itself is a department of the University of Cambridge.

© UCLES 2019