Cambridge Assessment International Education

Cambridge IGCSE™

PHYSICS **0625/12**

Paper 1 Multiple Choice (Core) **October/November 2020**

45 minutes

You must answer on the multiple choice answer sheet.

You will need: Multiple choice answer sheet
Soft clean eraser
Soft pencil (type B or HB is recommended)

INSTRUCTIONS

- There are **forty** questions on this paper. Answer **all** questions.
- For each question there are four possible answers **A**, **B**, **C** and **D**. Choose the **one** you consider correct and record your choice in soft pencil on the multiple choice answer sheet.
- Follow the instructions on the multiple choice answer sheet.
- Write in soft pencil.
- Write your name, centre number and candidate number on the multiple choice answer sheet in the spaces provided unless this has been done for you.
- Do **not** use correction fluid.
- Do **not** write on any bar codes.
- You may use a calculator.
- Take the weight of 1.0 kg to be 10 N (acceleration of free fall = 10 m / s^2).

INFORMATION

- The total mark for this paper is 40.
- Each correct answer will score one mark. A mark will not be deducted for a wrong answer.
- Any rough working should be done on this question paper.

This document has **16** pages. Blank pages are indicated.

© UCLES 2020

1 A student measures the volumes of three liquids using three different measuring cylinders.

View solution

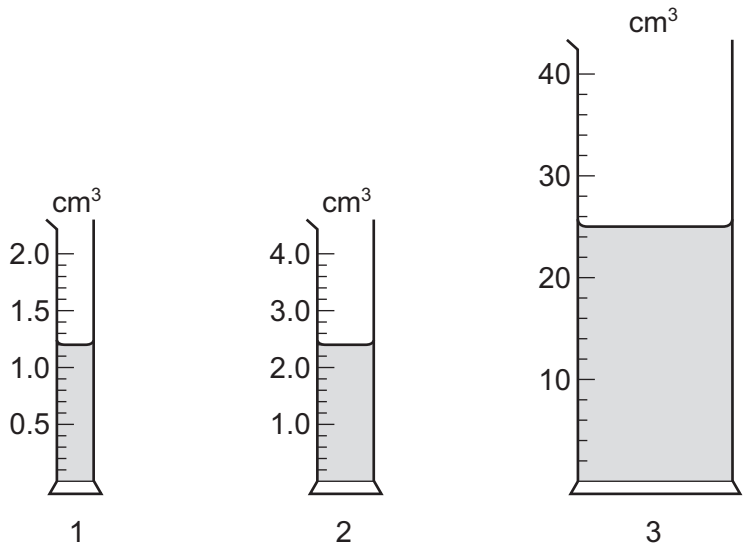

The table shows the volumes recorded by the student.

measuring cylinder	volume / cm^3
1	1.2
2	2.2
3	25

Which readings are correctly recorded?

A 1, 2 and 3 **B** 1 and 2 only **C** 1 and 3 only **D** 1 only

2 A car driver measures the time taken to complete four separate journeys.

View solution

In which journey does the driver have the greatest average speed?

	distance / km	time / h
A	60	2
B	60	3
C	120	3
D	120	4

© UCLES 2020

3 The graph shows how the speed of an object varies with time.

View solution

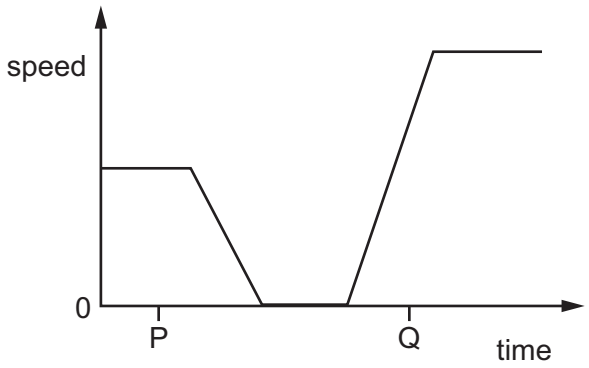

Which row describes the motion of the object at times P and Q?

	P	Q
A	at rest	accelerating
B	at rest	decelerating
C	moving with constant speed	accelerating
D	moving with constant speed	decelerating

View solution

4 A stone has a weight of 4.1 N.

What is the mass of the stone?

A 0.41 kg **B** 2.4 kg **C** 4.1 kg **D** 41 kg

View solution

5 Which quantity is weight an example of?

A acceleration

B force

C mass

D pressure

View solution

6 A rectangular metal block is 20 cm long.

The cross-sectional area of the block is 25 cm^2.

The mass of the block is 4000 g.

What is the density of the metal?

A 0.13 g/cm^3 **B** 0.32 g/cm^3 **C** 8.0 g/cm^3 **D** 2000 g/cm^3

© UCLES 2020

7 A force of 4.0 N acts on a beam as shown.

View solution

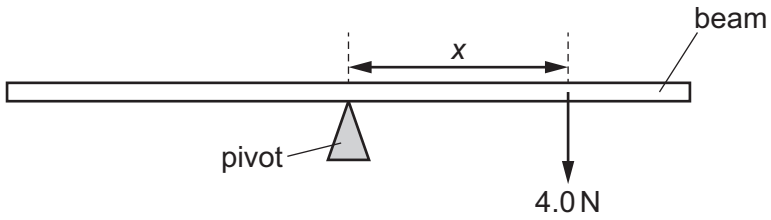

The line of action of the force is a distance *x* from a pivot. The moment of this force about this pivot is 8.0 N cm.

What is distance *x*?

A 0.50 cm **B** 2.0 cm **C** 12 cm **D** 32 cm

8 The diagram shows a stand. The stand holds a heavy mass above the bench.

View solution

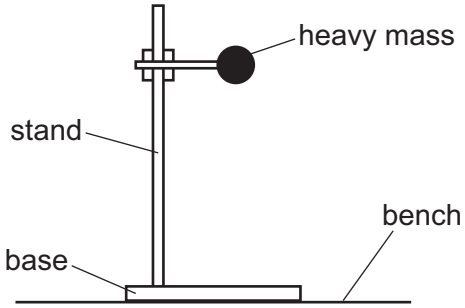

Which two changes would definitely make the stand more stable?

A Lower the mass and make the base narrower.

B Lower the mass and make the base wider.

C Raise the mass and make the base narrower.

D Raise the mass and make the base wider.

9 Two wind farms supply electrical energy to consumers in different ways.

View solution

Wind farm 1 supplies energy directly to consumers and for every 1000 J of energy extracted from the wind, 360 J is transferred to consumers as electrical energy.

Wind farm 2 stores electrical energy in batteries and then supplies energy from the batteries to the consumer. For every 1000 J of energy extracted from the wind, 270 J is transferred to consumers as electrical energy.

Which statement about the two wind farms is correct?

A Wind farm 1 is less reliable and less efficient than wind farm 2.

B Wind farm 1 is less reliable but more efficient than wind farm 2.

C Wind farm 1 is more reliable but less efficient than wind farm 2.

D Wind farm 1 is more reliable and more efficient than wind farm 2.

© UCLES 2020

10 Work is done.

View solution

Which physical quantity is transferred?

A distance

B energy

C force

D temperature

11 To calculate the power produced by a force, the size of the force must be known.

View solution

What else needs to be known to calculate the power?

	the distance that the force moves the object	the time for which the force acts on the object
A	✓	✓
B	✓	✗
C	✗	✓
D	✗	✗

key

✓ = needed

✗ = not needed

12 The diagram shows a mercury barometer.

View solution

Which height is used as a measurement of atmospheric pressure?

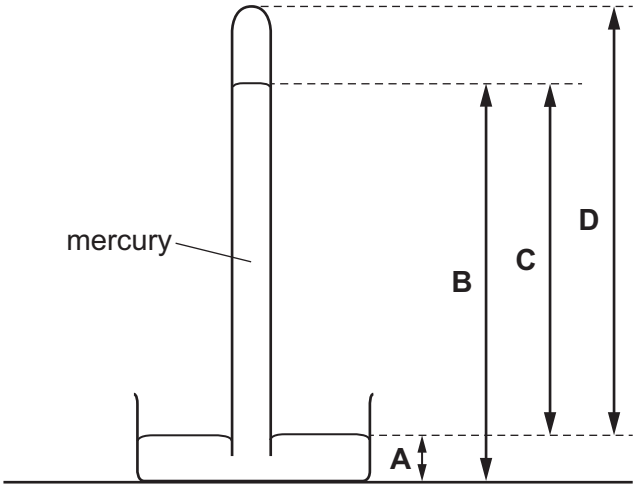

13 A man who weighs 540 N stands with both feet on the ground. The area of contact between one foot and the ground is $0.015\,m^2$.

View solution

What is the pressure exerted on the floor by the man?

A $1800\,N/m^2$

B $3600\,N/m^2$

C $18\,000\,N/m^2$

D $36\,000\,N/m^2$

14 On a warm day, a driver checks the air pressure in a car tyre. At night, the temperature drops and the air pressure in the tyre decreases. There are no air leaks in the tyre.

View solution

Why does the pressure decrease?

A The air molecules in the tyre move more slowly.

B The air molecules in the tyre stop moving.

C The volume of the air in the tyre decreases.

D The volume of the air in the tyre increases.

15 Wet clothes are put out on a line to allow the water in the clothes to evaporate.

View solution

Which type of weather would cause the water to evaporate most quickly?

A a cold day with no wind

B a cold day with wind

C a hot day with no wind

D a hot day with wind

© UCLES 2020

16 A bimetallic strip is used to control the temperature of electrical appliances. It is made of two different metals fixed together.

View solution

The diagram shows the shape of the bimetallic strip before and after heating.

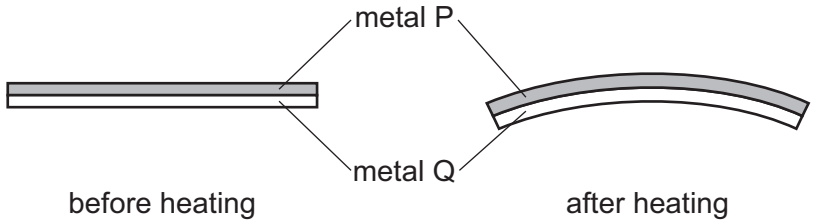

Which statement is correct?

A Metal P contracts more than metal Q on heating.

B Metal Q contracts more than metal P on heating.

C Metal P expands more than metal Q on heating.

D Metal Q expands more than metal P on heating.

17 Samples of four different substances are heated in turn by the same heater, for the same time duration and in the same conditions. The increase in temperature for each sample is recorded in the table.

View solution

Which sample has the highest thermal capacity?

	sample	temperature rise / °C
A	aluminium	6.0
B	copper	8.0
C	mercury	10.0
D	water	5.0

18 Thermal energy is supplied at the same rate to four bars made from different materials.

View solution



After several minutes, there is a temperature difference between X and Y for each bar.

Which statement identifies the bar with the greatest temperature difference between points X and Y, and gives the correct reason?

A copper because it is a good conductor of thermal energy

B lead because it is the densest metal

C plastic because it is a poor conductor of thermal energy

D wood because it is a good conductor of thermal energy

© UCLES 2020

19 A scientist measures the air temperature at different heights from the floor in a cave. The results are recorded in the table.

View solution

height / m	temperature / °C
0	10
10	11
20	13
30	14
40	16

Why does altering the height affect the temperature of the air?

A The molecules in warm air have less energy than the molecules in cool air.

B The molecules in cool air are further apart than the molecules in warm air.

C Warm air is less dense than cool air.

D Cool air rises above warm air.

20 Which row correctly describes light waves?

View solution

	wave type	direction of vibrations
A	longitudinal	parallel to direction of wave travel
B	longitudinal	perpendicular to direction of wave travel
C	transverse	parallel to direction of wave travel
D	transverse	perpendicular to direction of wave travel

21 Waves travel across the surface of water.

View solution

What is meant by the amplitude of the wave?

A the maximum distance of a water particle from its mean position

B how far the wave travels every second

C the number of waves passing a point every second

D the distance between the top of consecutive waves

© UCLES 2020

22 Which diagram shows the image correctly formed by reflection?

View solution

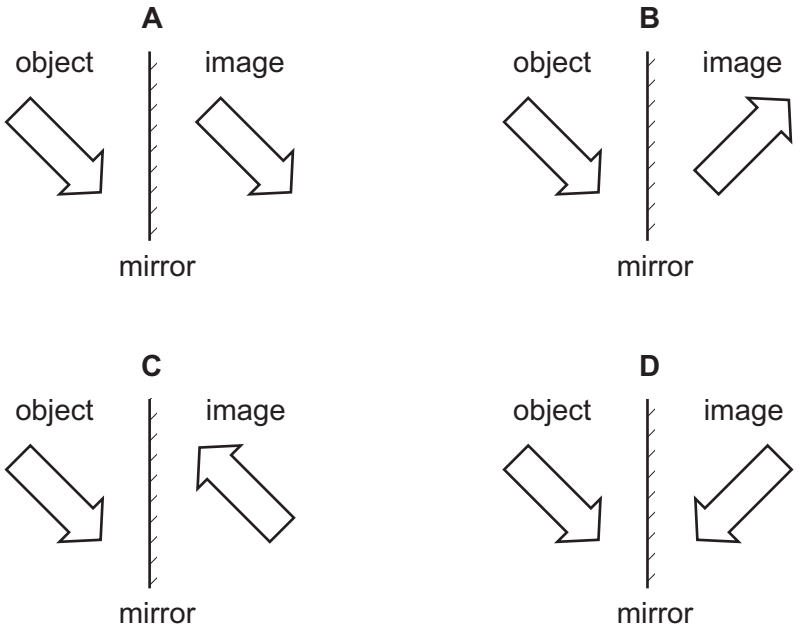

23 A man sees a stone at the bottom of a pool of water.

View solution

Which path could be taken by light from the stone to the man?

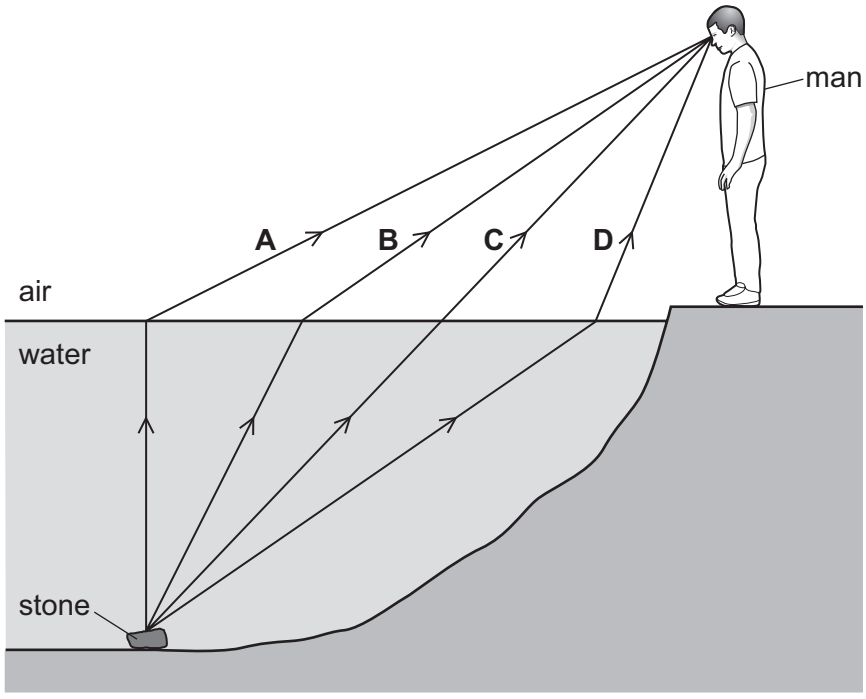

24 White light can be split into different colours by passing it through a prism.

What is the name of this process?

A diffraction

B dispersion

C reflection

D total internal reflection

25 Which type of radiation does a remote controller use to send its instructions to a TV set?

A γ-rays

B infrared radiation

C ultraviolet radiation

D X-rays

26 A police car with its siren sounding is stationary in heavy traffic. A pedestrian notices that, although the loudness of the sound produced does not change, the pitch varies.

Which row describes the amplitude and the frequency of the sound?

	amplitude	frequency
A	constant	constant
B	constant	varying
C	varying	constant
D	varying	varying

27 A student sets up four experiments using bar magnets and other metal objects. The N and S poles of the bar magnets are labelled N and S.

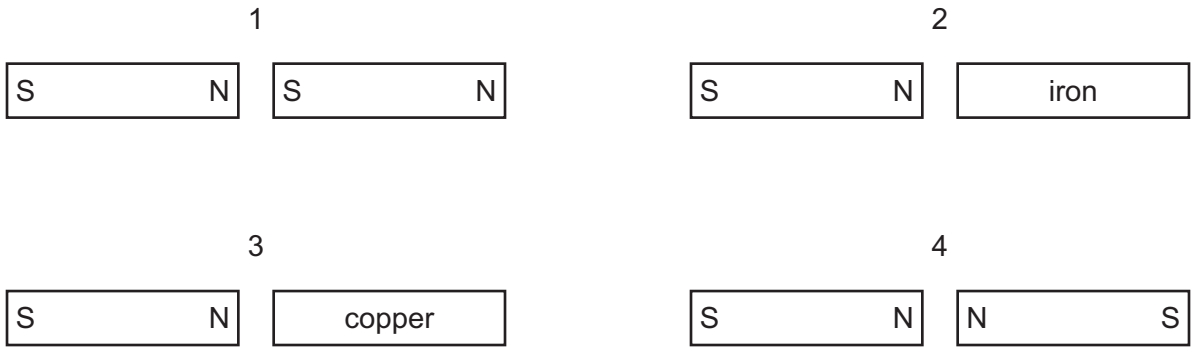

Which pairs attract each other?

A 1 and 2 **B** 1 and 3 **C** 2 and 4 **D** 3 and 4

28 A student uses three small plotting compasses to investigate the magnetic field around a bar magnet.

View solution

Which diagram shows the directions in which the compass needles point?

A

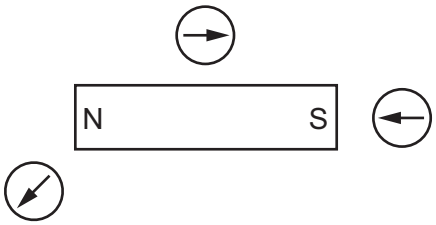

B

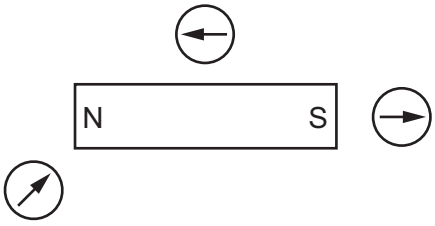

C

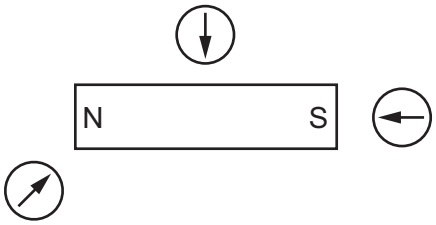

D

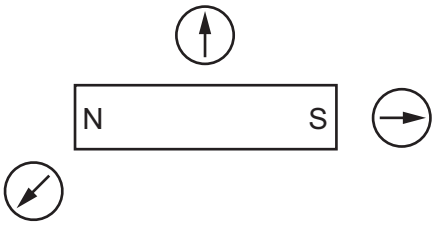

29 A polythene rod is charged negatively by rubbing it with a cloth.

View solution

Which statement explains why the rod has become charged?

A The rod has gained electrons.

B The rod has gained protons.

C The rod has lost electrons.

D The rod has lost protons.

30 There is a current in a variable resistor when a potential difference (p.d.) is applied across it.

View solution

In which situation is the current increased?

A Decrease the p.d. and keep the resistance the same.

B Decrease the p.d. and increase the resistance.

C Keep the p.d. the same and decrease the resistance.

D Keep the p.d. the same and increase the resistance.

© UCLES 2020

31 The circuit shown includes a battery, three lamps X, Y and Z and three switches S_1, S_2 and S_3.

View solution

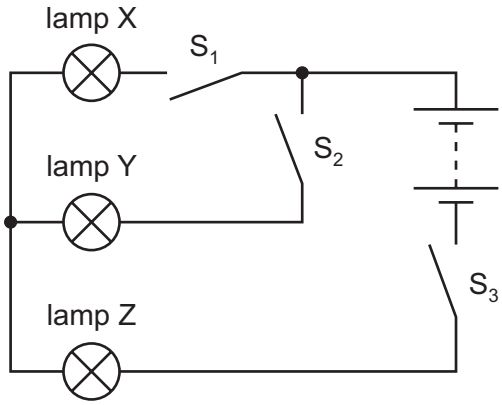

Lamp X is off but lamps Y and Z are lit.

Which switches are closed?

A S_1 and S_2 only

B S_1 and S_3 only

C S_2 and S_3 only

D S_1, S_2 and S_3

32 A student uses four ammeters P, Q, R and S to measure the current in different parts of the circuit shown.

View solution

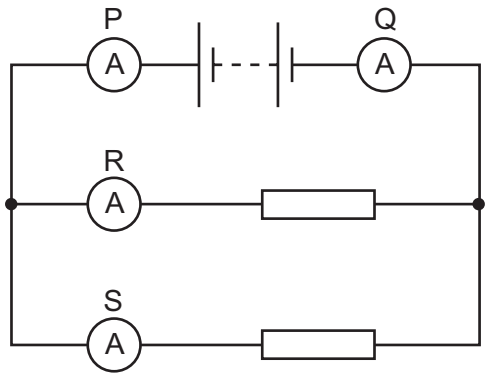

Which two ammeters read the largest current?

A P and Q **B** P and R **C** R and Q **D** R and S

33 An electrical appliance is powered from a mains supply.

View solution

The appliance normally uses a current of 3 A, but the current briefly rises to 4 A at the instant the appliance is switched on. The cable to the appliance is designed for currents up to 6 A.

A fuse is used to protect the circuit.

What should be the rating of the fuse?

A 1 A **B** 3 A **C** 5 A **D** 13 A

© UCLES 2020

34 A student investigates electromagnetic induction. She moves the N pole of a magnet quickly towards a coil of wire. There is a reading on the galvanometer.

View solution

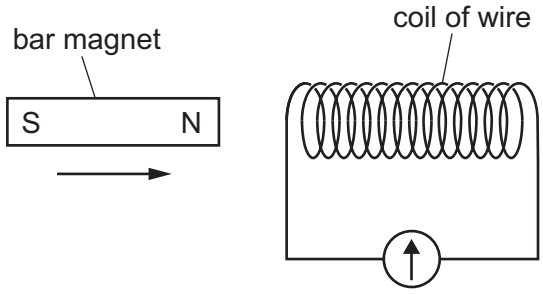

What can she do to get a greater reading on the galvanometer?

A Hold the bar magnet stationary inside the coil.

B Move the bar magnet slowly away from the coil.

C Use a coil of wire with fewer turns on it.

D Use a stronger bar magnet.

35 A transformer is needed to convert a supply of 240 V a.c. into 4800 V a.c..

View solution

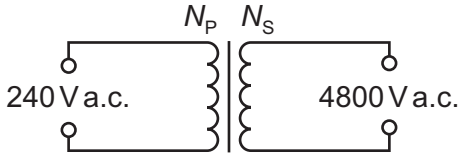

Which pair of coils would be suitable for this transformer?

	number of turns on primary coil N_P	number of turns on secondary coil N_S
A	50	1 000
B	240	48 000
C	480	24
D	2000	100

© UCLES 2020

36 The diagram shows a wire carrying a current in the direction shown. The wire is between the poles of a magnet.

View solution

A force is produced on the wire out of the page.

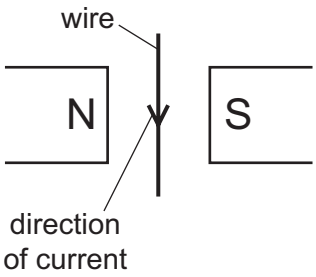

The wire and magnet are now put into different arrangements X, Y and Z. The arrow shows the direction of the current in each case.

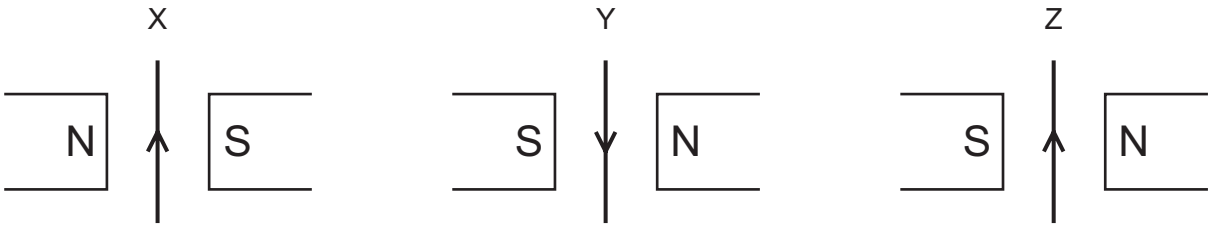

In which arrangements is the force on the wire out of the page?

A X only **B** X and Y **C** X and Z **D** Z only

37 Which statement is correct for the nucleus of **any** atom?

View solution

A The nucleus contains electrons, neutrons and protons.

B The nucleus contains the same number of protons as neutrons.

C The nucleus has a total charge of zero.

D The nucleus is very small compared with the size of the atom.

38 The symbol represents a nucleus of zinc.

View solution

$$^{68}_{30}\mathrm{Zn}$$

Which row gives the numbers of protons and neutrons in this nucleus?

	number of protons	number of neutrons
A	30	38
B	30	68
C	38	30
D	38	68

© UCLES 2020

39 Three types of radiation are α-radiation, β-radiation and γ-radiation.

View solution

Which statement is correct?

A α-radiation is less ionising than β-radiation.

B α-radiation is less ionising than γ-radiation.

C γ-radiation produces no ionisation.

D β-radiation is more ionising than γ-radiation.

40 The graph shows the radioactive decay curve of a substance.

View solution

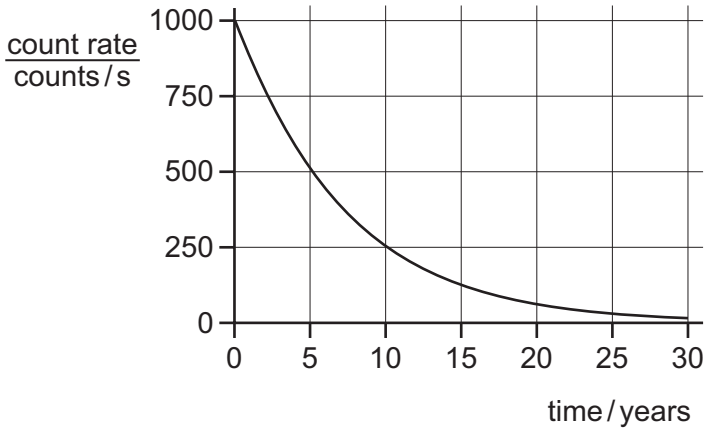

What is the half-life of this substance?

A 0.5 years **B** 5 years **C** 15 years **D** 30 years

BLANK PAGE

Permission to reproduce items where third-party owned material protected by copyright is included has been sought and cleared where possible. Every reasonable effort has been made by the publisher (UCLES) to trace copyright holders, but if any items requiring clearance have unwittingly been included, the publisher will be pleased to make amends at the earliest possible opportunity.

To avoid the issue of disclosure of answer-related information to candidates, all copyright acknowledgements are reproduced online in the Cambridge Assessment International Education Copyright Acknowledgements Booklet. This is produced for each series of examinations and is freely available to download at www.cambridgeinternational.org after the live examination series.

Cambridge Assessment International Education is part of the Cambridge Assessment Group. Cambridge Assessment is the brand name of the University of Cambridge Local Examinations Syndicate (UCLES), which itself is a department of the University of Cambridge.