Cambridge Assessment International Education

Cambridge IGCSE™

CANDIDATE NAME									
CENTRE NUMBER						CANDIDATE NUMBER				

PHYSICS **0625/31**

Paper 3 Theory (Core) **October/November 2020**

1 hour 15 minutes

You must answer on the question paper.

No additional materials are needed.

INSTRUCTIONS

- Answer **all** questions.
- Use a black or dark blue pen. You may use an HB pencil for any diagrams or graphs.
- Write your name, centre number and candidate number in the boxes at the top of the page.
- Write your answer to each question in the space provided.
- Do **not** use an erasable pen or correction fluid.
- Do **not** write on any bar codes.
- You may use a calculator.
- You should show all your working and use appropriate units.
- Take the weight of 1.0 kg to be 10 N (acceleration of free fall = 10 m / s^2).

INFORMATION

- The total mark for this paper is 80.
- The number of marks for each question or part question is shown in brackets [ ].

This document has **20** pages. Blank pages are indicated.

© UCLES 2020

1 Student P and student Q run in a 100 m race.
Fig. 1.1 shows the distance–time graph for each student during the race.

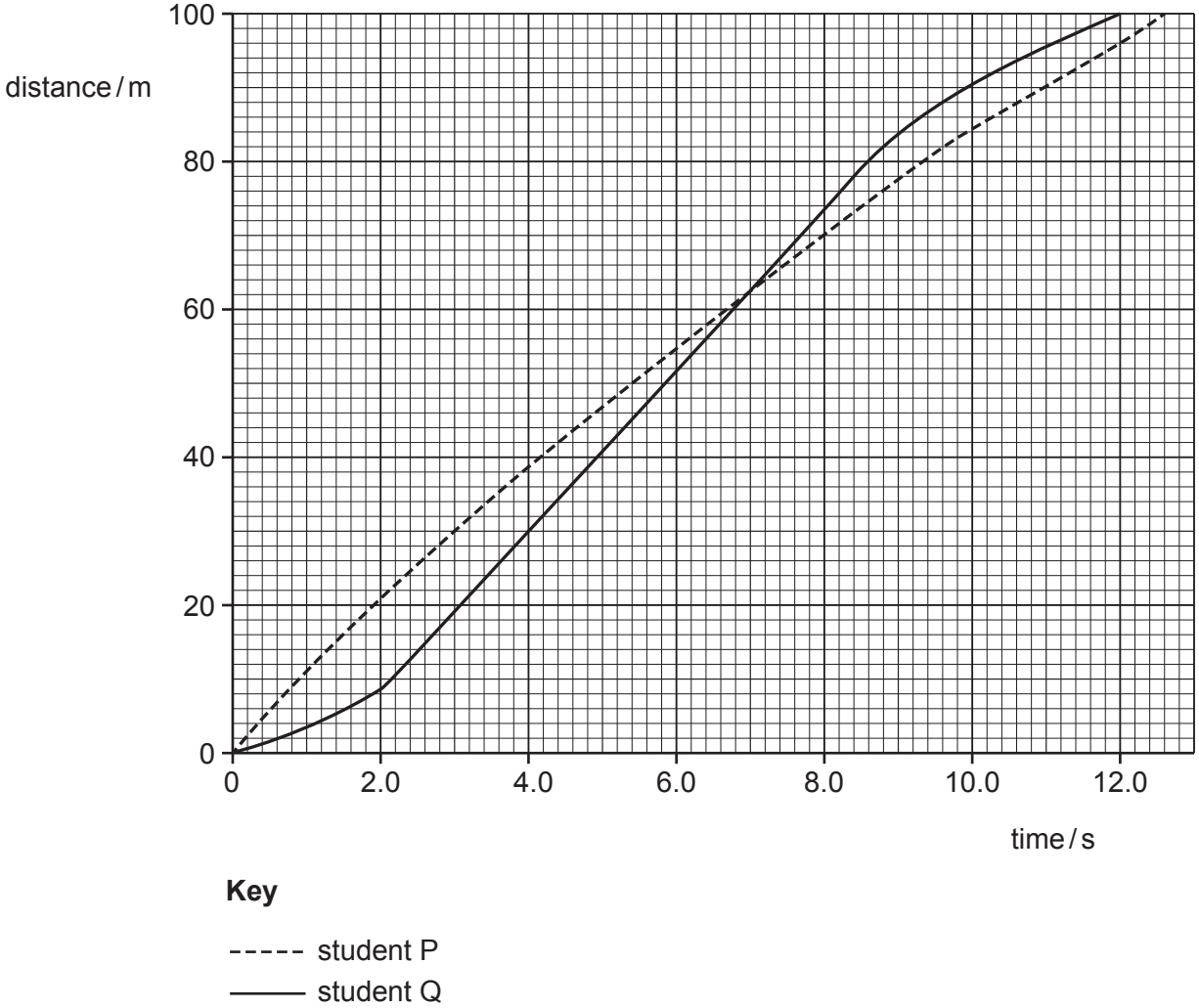

Fig. 1.1

(a) Determine the time taken for student Q to run 100 m.

View solution

time = ... s [1]

(b) Determine the distance between the two students as Q reaches 100 m.

View solution

distance = ... m [1]

(c) Calculate the average speed of student Q during the 100 m race.

View solution

average speed = ... m/s [3]

(d) State which student has the faster speed between 3.0 s and 6.0 s.

View solution

Explain how Fig. 1.1 allows you to compare speeds without calculation.

.....

.....

..... [1]

[Total: 6]

2 Fig. 2.1 shows a beaker containing liquid on a top pan balance.

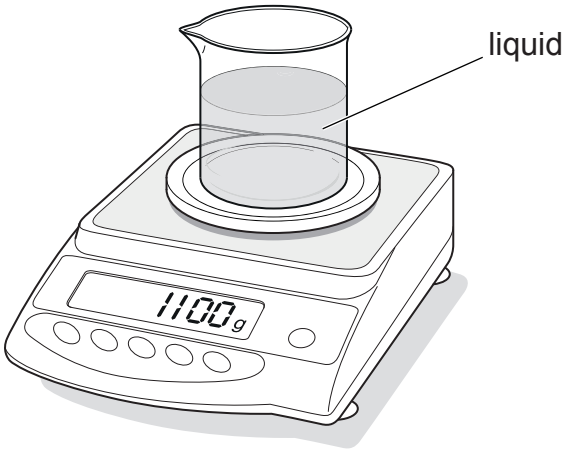

Fig. 2.1

The mass of the empty beaker is 400 g.

(a) Using the information in Fig. 2.1, determine the mass of the liquid in the beaker.

View solution

mass = ... g [1]

(b) The beaker contains 750 cm^3 of liquid.

Calculate the density of the liquid.

View solution

density = ... g/cm^3 [3]

(c) Calculate the weight of the empty beaker.

View solution

weight = ... N [4]

[Total: 8]

© UCLES 2020

3 Fig. 3.1 shows three horizontal forces acting on a car as it moves along a straight road.

The horizontal forces act along the same straight line.

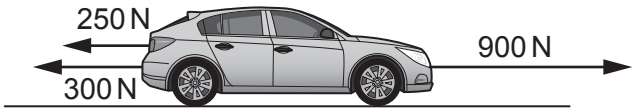

Fig. 3.1

(a) (i) Calculate the size of the resultant horizontal force on the car and state its direction.

View solution

size of resultant force = ... N

direction of resultant force .....

[3]

(ii) The driver presses the brake pedal and the car slows down.
As the car slows down, the kinetic energy of the car decreases by 100 kJ.

View solution

Describe and explain what happens to this 100 kJ of energy.

.....

..... [2]

© UCLES 2020

(b) Fig. 3.2 shows the force applied to the brake pedal by the driver's foot.

View solution

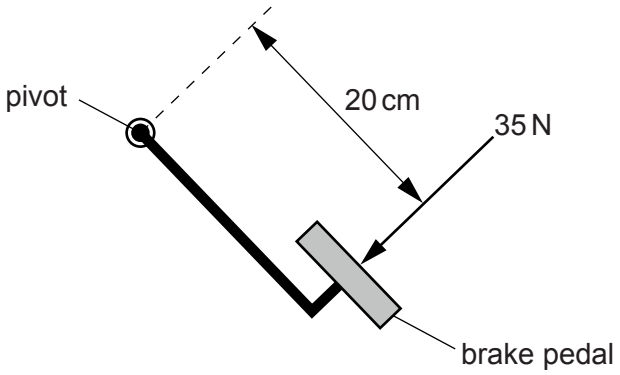

Fig. 3.2

Calculate the moment of the force about the pivot. Include the unit.

moment = ... unit ..... [4]

[Total: 9]

4 Electrical energy is provided to homes and industry from a coal-fired power station.

View solution

(a) The main stages in the operation of a coal-fired power station are listed below.

They are **not** in the correct order.

A The boiler produces steam.
B The turbine turns a generator.
C Thermal energy transfers to water in a boiler.
D Chemical energy in coal transfers to thermal energy.
E The generator produces electrical energy.
F Steam turns a turbine.
G Coal burns in a furnace.

Complete the flow chart to describe how a coal-fired power station works.

Insert the missing letters in the empty boxes.



[3]

(b) Some people are against the use of coal-fired power stations.

View solution

Give **two** environmental problems caused by coal-fired power stations.

1. .....

.....

2. .....

.....

[2]

(c) In the power station, a conveyor belt lifts coal from a coal supply to a furnace. An electric motor moves the conveyor belt. Fig. 4.1 shows this arrangement.

View solution

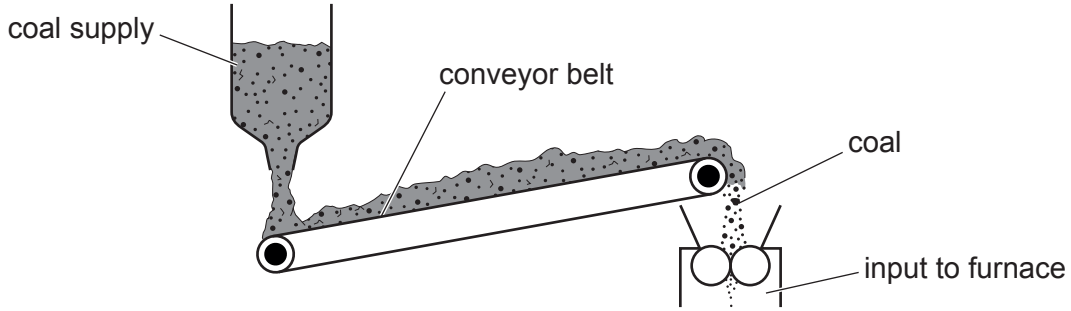

Fig. 4.1

The speed of the electric motor increases and the coal supply rate is increased. The conveyor belt lifts more coal each second. State the effect, if any, of increasing the motor speed on:

(i) the work done on each kilogram of coal

..... [1]

(ii) the output power of the motor.

..... [1]

[Total: 7]

View solution

5 Fig. 5.1 shows a steel container fitted with a liquid manometer. There is a gas in the container.

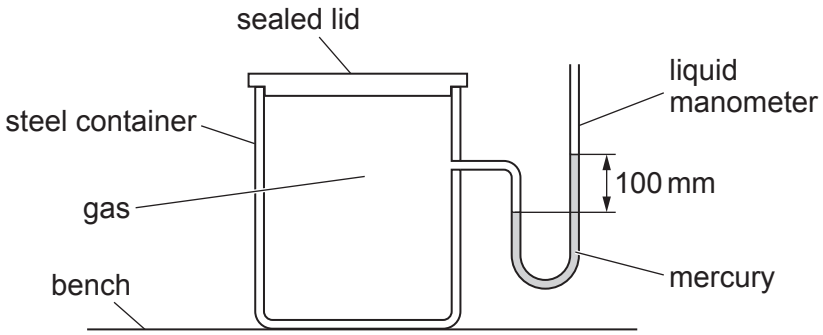

Fig. 5.1

(a) (i) The area of the steel container in contact with the bench is 80 cm^2. The total weight of the steel container and its contents is 60 N.

Calculate the pressure that the steel container exerts on the bench.

View solution

pressure on the bench = ... N/cm^2 [3]

(ii) Atmospheric pressure is equal to 760 mm of mercury (mm Hg).

Determine the pressure inside the container in mm Hg.

View solution

pressure = ... mm Hg [2]

(b) The temperature of the gas inside the steel container decreases.

State and explain how the pressure of the gas changes as the temperature of the gas decreases.

Use your ideas about molecules in your answer.

View solution

.....

.....

.....

.....

.....

..... [3]

[Total: 8]

6 **(a)** Fig. 6.1 represents three changes of state. Each pair of diagrams A, B and C shows the arrangement of molecules in a substance before and after it changes state.

View solution

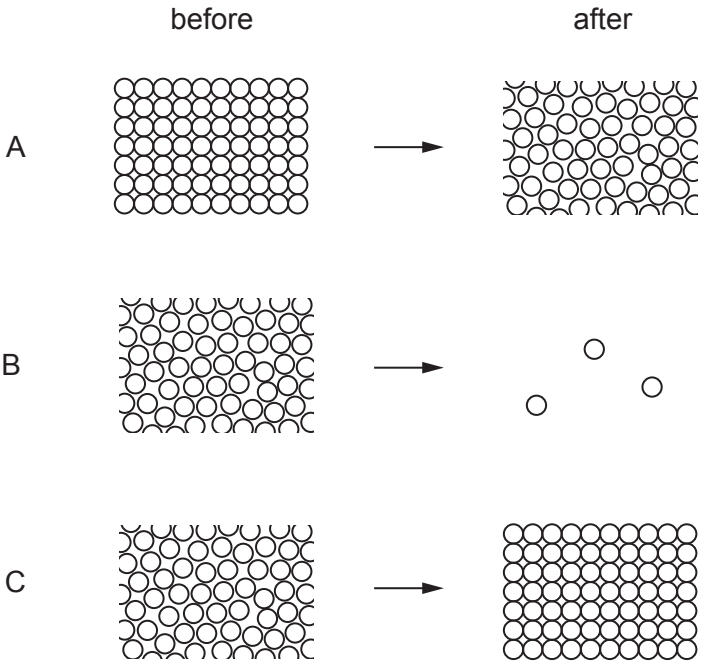

Fig. 6.1

Give the term used for each change of state.

A .....

B .....

C .....

[3]

© UCLES 2020

(b) A student attaches a liquid-in-glass thermometer to a ruler. The thermometer does **not** have a marked scale. Fig. 6.2 shows the arrangement.

View solution

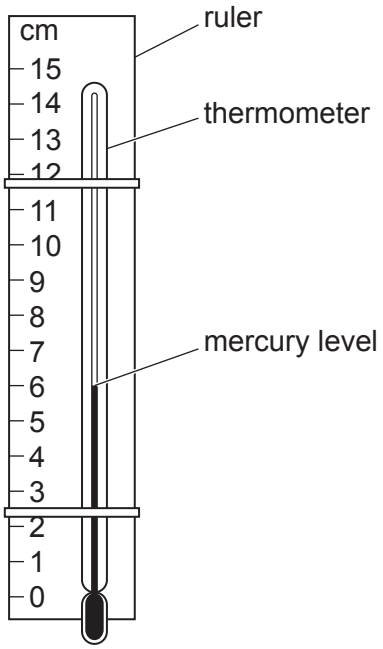

Fig. 6.2

The student places the thermometer in steam. The mercury rises to 11 cm on the ruler.

The student places the thermometer in melting ice. The mercury decreases to 1 cm on the ruler.

Determine the temperature indicated by the mercury level in Fig. 6.2.

temperature = ... °C [3]

[Total: 6]

© UCLES 2020

7 **(a)** Fig. 7.1 shows a ray of light incident on a plane mirror at point X.

View solution

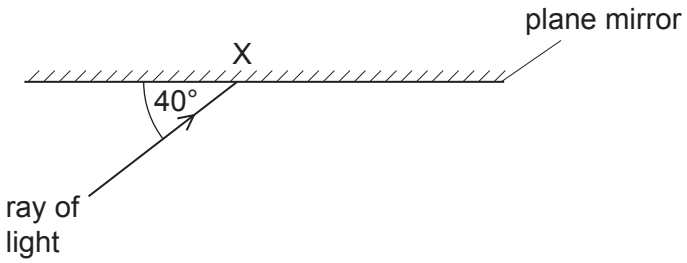

Fig. 7.1 (not to scale)

(i) Determine the value of the angle of reflection for the ray of light at point X.

..... [1]

(ii) On Fig. 7.1:

View solution

- draw the normal at point X and label the normal with the letter N
- draw the ray reflected from point X.

[2]

(b) Fig. 7.2 shows how a converging lens forms an image of an object.

View solution

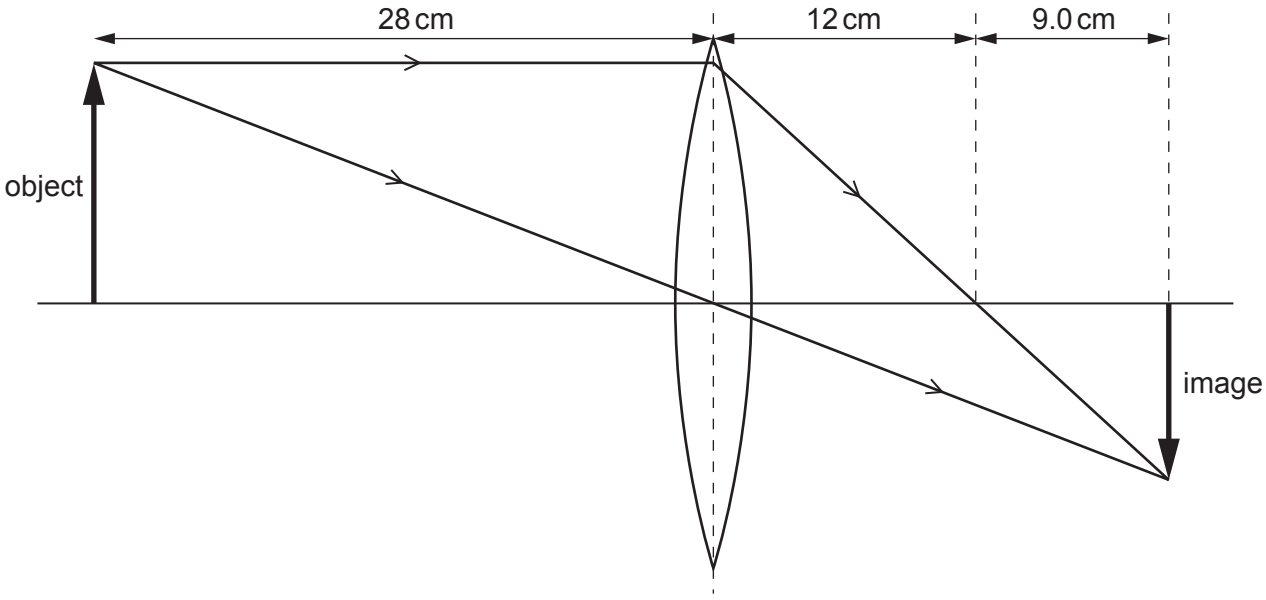

Fig. 7.2 (not to scale)

(i) Determine the focal length of the lens.

focal length = ... cm [1]

(ii) Determine the distance of the image from the lens.

View solution

distance = ... cm [1]

(iii) Describe the nature of the image formed by the lens in Fig. 7.2.

View solution

.....

.....

..... [2]

[Total: 7]

© UCLES 2020

8 Fig. 8.1 shows a mobile (cell) phone.



Fig. 8.1

(a) **(i)** State the type of electromagnetic wave used for the mobile phone signal.

View solution

..... [1]

(ii) The screen of the mobile phone emits visible light. State **one** type of electromagnetic wave with a shorter wavelength than visible light.

..... [1]

(b) The mobile phone produces sound waves.

View solution

(i) State the range of audible frequencies for a healthy human ear. Include the unit.

..... [2]

(ii) The ring tone of the mobile phone consists of two musical notes, note A and note B.

View solution

Note A is louder and is higher in pitch than note B.

Fig. 8.2 shows note A displayed on an oscilloscope screen.

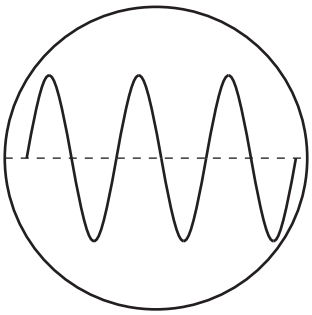

Fig. 8.2

Note B is displayed on the same oscilloscope screen as note A. Describe the differences between the wave for note B and the wave for note A. You may draw on Fig. 8.2 to show the differences.

.....

..... [2]

[Total: 6]

9 A student has a permanent bar magnet and two metal bars, as shown in Fig. 9.1.

View solution

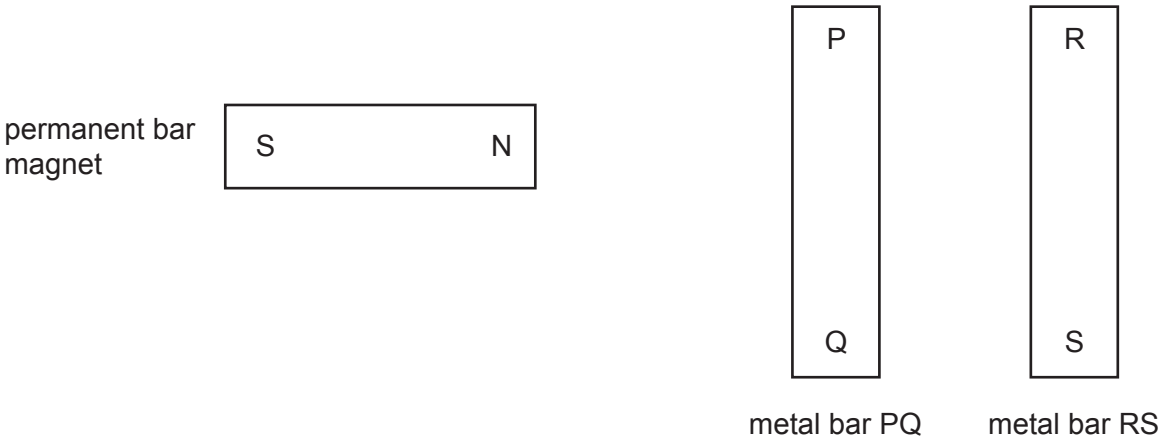

Fig. 9.1

The student tests bar PQ and bar RS separately. He holds the N pole of the permanent bar magnet close to each end of each metal bar. Table 9.1 shows the results of the tests.

Table 9.1

end of metal bar	result of test with N pole
P	attracted
Q	repelled
R	attracted
S	attracted

Deduce whether each metal bar is a magnet, an unmagnetised magnetic material or a non-magnetic material.

Give a reason for each of your answers.

1. metal bar PQ .....

.....

.....

2. metal bar RS .....

.....

.....

[4]

[Total: 4]

© UCLES 2020

10 A student determines the resistance of a piece of metal wire XY.
Fig. 10.1 shows the wire connected in the circuit.

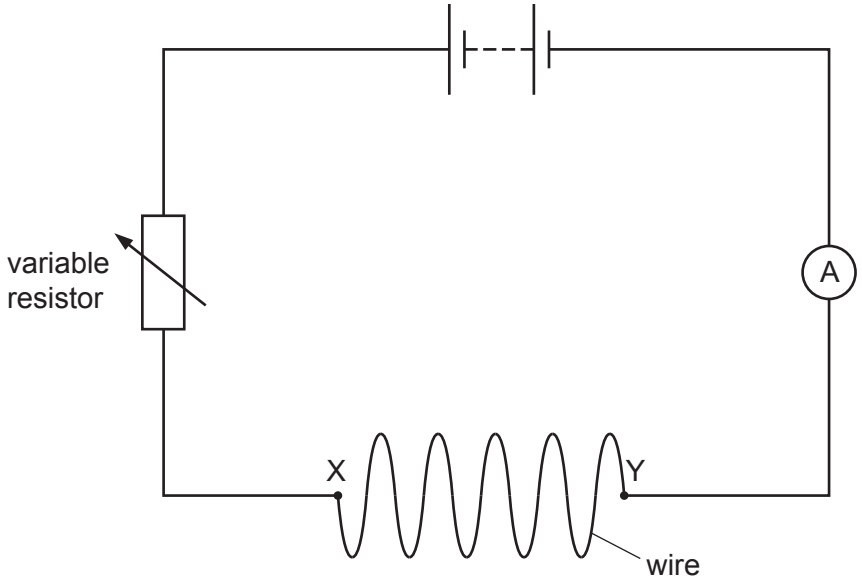

Fig. 10.1

(a) (i) The student measures the potential difference (p.d.) across the wire XY.
On Fig. 10.1, show the voltmeter correctly connected. Use the correct symbol. [1]

(ii) There is a current in the wire. State the name of the particles that flow through the wire.

..... [1]

(iii) The student removes wire XY and replaces it with another wire CD. Wire CD is the same length and is made of the same material as wire XY, but thinner.

State any difference between the current in wire CD and the current in wire XY. Explain your answer.

.....

.....

..... [2]

(iv) State the unit used for the electromotive force (e.m.f.) of the battery.

..... [1]

View solution

(b) (i) The resistance of wire CD is 8.7 Ω and the resistance of the variable resistor is 7.4 Ω.

View solution

Determine the combined resistance of the wire CD and the variable resistor.

resistance = ... Ω [1]

(ii) The current in the variable resistor is 0.40 A.

View solution

State the current in wire CD.

current = ... A [1]

[Total: 7]

11 **(a)** Fig. 11.1 represents the particles in a neutral lithium atom.

View solution

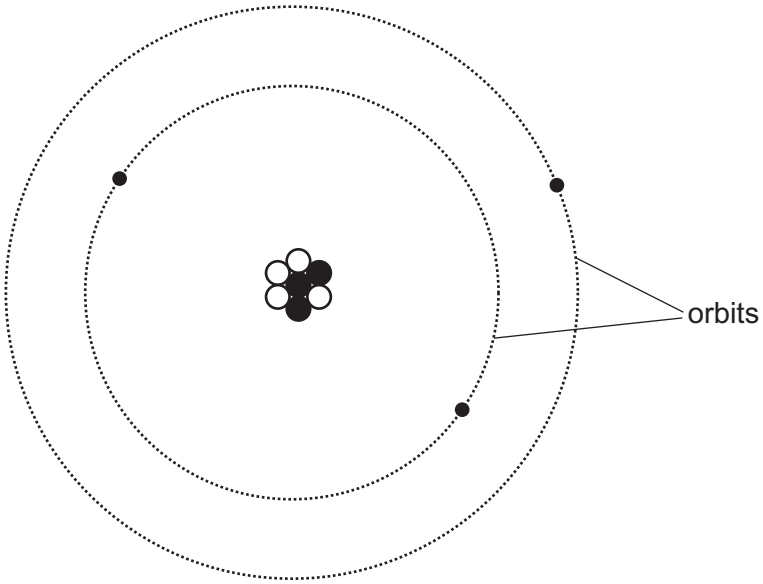

Fig. 11.1

Use the information in Fig. 11.1 about the lithium atom to answer **(a)(i)**, **(a)(ii)** and **(a)(iii)**.

(i) Determine the number of electrons. ..... [1]

(ii) Determine the value of the nucleon number. ..... [1]

(iii) Determine the number of neutrons. ..... [1]

(b) The count rate of a radioactive sample is 2400 counts per minute at 10 am on one day. The half-life of the sample is two days.

View solution

Predict the count rate at 10 am four days later.

count rate = ... counts per minute [3]

[Total: 6]

© UCLES 2020

12 **(a)** Fig. 12.1 shows two circuits, A and B, linked by a relay.

View solution

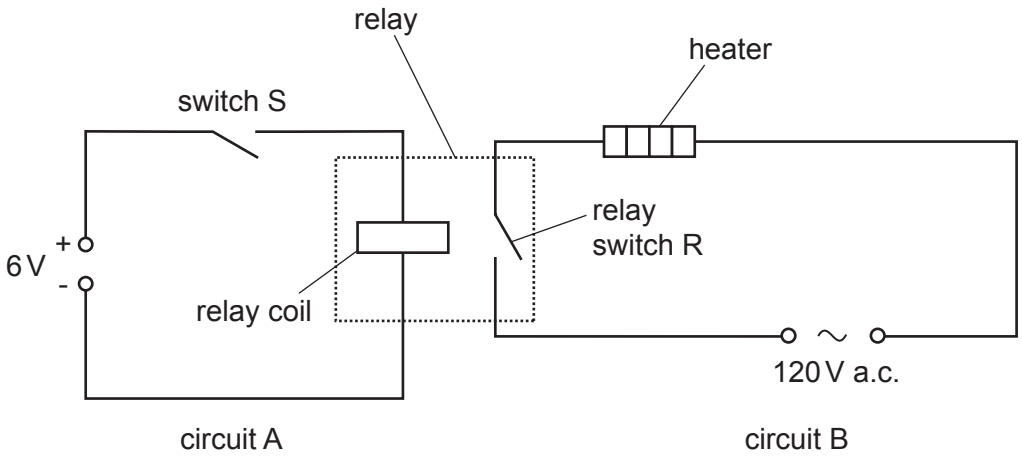

Fig. 12.1

Describe what happens in the two circuits when switch S is closed.

.....

.....

.....

.....

..... [3]

(b) Another circuit includes a transformer. The input voltage of the transformer is 120 V a.c. The input coil has 480 turns of wire and the output coil has 60 turns of wire.

View solution

Calculate the output voltage of the transformer.

output voltage = ... V [3]

[Total: 6]

Permission to reproduce items where third-party owned material protected by copyright is included has been sought and cleared where possible. Every reasonable effort has been made by the publisher (UCLES) to trace copyright holders, but if any items requiring clearance have unwittingly been included, the publisher will be pleased to make amends at the earliest possible opportunity.

To avoid the issue of disclosure of answer-related information to candidates, all copyright acknowledgements are reproduced online in the Cambridge Assessment International Education Copyright Acknowledgements Booklet. This is produced for each series of examinations and is freely available to download at www.cambridgeinternational.org after the live examination series.

Cambridge Assessment International Education is part of the Cambridge Assessment Group. Cambridge Assessment is the brand name of the University of Cambridge Local Examinations Syndicate (UCLES), which itself is a department of the University of Cambridge.

© UCLES 2020