Cambridge Assessment International Education

Cambridge IGCSE™

CANDIDATE NAME									
CENTRE NUMBER						CANDIDATE NUMBER			

PHYSICS **0625/32**

Paper 3 Theory (Core) **October/November 2020**

1 hour 15 minutes

You must answer on the question paper.

No additional materials are needed.

INSTRUCTIONS

- Answer **all** questions.
- Use a black or dark blue pen. You may use an HB pencil for any diagrams or graphs.
- Write your name, centre number and candidate number in the boxes at the top of the page.
- Write your answer to each question in the space provided.
- Do **not** use an erasable pen or correction fluid.
- Do **not** write on any bar codes.
- You may use a calculator.
- You should show all your working and use appropriate units.
- Take the weight of 1.0 kg to be 10 N (acceleration of free fall = 10 m / s^2).

INFORMATION

- The total mark for this paper is 80.
- The number of marks for each question or part question is shown in brackets [ ].

This document has **16** pages. Blank pages are indicated.

© UCLES 2020

1 Fig. 1.1 shows a box attached to a parachute. The box and the parachute are falling through the air.

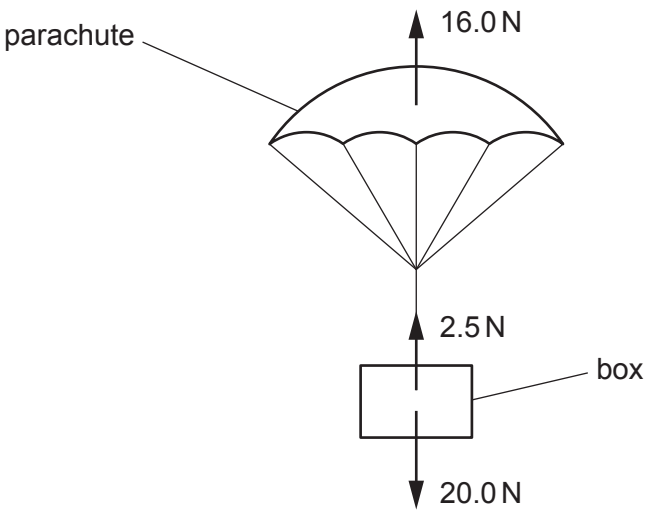

Fig. 1.1

View solution

(a) Fig. 1.1 shows **three** vertical forces acting on the box and the parachute.

(i) Calculate the resultant vertical force and state its direction.

resultant vertical force = ... N

direction .....

[3]

(ii) Suggest and explain what happens to the size of the upward vertical force on the parachute if the area of the parachute used is increased.

suggestion .....

explanation .....

.....

[2]

View solution

(b) Fig. 1.2 shows the speed–time graph for the box **before** the parachute is opened.

View solution

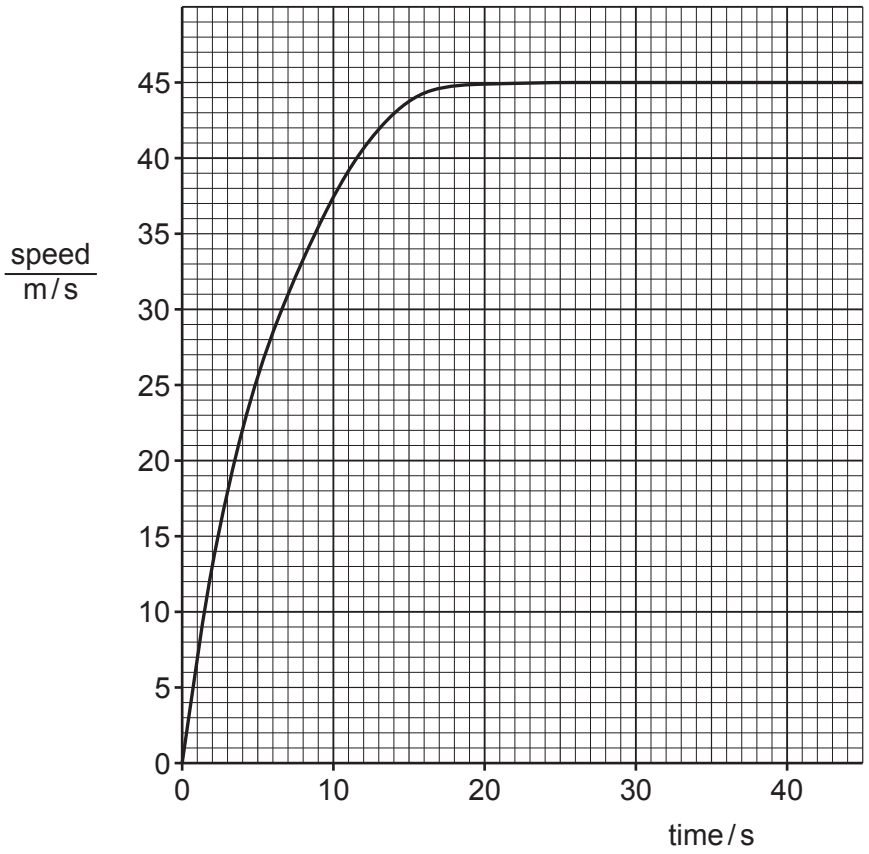

Fig. 1.2

(i) Determine the time when the speed of the box is 30 m / s.

time = ... s [1]

(ii) Deduce the size of the resultant vertical force on the box when the time is 35 s. Explain your answer.

size of resultant vertical force .....

explanation .....

.....

[2]

(iii) Calculate the distance the box moves between time = 30 s and time = 40 s.

distance = ... m [3]

[Total: 11]

© UCLES 2020

2 A car driver needs to remove one of the wheels on his car. He puts a spanner on a wheel nut.

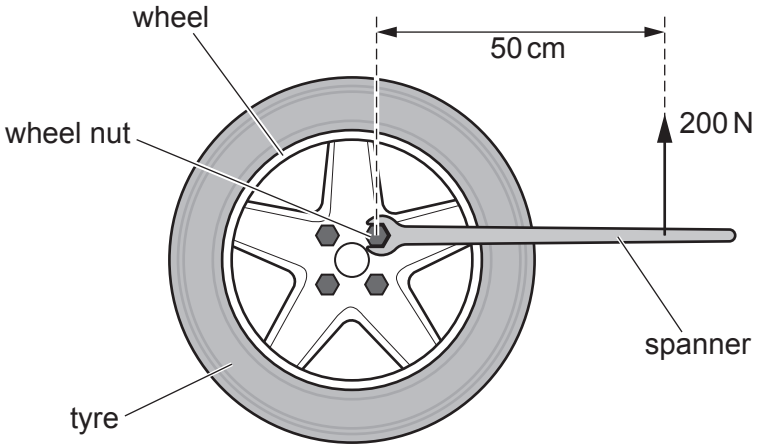

Fig. 2.1

View solution

(a) The driver applies a force of 200 N, as shown in Fig. 2.1.

Calculate the moment of the 200 N force about the centre of the wheel nut.

moment of force = ... N cm [3]

(b) The moment in **(a)** does not release the wheel nut. The driver **cannot** increase the force but can increase its moment.

View solution

State and explain how the driver can increase the moment of the force.

statement .....

explanation .....

.....

[2]

(c) The driver releases a second wheel nut in a shorter time than the first wheel nut. The driver uses the same amount of energy in releasing both wheel nuts.

less than	the same as	greater than

Complete the sentences using the phrases in the box. Each phrase may be used once, more than once or not at all.

The work done in releasing the second wheel nut is ..... the work done in releasing the first wheel nut.

The power produced in releasing the second wheel nut is ..... the power produced in releasing the first wheel nut.

View solution [2]

[Total: 7]

© UCLES 2020

3 Fig. 3.1 shows a mercury barometer.

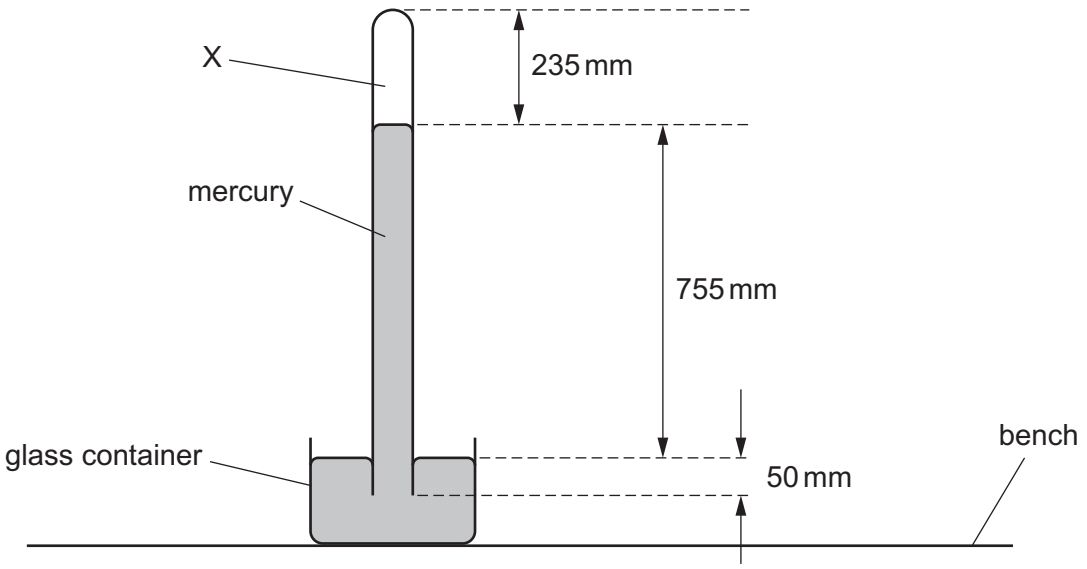

Fig. 3.1

(a) **(i)** Determine the atmospheric pressure indicated by the barometer. Include the unit.

View solution

atmospheric pressure = ... unit .....

[2]

(ii) State what is in the space labelled X above the mercury in the tube.

View solution

..... [1]

(b) The total weight of the mercury barometer is 38 N.
The area of the glass container in contact with the bench is 200 cm^2.

View solution

Calculate the pressure of the mercury barometer on the bench.

pressure = ... N/cm^2 [3]

[Total: 6]

© UCLES 2020

4 A rigid container is filled with a gas.

(a) Describe the movement and arrangement of the gas molecules in the container.

View solution

.....

.....

..... [3]

(b) The gas in the container is heated. The volume of the gas does **not** change.

State and explain the change in pressure of the gas as the temperature of the gas increases. Use your ideas about molecules in your answer.

.....

.....

.....

..... [3]

[Total: 6]

View solution

5 A beaker contains water. Some of the water evaporates.

(a) Describe and explain how the water evaporates. Use your ideas about molecules.

View solution

.....

.....

..... [2]

(b) Evaporation changes the temperature of the water that remains in the beaker.

View solution

State and explain the change in temperature of the water due to evaporation.

.....

.....

..... [3]

[Total: 5]

6 Fig. 6.1 shows equipment used to demonstrate convection in air. A burning candle is placed beneath glass tube A.

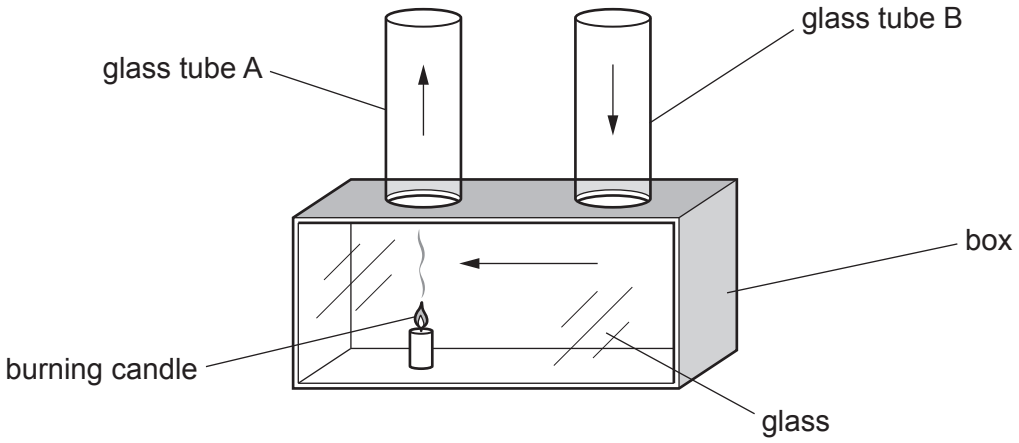

Fig. 6.1

(a) The arrows in Fig. 6.1 show the directions in which air moves.

View solution

Explain why the air moves as shown in Fig. 6.1.

.....

.....

.....

..... [3]

(b) A student has four rods of identical size. The rods are made of copper, brass, iron and glass.

Describe an experiment to compare thermal conduction along the rods.

View solution

You may draw a labelled diagram to help with your answer.

.....

.....

.....

.....

.....

..... [3]

[Total: 6]

© UCLES 2020

7 A teacher uses a long spring to demonstrate wave motion. She makes a wave move along the coils of the spring.
Fig. 7.1 shows the wave on the spring.

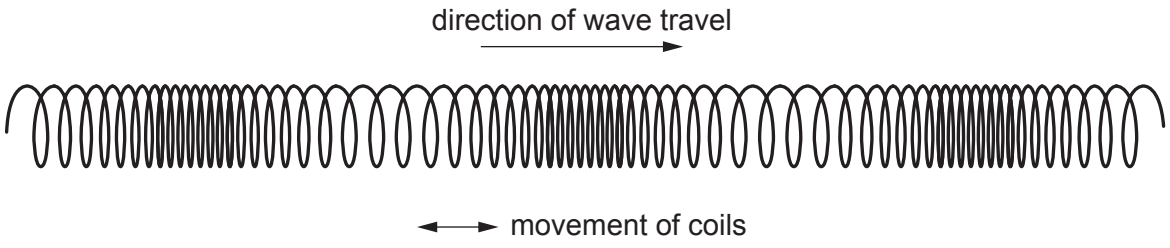

Fig. 7.1

(a) Explain why the type of wave in Fig. 7.1 is a longitudinal wave.

View solution

.....

..... [2]

(b) Measure the wavelength of the wave shown in Fig. 7.1.

View solution

wavelength = ... cm [1]

(c) State what is meant by the frequency of a wave.

View solution

.....

..... [2]

(d) The wave in Fig. 7.1 travels 25 cm in 0.20 s.

View solution

Calculate the speed of the wave.

speed = ... cm / s [3]

[Total: 8]

© UCLES 2020

8 Fig. 8.1 shows a converging lens and an object. The side of each square represents 0.5 cm.

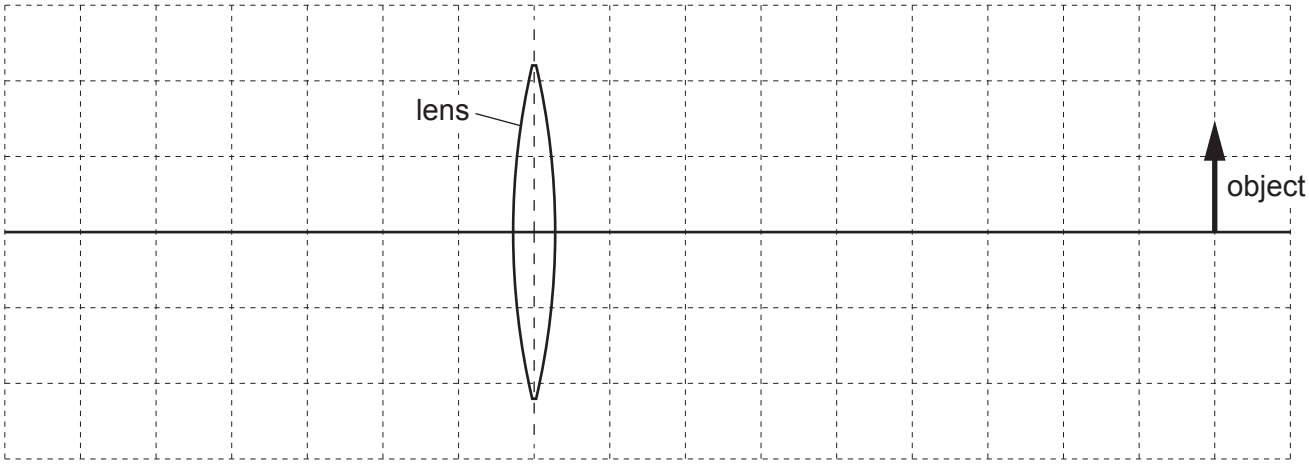

Fig. 8.1

(a) Using Fig. 8.1, determine the distance of the object from the centre of the lens.

View solution

distance = ... cm [2]

(b) Fig. 8.2 shows another lens forming the image IY of object OP.

View solution

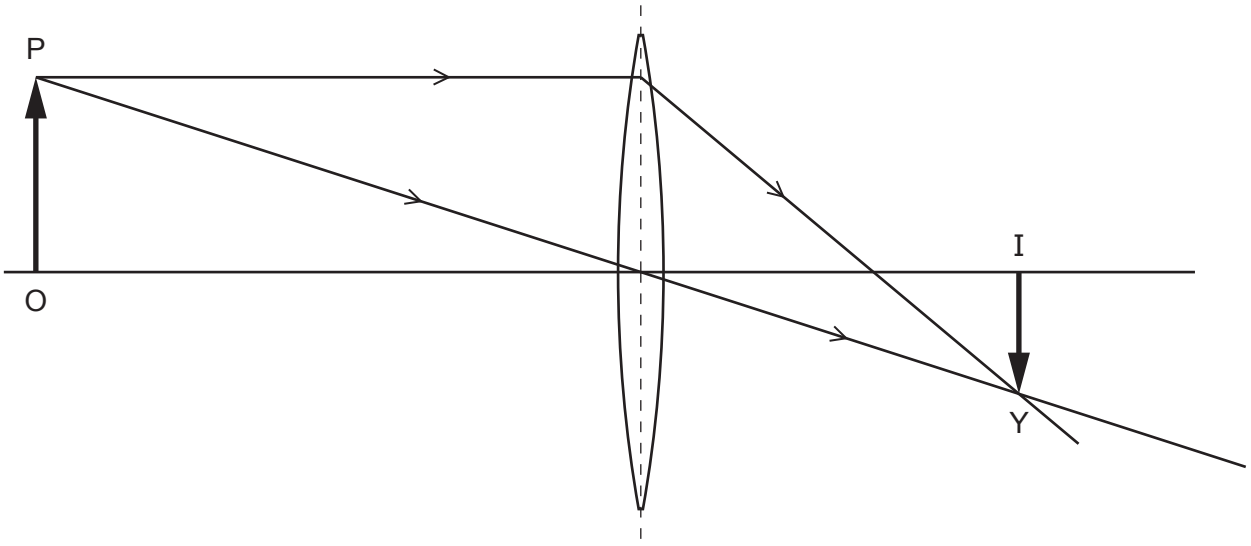

Fig. 8.2

(i) On Fig. 8.2, draw an arrow to represent the focal length of the lens. Label this arrow f. [2]

(ii) Circle **two** words or phrases from those shown to describe the image formed in Fig. 8.2.

enlarged **upright** **inverted** **same size** **diminished** [2]

[Total: 6]

© UCLES 2020

9 A student tests whether a bar magnet affects three different materials.

Fig. 9.1 shows the bar magnet and a sample of each material A, B and C.

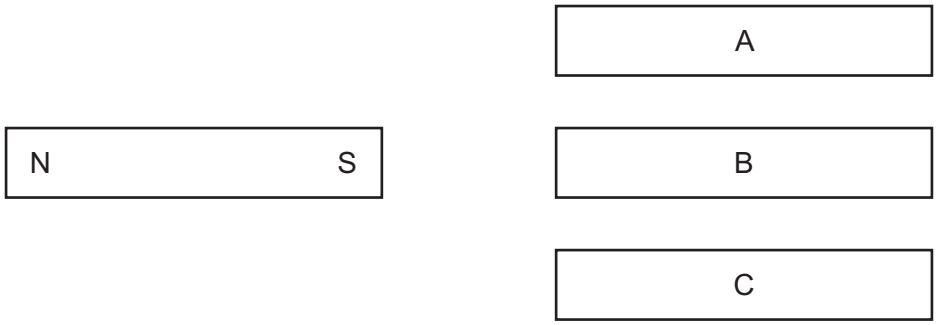

Fig. 9.1

The student tests each sample by holding each pole of the magnet close to one end of the sample. Table 9.1 shows his observations.

Table 9.1

sample	effect of N pole	effect of S pole
A	attraction	attraction
B	no effect	no effect
C	attraction	repulsion

(a) Using the information in Table 9.1, draw a straight line from each sample to its correct property. Draw **three** lines.

View solution

sample	**property**
A	magnetic and magnetised
B	magnetic but not magnetised
C	non-magnetic

[2]

(b) Describe **one** method of producing a magnet from a bar of unmagnetised steel.

View solution

.....

.....

..... [2]

(c) Another student does an experiment with some electrostatically charged plastic rods.

View solution

Fig. 9.2 shows the student's arrangement.

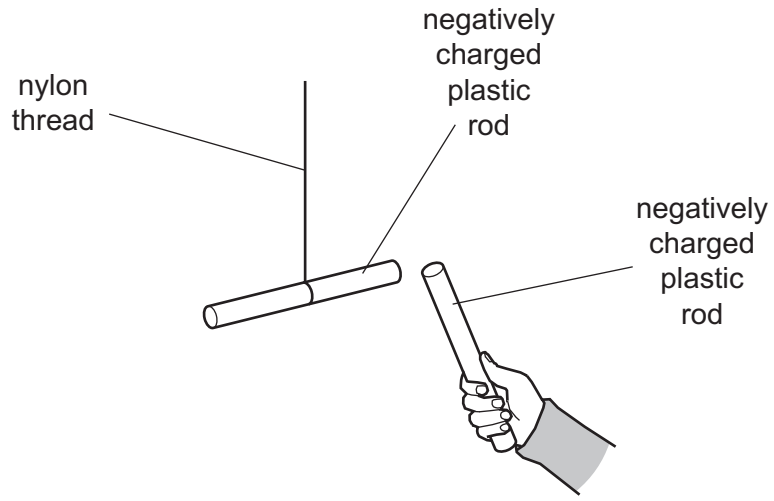

Fig. 9.2

Describe and explain what happens as the student brings one negatively charged rod close to the other negatively charged rod.

.....

.....

..... [2]

[Total: 6]

10 Fig. 10.1 shows a metal kettle used for heating water. The kettle is connected to the mains power supply. The metal case is connected to earth. A fault causes the live wire to come loose and touch the metal case, as shown.

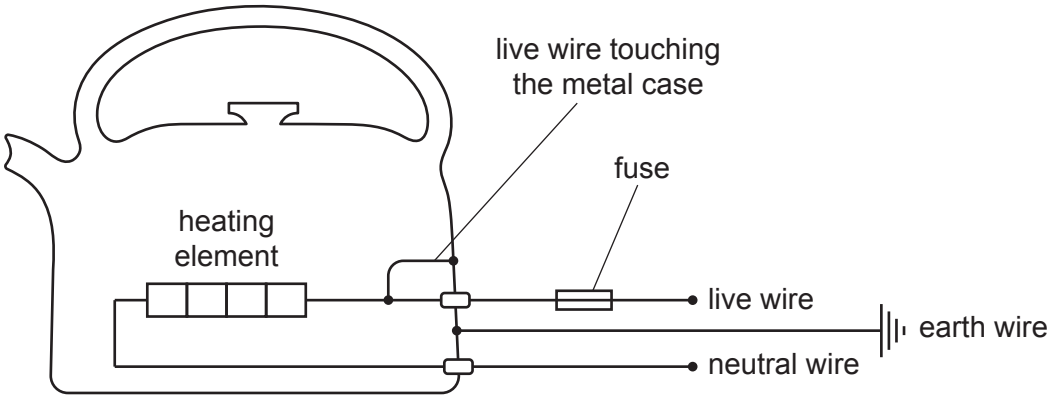

Fig. 10.1

(a) **(i)** The kettle is switched on. There is a very large electric current in the live wire.

View solution

Explain why this large electric current can be dangerous.

.....

..... [1]

(ii) Explain how a fuse helps to protect against the danger of a large electric current.

.....

.....

..... [2]

(iii) Explain why the kettle is **not** safe to use with the fuse connected into the neutral wire instead of the live wire.

.....

..... [1]

(b) The current in a device when operating normally is 3.1 A.

View solution

State a suitable value for the fuse.

Choose **one** of these values: 3A, 5A, 10A and 13A.

..... [1]

© UCLES 2020

(c) A small kettle has a potential difference (p.d.) of 12 V (d.c.) across its heating element. The current in the heating element is 2.5 A.

View solution

Calculate the resistance of the heating element.

resistance of the heating element = ... Ω [3]

[Total: 8]

11 Fig. 11.1 represents a transformer. The primary coil has 300 turns and the secondary coil has 30 turns. The input voltage is 230 V a.c.

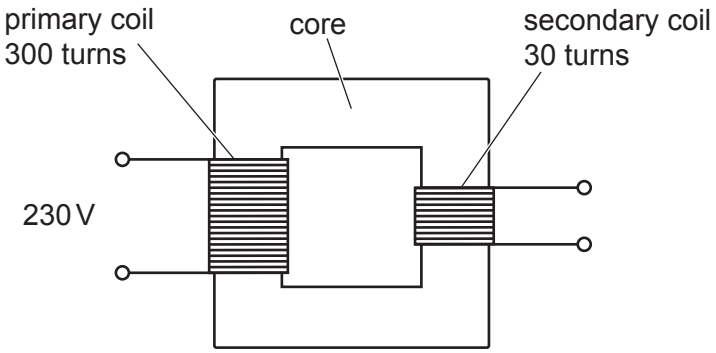

Fig. 11.1

(a) Calculate the voltage across the secondary coil.

View solution

voltage = ... V [3]

(b) State a suitable material for the core of the transformer.

View solution

..... [1]

(c) Some transformers produce high electrical voltage for the transmission of electrical energy. Describe **two** advantages of high-voltage transmission.

1. .....

.....

2. .....

.....

[2]

[Total: 6]

View solution

12 A teacher is investigating radioactivity.

The teacher measures the background radiation in the laboratory.

(a) State **one** source of background radiation.

View solution

..... [1]

(b) A teacher measures the count rate of a radioactive isotope.

View solution

Fig. 12.1 shows the graph of her results.

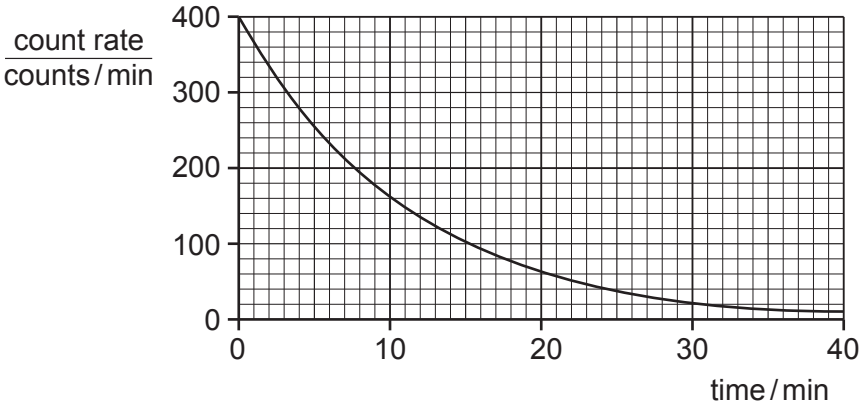

Fig. 12.1

(i) Determine the half-life of the radioactive isotope. Use information from Fig. 12.1.

Show on Fig. 12.1 how you obtained your value.

half-life = ... minutes
[3]

(ii) The radioactive isotope emits γ-radiation.

View solution

Describe **one** method of safely storing the radioactive isotope.

.....

..... [1]

[Total: 5]

Permission to reproduce items where third-party owned material protected by copyright is included has been sought and cleared where possible. Every reasonable effort has been made by the publisher (UCLES) to trace copyright holders, but if any items requiring clearance have unwittingly been included, the publisher will be pleased to make amends at the earliest possible opportunity.

To avoid the issue of disclosure of answer-related information to candidates, all copyright acknowledgements are reproduced online in the Cambridge Assessment International Education Copyright Acknowledgements Booklet. This is produced for each series of examinations and is freely available to download at www.cambridgeinternational.org after the live examination series.

Cambridge Assessment International Education is part of the Cambridge Assessment Group. Cambridge Assessment is the brand name of the University of Cambridge Local Examinations Syndicate (UCLES), which itself is a department of the University of Cambridge.

© UCLES 2020