Cambridge Assessment International Education

Cambridge IGCSE™

CANDIDATE NAME									
CENTRE NUMBER						CANDIDATE NUMBER			

PHYSICS **0625/33**

Paper 3 Theory (Core) **October/November 2020**

1 hour 15 minutes

You must answer on the question paper.

No additional materials are needed.

INSTRUCTIONS

- Answer **all** questions.
- Use a black or dark blue pen. You may use an HB pencil for any diagrams or graphs.
- Write your name, centre number and candidate number in the boxes at the top of the page.
- Write your answer to each question in the space provided.
- Do **not** use an erasable pen or correction fluid.
- Do **not** write on any bar codes.
- You may use a calculator.
- You should show all your working and use appropriate units.
- Take the weight of 1.0 kg to be 10 N (acceleration of free fall = 10 m / s^2).

INFORMATION

- The total mark for this paper is 80.
- The number of marks for each question or part question is shown in brackets [ ].

This document has **20** pages. Blank pages are indicated.

© UCLES 2020

1 **(a)** Fig. 1.1 shows a lorry moving on a straight road. The arrows represent the horizontal forces acting on the lorry. These forces act along the same straight line.

View solution

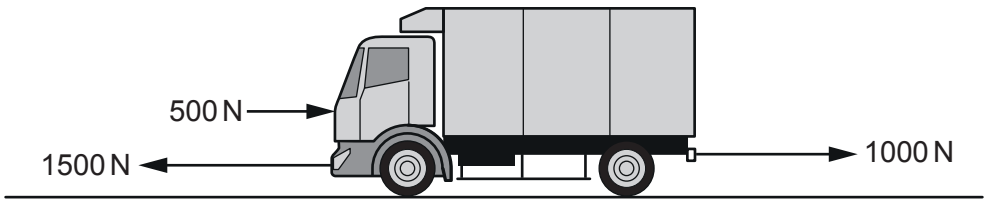

Fig. 1.1

(i) Calculate the size of the resultant horizontal force on the lorry.

size of resultant force = ... N [2]

(ii) Describe the effect of a horizontal resultant force of zero on the speed of the lorry.

View solution

Put a tick (✓) in **one** box.

- ☐ speed increases to a higher constant speed
- ☐ speed stays the same
- ☐ speed decreases to a lower constant speed
- ☐ speed decreases to zero

[1]

(b) The speed of the motorcycle in Fig. 1.2 is 20 m / s.

View solution

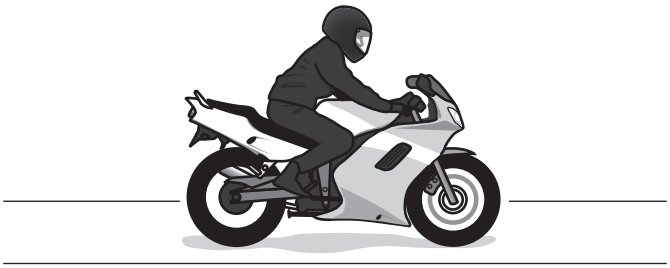

Fig. 1.2

The rider reacts to a sudden change in the traffic ahead.
He stops as quickly as possible by applying the brakes.
The total stopping distance is made up of the distance travelled while the rider is reacting and the distance travelled when the brakes are applied.

Fig. 1.3 shows information about stopping when the speed of the motorcycle is 20 m / s.

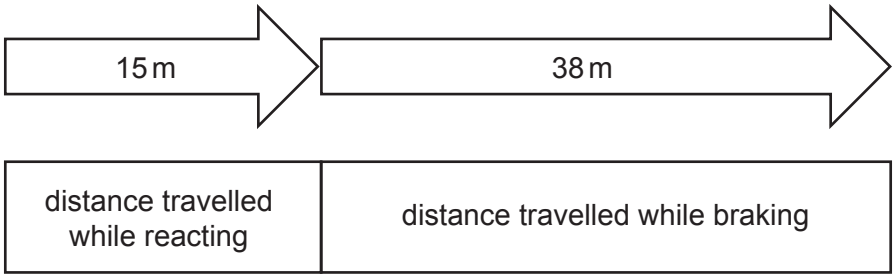

Fig. 1.3

(i) Calculate the total stopping distance when the speed of the motorcycle is 20 m / s.

total stopping distance = ... m [1]

(ii) Suggest **one** factor that could increase the total stopping distance.

..... [1]

[Total: 5]

View solution

2 **(a)** Fig. 2.1 shows two children sitting on a see-saw.

View solution

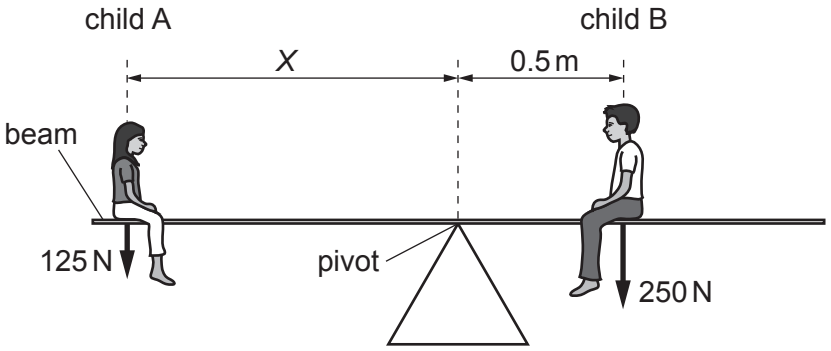

Fig. 2.1 (not to scale)

(i) The weight of child A is 125 N.

Calculate the mass of child A. Include the unit in your answer.

mass of child A = ... unit ..... [3]

(ii) Fig. 2.1 shows child A and child B sitting in positions which balance the see-saw horizontally.

View solution

Using the information in Fig. 2.1, determine the distance *X*.

distance *X* = ... m [3]

(b) The person in Fig. 2.2 is pushing a child on a swing.

View solution

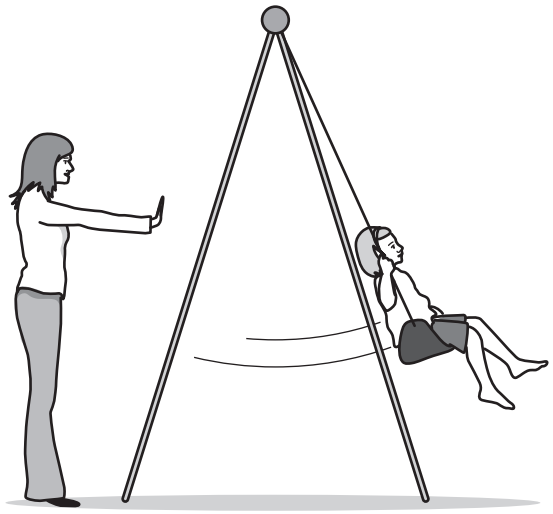

Fig. 2.2

State the name of the force that acts against the motion of the swing.

..... [1]

[Total: 7]

3 **(a)** A man lifts 40 blocks onto a platform, as shown in Fig. 3.1.

View solution

He lifts 10 blocks at once and does this four times.

A machine can lift 40 blocks at once onto the same platform, as shown in Fig. 3.2.

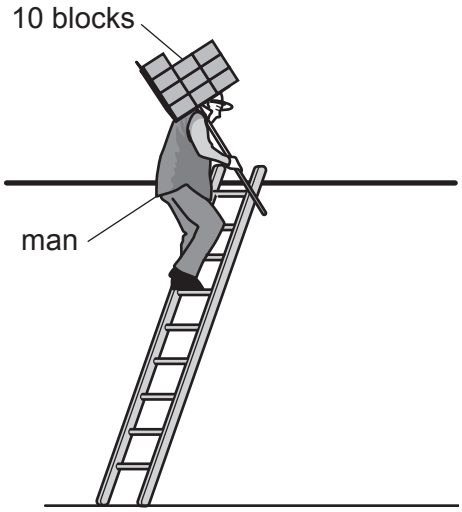

Fig. 3.1

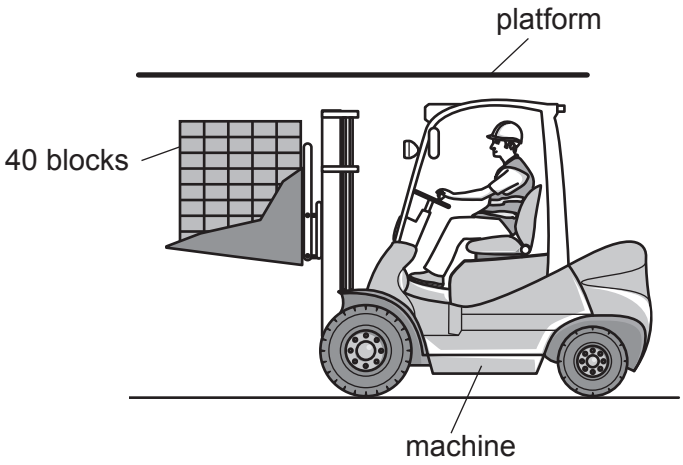

Fig. 3.2

(i) State the term used for energy gained by the blocks when they are lifted onto the platform.

..... [1]

(ii) State how the energy gained by 40 blocks when lifted by the man compares with the energy gained by 40 blocks when lifted by the machine.

.....

..... [1]

(b) Here are descriptions of four situations.

View solution

Indicate the situations in which work is done.

Put a tick (✓) in each correct box.

A child is sitting at the top of the stairs.	
A picture is hanging on a wall.	
A student is stretching a spring.	
A person is moving a chair.	

[1]

(c) Electrical appliances transfer energy. Some of the energy transferred is useful.

View solution

Draw a line from each electrical appliance to the correct useful energy output.

Only draw **three** lines.

electrical appliance	useful energy output
 torch	sound
 radio	light
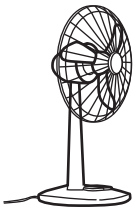 electric fan	chemical
	kinetic

[3]

[Total: 6]

4 **(a)** Some vehicles have wide tyres so that they can drive over soft mud.

View solution

Explain why the wide tyres enable these vehicles to drive over soft mud.

.....

.....

.....

..... [3]

(b) Fig. 4.1 shows a mercury barometer.

View solution

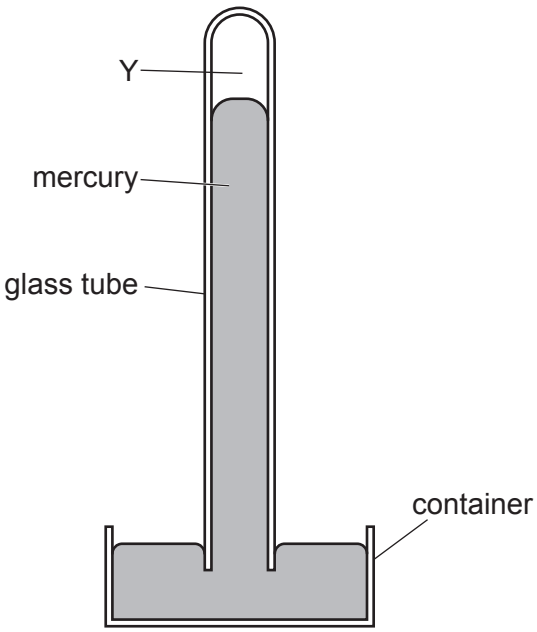

Fig. 4.1

(i) State what is in the space at Y above the mercury.

..... [1]

(ii) Complete the following statement to describe the use of a mercury barometer.

View solution

A mercury barometer measures .....

..... [2]

(c) The diagram in Fig. 4.2 shows a tall can containing water.

The can has three identical holes 1, 2 and 3 on one side, one above the other in a vertical line, as shown in Fig. 4.2.

View solution

Water is shown flowing out of hole 2 and hole 3.

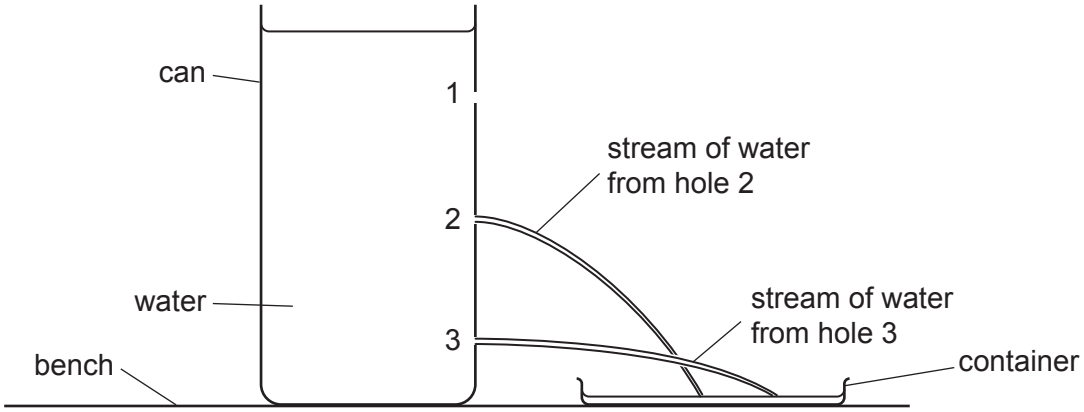

Fig. 4.2

(i) State how the pressure of the water at hole 2 compares with the pressure of the water at hole 3.

..... [1]

(ii) Draw on Fig. 4.2 to show the stream of water flowing from hole 1. [1]

[Total: 8]

View solution

5 **(a)** Fig. 5.1 shows diagrams of the arrangement of molecules in three states of matter and shows descriptions of how the molecules move.

View solution

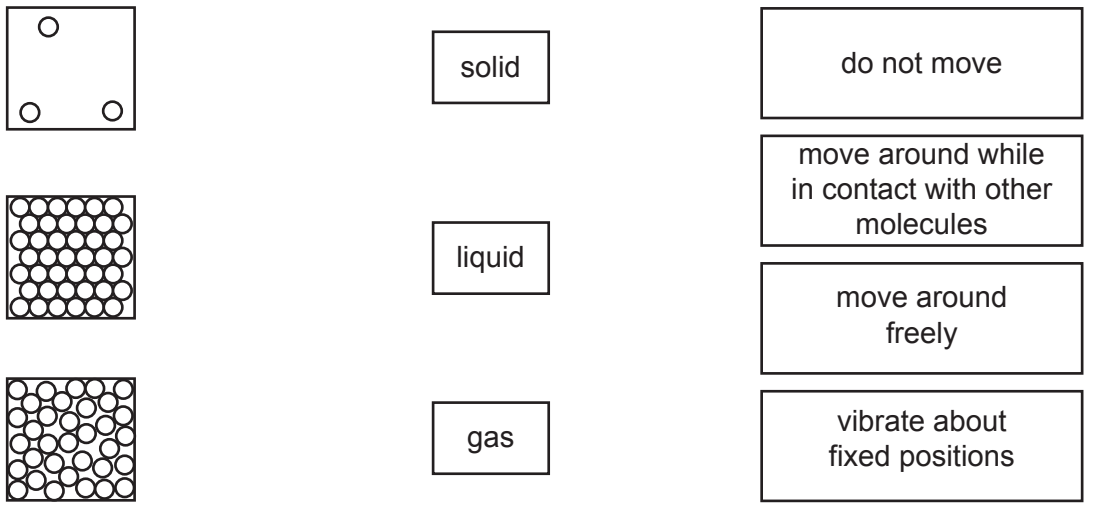

Fig. 5.1

On Fig. 5.1, draw a line:

- from each arrangement of molecules to the correct state of matter
- from the state of matter to the correct description of the movement of molecules.

[4]

(b) A bicycle tyre contains air. The tyre is sealed and does not leak.

View solution

The temperature of the air in the tyre increases by 20 °C. The volume of the tyre does **not** change.

(i) State how the increase in temperature affects the motion of the air molecules in the tyre.

..... [1]

(ii) State how the increase in temperature changes the pressure of the air in the tyre.

..... [1]

View solution

(c) Fig. 5.2 shows a liquid-in-glass thermometer.

View solution

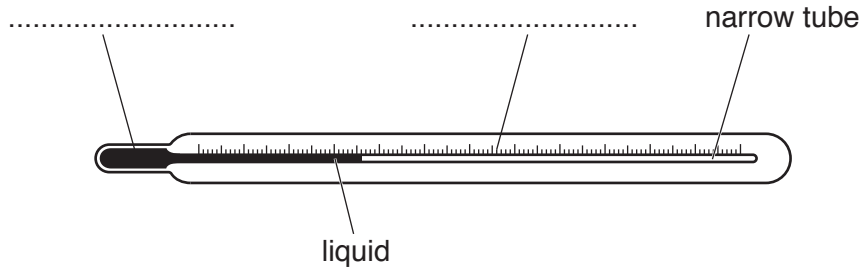

Fig. 5.2

(i) Add the missing labels to Fig. 5.2. [2]

(ii) The thermometer in Fig. 5.2 is designed to measure a range of temperatures from 0 °C to 100 °C.

View solution

State the name of a suitable liquid for use in this thermometer.

..... [1]

(iii) Describe and explain the changes in the thermometer in Fig. 5.2 when the temperature of the liquid increases.

.....

.....

..... [2]

[Total: 11]

View solution

6 **(a)** Fig. 6.1 shows an electric kettle containing cold water.

View solution

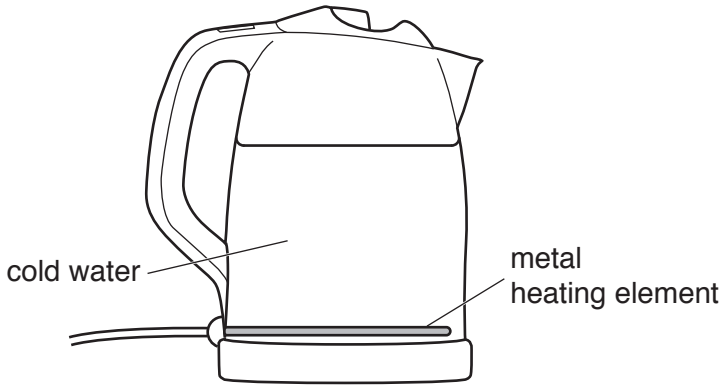

Fig. 6.1

The metal heating element heats the water.

Explain how thermal energy from the heating element is transferred to all the water in the kettle.

.....

.....

.....

.....

.....

..... [4]

(b) Fig. 6.2 shows two similar metal cans. The only difference is the surface. Can A has a dull black surface and can B has a shiny white surface.

View solution

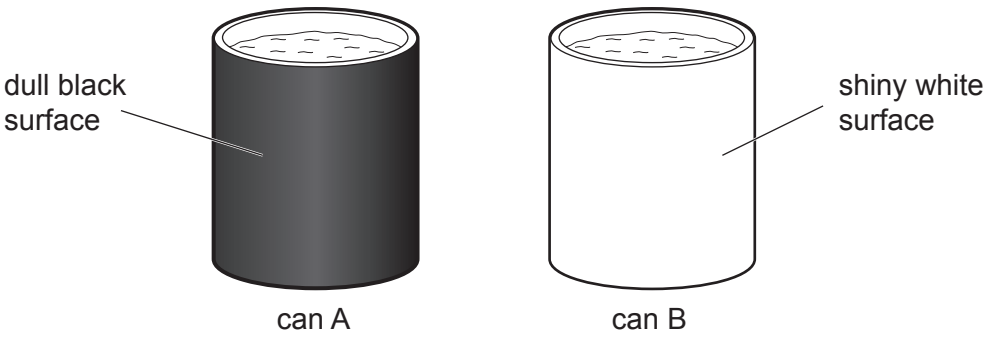

Fig. 6.2

(i) A student fills each can with hot water. The initial temperature of the water is 85 °C.

The student records the temperature of the water in each can every 30 seconds for 10 minutes.

Suggest which can of water will cool more quickly. Give a reason for your answer.

suggestion .....

reason .....

.....

[2]

(ii) Suggest and explain **two** changes to can B that reduce thermal energy loss to the surroundings.

change 1 .....

.....

.....

change 2 .....

.....

.....

[4]

[Total: 10]

View solution

7 **(a)** Complete the following sentences about light.

View solution

Use words from the list.

atomic **blue** **three** **electromagnetic**

electronic **violet** **five** **red** **seven**

Light is part of a spectrum of radiation called the ..... spectrum.

A glass prism disperses white light into ..... colours.

The colour of light that is refracted least is ..... .

[3]

(b) Fig. 7.1 shows light reflected by a plane mirror.

View solution

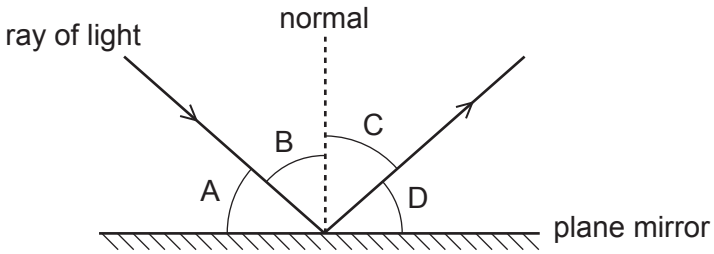

Fig. 7.1

(i) State which angle A, B, C or D is the angle of incidence. ..... [1]

(ii) State which angle A, B, C or D is the angle of reflection. ..... [1]

[Total: 5]

View solution

8 **(a)** Fig. 8.1 shows the electrical symbols for some circuit components.

View solution

Identify the circuit component for each electrical symbol.

Draw a line from each electrical symbol to the name of the circuit component.

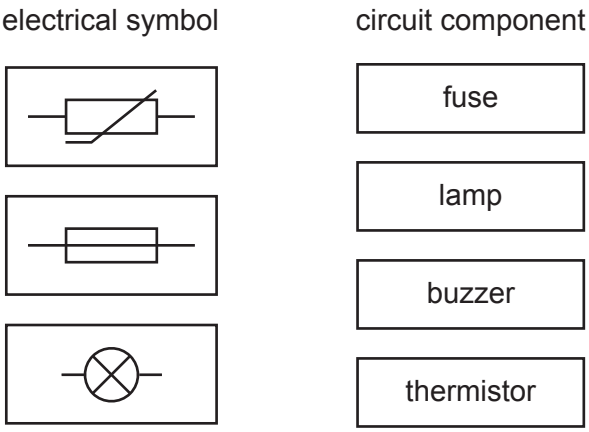

Fig. 8.1

[3]

(b) A student connects the circuit shown in Fig. 8.2. The value of the fixed resistor is 20 Ω.

View solution

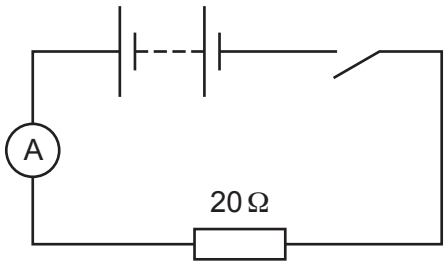

Fig. 8.2

The switch is closed. The reading on the ammeter is 0.30 A.

(i) Calculate the potential difference (p.d.) across the fixed resistor.

potential difference = ... V [3]

(ii) State the name of the device for measuring potential difference.

..... [1]

(iii) Show how the student connects the device stated in **(b)(ii)** to measure the p.d. across the fixed resistor. Draw the correct symbol and connections on Fig. 8.2. [1]

[Total: 8]

© UCLES 2020

9 **(a)** A clamp and stand hold a soft-iron bar above a bench. A coil of wire is wrapped round the soft-iron bar. The coil of wire is part of an electric circuit. Fig. 9.1 shows the arrangement.

View solution

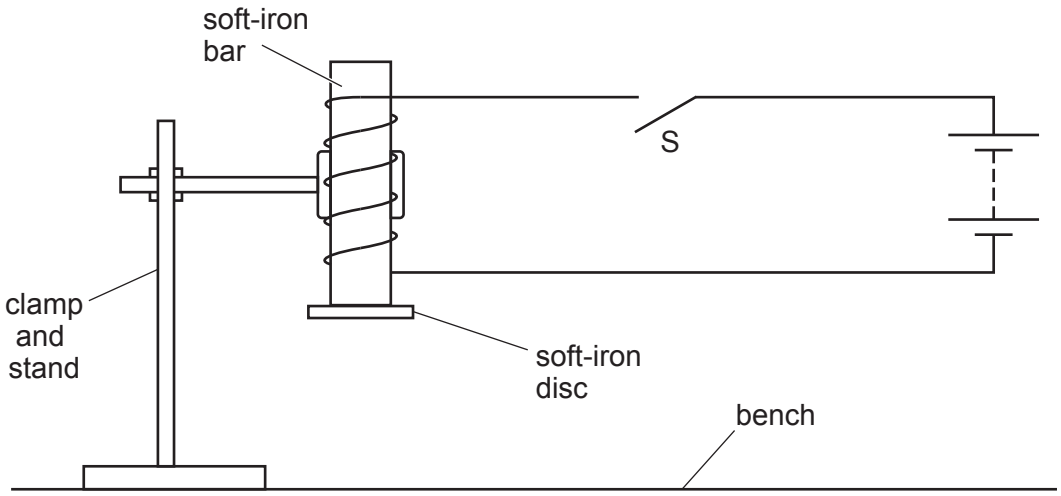

Fig. 9.1

Switch S is closed. A student holds a soft-iron disc close to the bar and releases the disc. The disc becomes attached to the bar as shown in Fig. 9.1.

Explain why the soft-iron disc is attracted to the soft-iron bar.

.....

.....

..... [3]

© UCLES 2020

(b) The circuit in Fig. 9.1 is used to operate a bell in a different circuit, as shown in Fig. 9.2.

View solution

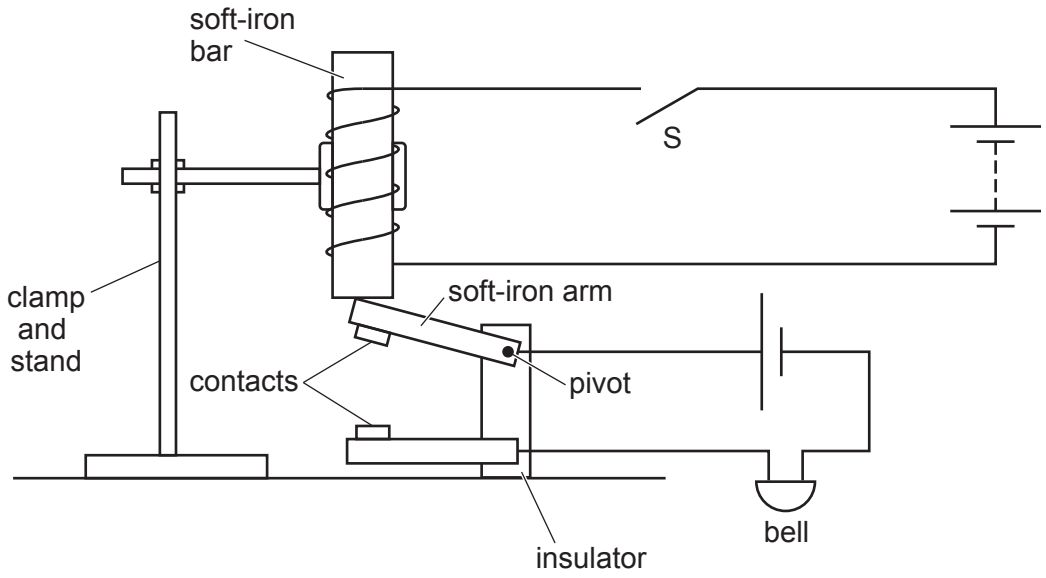

Fig. 9.2

(i) Switch S is closed. The soft-iron arm is attracted to the soft-iron bar.

Explain why the bell operates when the switch S is opened.

.....

.....

.....

.....

..... [4]

(ii) The switch S is closed. The soft-iron arm is attracted to the soft-iron bar.

View solution

The battery in the circuit containing the soft-iron bar becomes fully discharged.

State and explain whether the bell operates.

.....

..... [1]

[Total: 8]

10 (a) Describe an experiment to show that a force acts on a current-carrying conductor placed in a magnetic field. You may draw a diagram to help your answer.

View solution

.....

.....

.....

.....

.....

.....

..... [4]

(b) A current in a wire can cause the wire to get hot and melt the wire.

View solution

Describe how to reduce the heating effect of a current.

.....

..... [1]

[Total: 5]

11 **(a)** Fig. 11.1 represents the structure of four atoms P, Q, R and S.

View solution

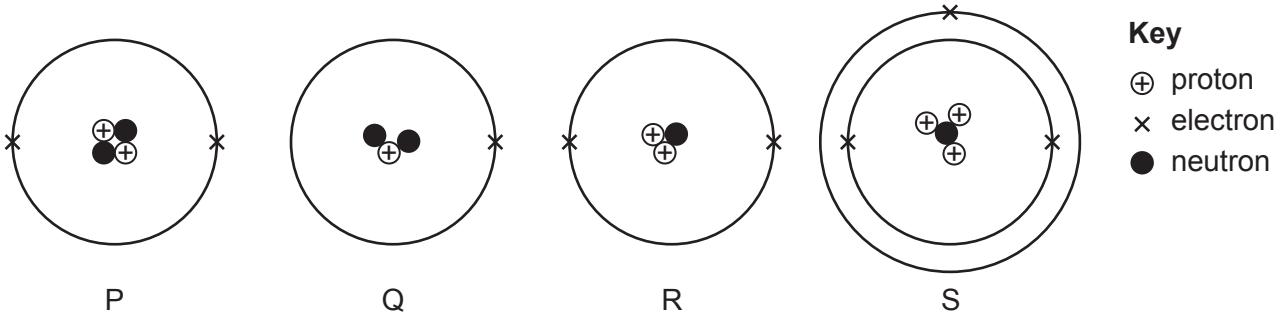

Fig. 11.1

State which **two** atoms are isotopes of the same element and explain your answer.

..... and .....

explanation .....

.....

[2]

(b) Radiographers use X-ray machines in hospitals. X-rays can cause damage to living things.

(i) State an example of the damage that may be caused by X-rays.

View solution

..... [1]

(ii) State and explain how radiographers can be protected from damage caused by X-rays.

.....

.....

..... [2]

View solution

(c) A radioactive source is placed near to a detector, as shown in Fig. 11.2.

View solution

The meter shows a reading of 239 counts per second.

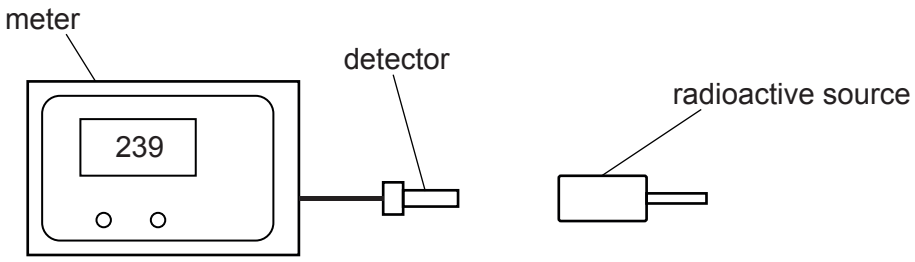

Fig. 11.2

A sheet of paper is placed between the detector and the radioactive source. The meter shows a reading of 240 counts per second.

The sheet of paper is removed and a thin sheet of aluminium is placed between the detector and the radioactive source. The meter shows a reading of 3 counts per second.

(i) Deduce the type of radiation emitted by the radioactive source.

..... [1]

(ii) The radioactive source is removed. The meter shows a reading of 3 counts per second.

State why the meter does not show a reading of zero counts per second.

..... [1]

[Total: 7]

View solution

Permission to reproduce items where third-party owned material protected by copyright is included has been sought and cleared where possible. Every reasonable effort has been made by the publisher (UCLES) to trace copyright holders, but if any items requiring clearance have unwittingly been included, the publisher will be pleased to make amends at the earliest possible opportunity.

To avoid the issue of disclosure of answer-related information to candidates, all copyright acknowledgements are reproduced online in the Cambridge Assessment International Education Copyright Acknowledgements Booklet. This is produced for each series of examinations and is freely available to download at www.cambridgeinternational.org after the live examination series.

Cambridge Assessment International Education is part of the Cambridge Assessment Group. Cambridge Assessment is the brand name of the University of Cambridge Local Examinations Syndicate (UCLES), which itself is a department of the University of Cambridge.

© UCLES 2020