Cambridge Assessment International Education

# Cambridge IGCSE™

| | | | | | | | | | |
|---|---|---|---|---|---|---|---|---|---|
| CANDIDATE NAME | | | | | | | | | |
| CENTRE NUMBER | | | | | | CANDIDATE NUMBER | | | | |

**PHYSICS** **0625/52**

Paper 5 Practical Test **October/November 2020**

**1 hour 15 minutes**

You must answer on the question paper.

You will need: The materials and apparatus listed in the confidential instructions

**INSTRUCTIONS**

- Answer **all** questions.
- Use a black or dark blue pen. You may use an HB pencil for any diagrams or graphs.
- Write your name, centre number and candidate number in the boxes at the top of the page.
- Write your answer to each question in the space provided.
- Do **not** use an erasable pen or correction fluid.
- Do **not** write on any bar codes.
- You may use a calculator.
- You should show all your working and use appropriate units.

**INFORMATION**

- The total mark for this paper is 40.
- The number of marks for each question or part question is shown in brackets [ ].

| For Examiner's Use | |
|---|---|
| 1 | |
| 2 | |
| 3 | |
| 4 | |
| Total | |

This document has **12** pages. Blank pages are indicated.

© UCLES 2020

**1** In this experiment, you will investigate the stretching of a spring.

Carry out the following instructions, referring to Fig. 1.1.

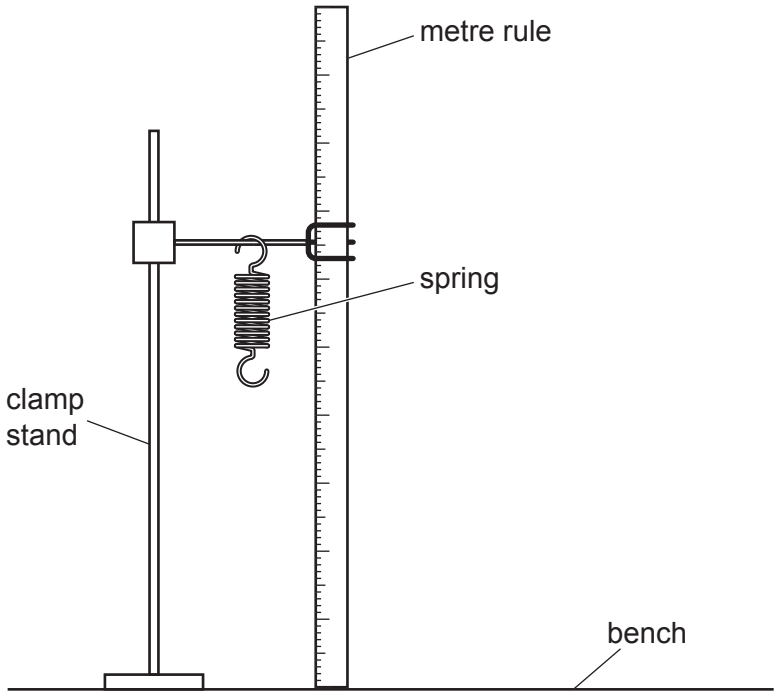


**Fig. 1.1**

**(a)** The metre rule is clamped in position near to the spring. Do **not** change the position of the metre rule.

**(i)** Use the set square provided to take readings from the metre rule to determine the unstretched length *L* of the coiled part of the spring. Record the value of *L*.

View solution

*L* = ..... mm [1]

**(ii)** Draw a diagram to show clearly how you used the set square to obtain an accurate reading from the metre rule.

View solution

[1]

**(b)** • Suspend a load $P$ = 0.20 N on the spring. Record in Table 1.1 the new length $l$ of the spring.

• Repeat the procedure using loads $P$ = 0.40 N, 0.60 N, 0.80 N and 1.00 N.

View solution

**Table 1.1**

| $P$/N | $l$/mm |
|---|---|
| 0.20 | |
| 0.40 | |
| 0.60 | |
| 0.80 | |
| 1.00 | |

[2]

**(c)** Plot a graph of $l$/mm ($y$-axis) against $P$/N ($x$-axis). Start both axes at the origin (0,0).

View solution

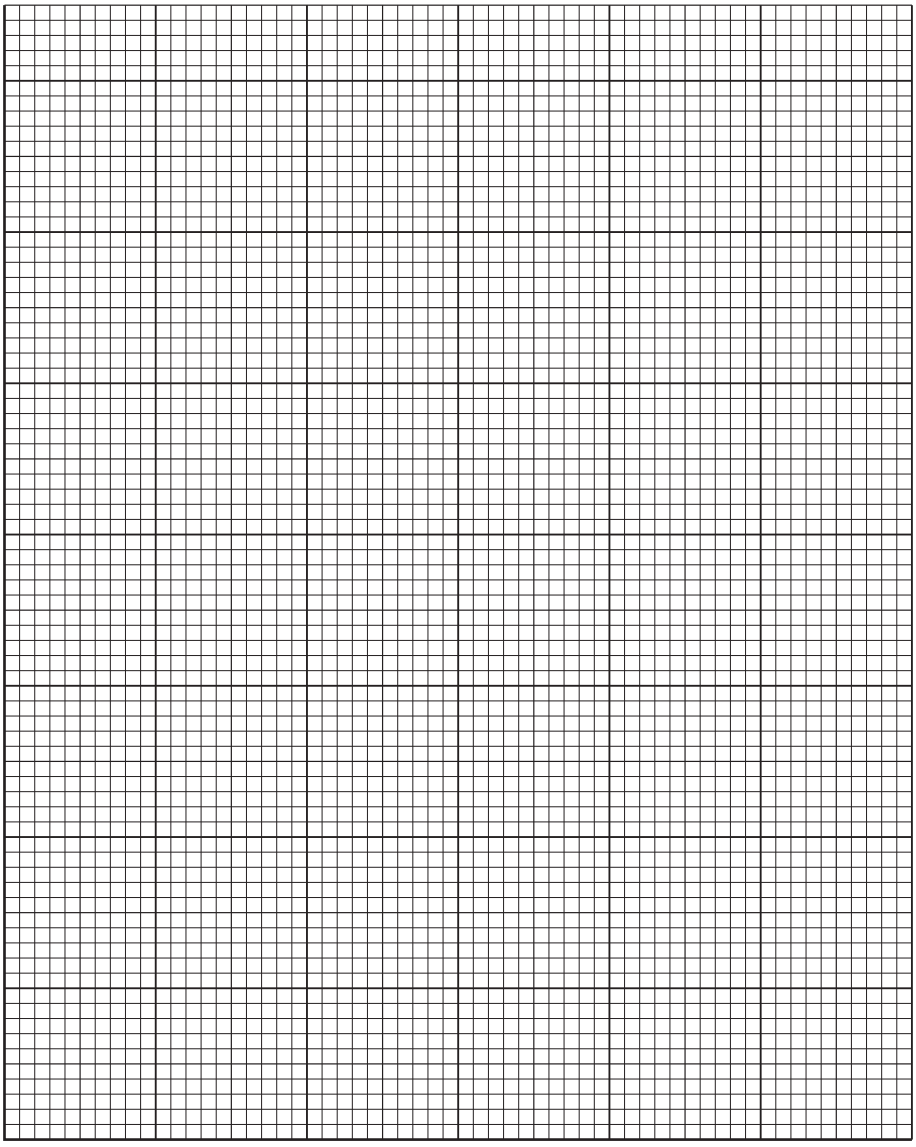

[4]

© UCLES 2020

**(d)** The intercept on the *y*-axis of the graph is numerically equal to the length $l_0$ of the spring when $P = 0$. Determine the value of $l_0$. Show clearly on the graph how you obtained the necessary information.

View solution

$l_0$ = ..... [2]

**(e)** Calculate $L - l_0$.

$L - l_0$ = ..... [1]

[Total: 11]

View solution

**2** In this experiment, you will investigate the refraction of light in a transparent block.

Carry out the following instructions, using the separate ray-trace sheet provided. Refer to Fig. 2.1.

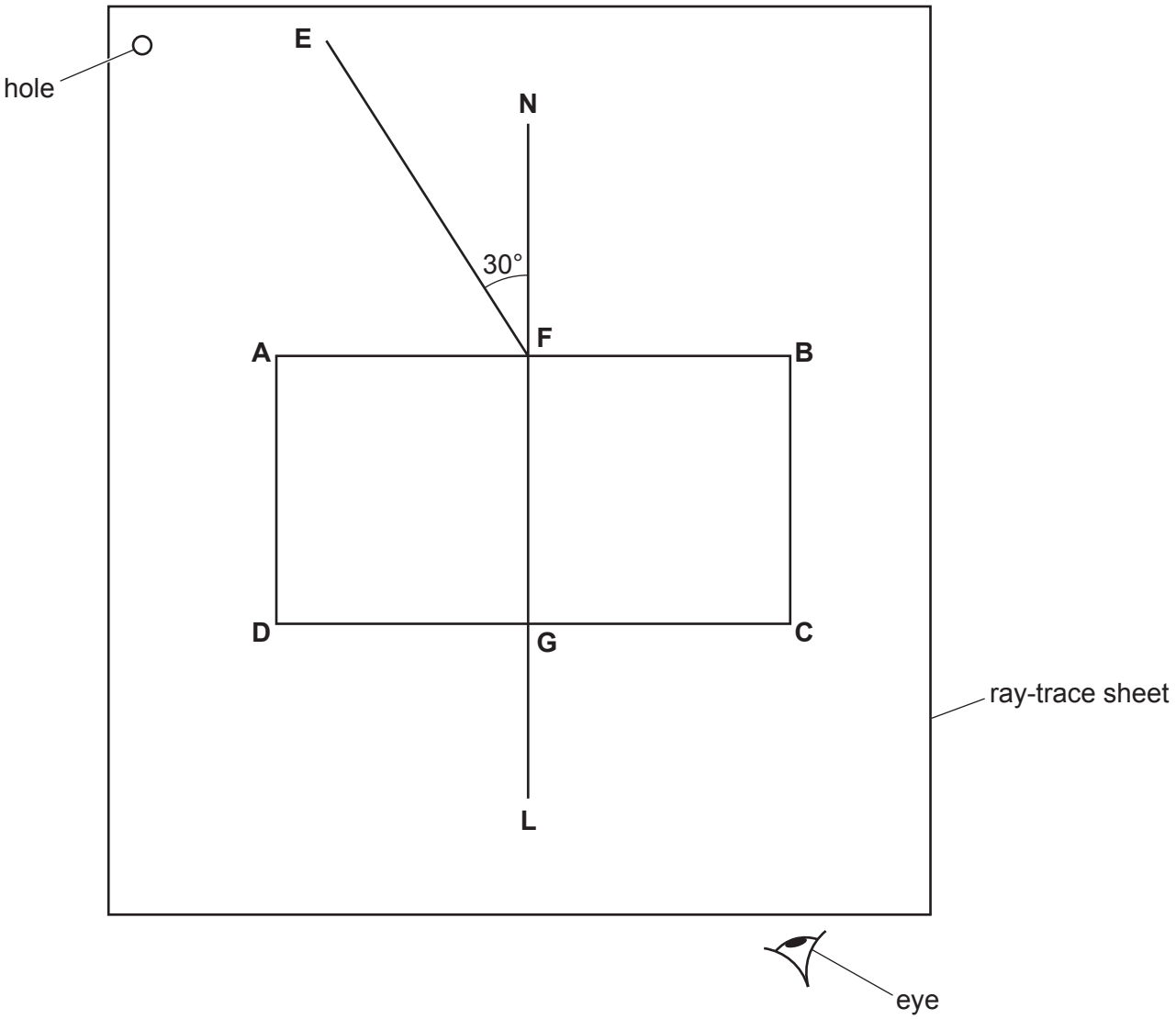


**Fig. 2.1**

**(a)**
- Place the transparent block, largest face down, on the ray-trace sheet supplied. The block should be approximately in the middle of the paper.
- Draw and label the outline of the block **ABCD**.
- Remove the block and draw the normal **NL** at the centre of side **AB**. Continue the normal so that it passes through side **CD** of the block.
- Label the point **F** where the normal **NL** crosses side **AB**.
- Label the point **G** where the normal **NL** crosses side **CD**.

[1]

View solution

**(b) (i)**

- Draw the line **EF** at an angle $i = 30°$ to the normal as shown in Fig. 2.1.
- Place the paper on the pin board.
- Place two pins $P_1$ and $P_2$ on line **EF** at a suitable distance apart for this experiment.
- Replace the block and look from the position of the eye shown in Fig. 2.1, to observe the images of $P_1$ and $P_2$ through side **CD** of the block. Adjust your line of sight until the images of $P_1$ and $P_2$ appear one behind the other.
- Place two pins $P_3$ and $P_4$ between your eye and the block so that $P_3$, $P_4$, and the images of $P_1$ and $P_2$ seen through the block, appear one behind the other.
- Label the positions of $P_1$, $P_2$, $P_3$ and $P_4$.
- Remove the block and the pins.
- Draw a line joining the positions of $P_3$ and $P_4$. Continue the line through the outline of the block until it extends to just outside the outline of the block. Label the end of the line **K**.
- Label the point **H** where the line meets side **CD**.
- Label the point **J** where the line meets the normal **NL**.
- Draw the line **FH**.

[2]

View solution

**(ii)** Measure and record the length $a$ of the line **GH**.

View solution

$a =$ ..... [1]

**(iii)** Measure and record the length $b$ of the line **FH**.

View solution

$b =$ ..... [1]

**(c)** Measure and record the acute angle $\theta$ between the line **NL** and the line **JK**. An acute angle is less than 90°.

View solution

$\theta =$ ..... [2]

**(d)** State **one** precaution that you took in order to produce an accurate ray-trace.

View solution

.....

..... [1]

**(e)** A student suggests that $i$ should be equal to $\theta$ within the limits of experimental accuracy. In this experiment, $i = 30°$. Suggest a range of values for $\theta$ that match this suggestion for your experiment.

range ..... [1]

View solution

© UCLES 2020

**(f)** A student plans to test the suggestion that, in this experiment, $i = \theta$ for all possible values of $i$.

Explain briefly how you would test the suggestion.

View solution

.....

.....

.....

..... [2]

**Tie your ray-trace sheet into this Question Booklet between pages 6 and 7.**

[Total: 11]

**3** In this experiment, you will investigate the resistance of samples of resistance wire.

Carry out the following instructions, referring to Fig. 3.1.

The circuit shown in Fig. 3.1 has been provided for you.

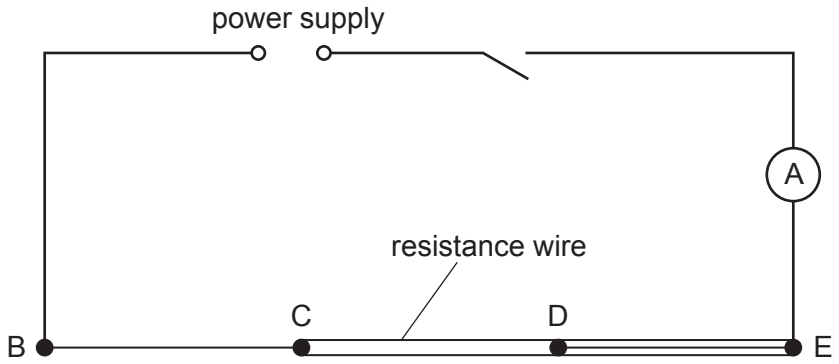


**Fig. 3.1**

Table 3.1 shows how the samples of wire are connected into the circuit.

**Table 3.1**

| section | resistance wire |
|---|---|
| BC | one 30 cm piece |
| CD | two 30 cm pieces |
| DE | three 30 cm pieces |

**(a) (i)**
- Switch on.
- Measure the current $I$ in the circuit.

View solution

$I$ = ..... [1]

**(ii)** Connect the voltmeter across section BC of the resistance wire.

View solution

Measure and record the potential difference (p.d.) $V_1$ across section BC. Switch off.

$V_1$ = ..... [1]

Calculate the resistance $R_1$ of section BC using the equation $R_1 = \frac{V_1}{I}$.

Give your answer to a suitable number of significant figures for this experiment and include the unit.

$R_1$ = ..... [1]

© UCLES 2020

**(iii)** Disconnect the voltmeter and its leads from section BC. Connect the voltmeter across section CD. Switch on.

Measure and record the potential difference (p.d.) $V_2$ across section CD. Switch off.

View solution

$V_2$ = .....

Calculate the resistance $R_2$ of section CD using the equation $R_2 = \frac{V_2}{I}$. Give your answer to a suitable number of significant figures for this experiment and include the unit.

$R_2$ = ..... [1]

**(iv)** Disconnect the voltmeter and its leads from section CD. Connect the voltmeter across section DE. Switch on.

Measure and record the potential difference (p.d.) $V_3$ across section DE. Switch off.

View solution

$V_3$ = .....

Calculate the resistance $R_3$ of section DE using the equation $R_3 = \frac{V_3}{I}$. Give your answer to a suitable number of significant figures for this experiment and include the unit.

$R_3$ = .....
[3]

**(b) (i)** The sections BC, CD and DE are all the same length and made of the same metal.

View solution

Tick the box to show your conclusion from the results.

☐ The resistance of a section increases as the number of wires increases

☐ The resistance of a section decreases as the number of wires increases

☐ The resistance of a section is independent of the number of wires. [1]

**(ii)** Justify your conclusion in **(b)(i)** by reference to your results.

View solution

.....

..... [1]

**(c)** Explain how you would change this experiment to investigate the relationship between the length of a sample of wire and its resistance.

.....

.....

.....

..... [2]

[Total: 11]

© UCLES 2020

**4** A student investigates the length of time taken for ice cubes to melt when they are placed in water. She uses beakers of water at different temperatures to investigate how the initial temperature of the water affects the time taken for the ice cubes to melt.

Plan an experiment to investigate how the initial temperature of the water affects the time taken for the ice cubes to melt. You are **not** required to carry out this experiment.


View solution

The following apparatus is available:

thermometer
supply of ice cubes
250 $cm^3$ beakers
supply of cold water

In your plan, you should:

- write a list of additional apparatus to use
- explain how to carry out the investigation
- state the key variables to keep constant
- draw a table, or tables, with column headings, to show how to display the readings (you are **not** required to enter any readings in the table)
- explain how to use the readings to reach a conclusion.

.....

.....

.....

.....

.....

.....

.....

.....

.....

© UCLES 2020

.....

.....

.....

.....

.....

.....

.....

.....

.....

.....

..... [7]

**BLANK PAGE**

Permission to reproduce items where third-party owned material protected by copyright is included has been sought and cleared where possible. Every reasonable effort has been made by the publisher (UCLES) to trace copyright holders, but if any items requiring clearance have unwittingly been included, the publisher will be pleased to make amends at the earliest possible opportunity.

To avoid the issue of disclosure of answer-related information to candidates, all copyright acknowledgements are reproduced online in the Cambridge Assessment International Education Copyright Acknowledgements Booklet. This is produced for each series of examinations and is freely available to download at www.cambridgeinternational.org after the live examination series.

Cambridge Assessment International Education is part of the Cambridge Assessment Group. Cambridge Assessment is the brand name of the University of Cambridge Local Examinations Syndicate (UCLES), which itself is a department of the University of Cambridge.

© UCLES 2020