Cambridge Assessment International Education

Cambridge IGCSE™

CANDIDATE NAME									
CENTRE NUMBER						CANDIDATE NUMBER				

PHYSICS **0625/53**

Paper 5 Practical Test **October/November 2020**

1 hour 15 minutes

You must answer on the question paper.

You will need: The materials and apparatus listed in the confidential instructions

INSTRUCTIONS

- Answer **all** questions.
- Use a black or dark blue pen. You may use an HB pencil for any diagrams or graphs.
- Write your name, centre number and candidate number in the boxes at the top of the page.
- Write your answer to each question in the space provided.
- Do **not** use an erasable pen or correction fluid.
- Do **not** write on any bar codes.
- You may use a calculator.
- You should show all your working and use appropriate units.

INFORMATION

- The total mark for this paper is 40.
- The number of marks for each question or part question is shown in brackets [ ].

For Examiner's Use	
1	
2	
3	
4	
Total	

This document has **12** pages. Blank pages are indicated.

© UCLES 2020

1 In this experiment, you will investigate the transfer of thermal energy from a beaker of hot water.

Carry out the following instructions, referring to Fig. 1.1.

Do **not** adjust the thermometer in the clamp.

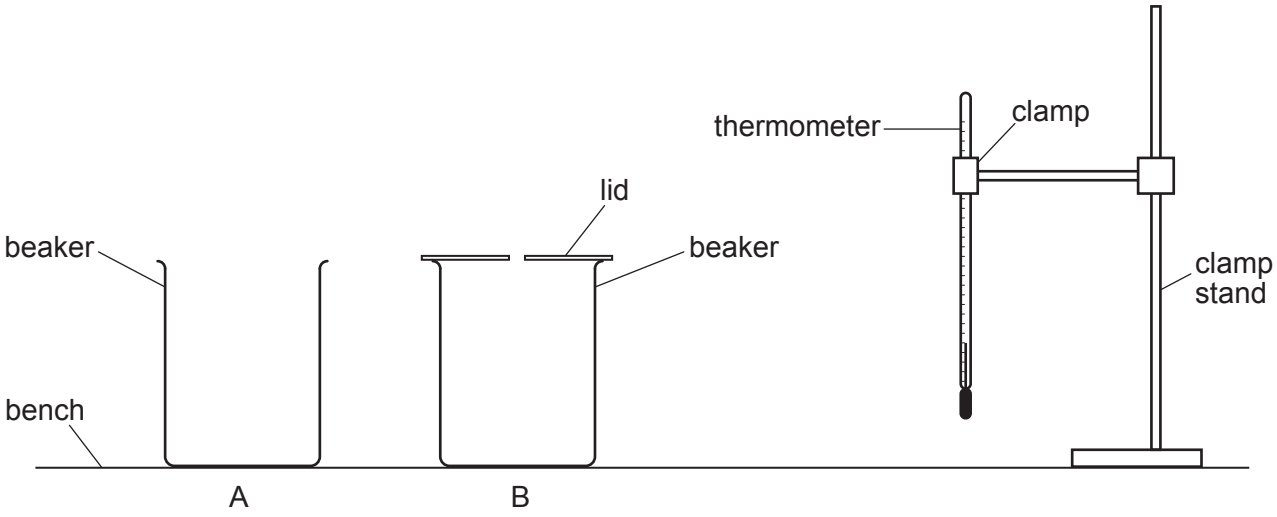

Fig. 1.1

View solution

(a) Pour 100 cm^3 of hot water into beaker A.

Place the thermometer in the water in beaker A by moving the clamp stand.

In Table 1.1, record the temperature θ of the water at time t = 0 and immediately start the stopclock.

Record, in Table 1.1, the temperature θ of the water at times t = 30 s, 60 s, 90 s, 120 s, 150 s and 180 s.

Remove the thermometer from beaker A by moving the clamp stand.

[1]

© UCLES 2020

(b) (i) Repeat the procedure in **(a)** for beaker B. Remove the lid before pouring the hot water into the beaker. Replace the lid immediately after pouring. [2]

(ii) Complete the headings and the values in the time *t* column in Table 1.1. [2]

View solution

Table 1.1

	beaker A without a lid	beaker B with a lid
t/	θ_A/	θ_B/
0		

View solution

(c) Write a conclusion stating how using the lid affects the cooling of the water.

.....

.....

.....

..... [1]

(d) (i) Calculate the average rate of change of temperature x_A of the water in beaker A. Use your values of θ_A from Table 1.1 and the equation $x_A = \dfrac{(\theta_0 - \theta_{180})}{T}$

where θ_0 is the temperature of the water in beaker A at $t = 0$, θ_{180} is the temperature of the water at $t = 180$ s, and $T = 180$ s.

Include a unit.

View solution

x_A = ... [1]

(ii) Calculate the average rate of change of temperature x_B of the water in beaker B. Use your values of θ_B from Table 1.1 and the equation $x_B = \dfrac{(\theta_0 - \theta_{180})}{T}$

where θ_0 is the temperature of the water in beaker B at $t = 0$, θ_{180} is the temperature of the water at $t = 180$ s, and $T = 180$ s.

Include a unit.

x_B = ... [1]

© UCLES 2020

(iii) Thermal energy is transferred from the surface of the water and from the sides of the beaker during this investigation.

A student suggests that more thermal energy is transferred from the surface of the water than from the sides of the beaker.

State whether your results support this suggestion. Justify your statement by reference to your values of x_A, the average rate of change of temperature without a lid, and x_B, the average rate of change of temperature with a lid.

statement .....

justification .....

.....

.....

[2]

(e) Suggest a change to the apparatus or the procedure to produce a greater difference between x_A and x_B.

.....

.....

..... [1]

[Total: 11]

View solution

2 In this experiment, you will investigate circuits containing different combinations of resistors. Circuit A has been set up for you.

Carry out the following instructions, referring to Fig. 2.1.

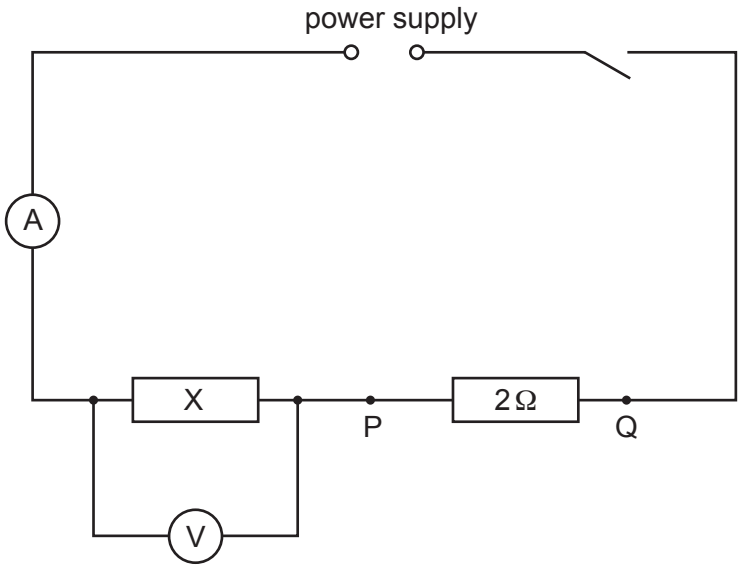

Circuit A

Fig. 2.1

(a) Circuit A

Switch on.

Measure, and record in the first line of Table 2.1, the potential difference (p.d.) V across resistor X.

Measure, and record in Table 2.1, the current I in the circuit.

Switch off.

Table 2.1

circuit	V/	I/	R/Ω
A			
B			
C			

[1]

(b) Connect a second 2 Ω resistor between terminals P and Q so that it is in series with the first 2 Ω resistor, as shown in Fig. 2.2. The rest of the circuit must remain as in Fig. 2.1. This will form circuit B.

View solution

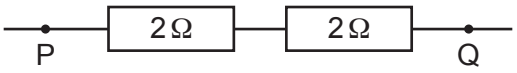

Fig. 2.2

Switch on.

Measure, and record in Table 2.1, the potential difference (p.d.) *V* across resistor X.

Measure, and record in Table 2.1, the current *I* in the circuit.

Switch off.

[2]

(c) Connect a third 2 Ω resistor between terminals P and Q so that it is in series with the other 2 Ω resistors, as shown in Fig. 2.3. The rest of the circuit must remain as in Fig. 2.1. This forms circuit C.

View solution

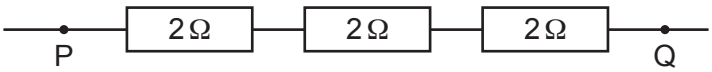

Fig. 2.3

Switch on.

Measure, and record in Table 2.1, the potential difference (p.d.) *V* across resistor X.

Measure, and record in Table 2.1, the current *I* in the circuit.

Switch off.

Complete the headings in Table 2.1.

[1]

(d) **(i)** Calculate, and record in Table 2.1, a value for the resistance *R* of resistor X for each combination of resistors.

View solution

Use your readings from Table 2.1 and the equation $R = \frac{V}{I}$.

[2]

(ii) A student suggests that the values of *R* should be the same.
State whether your results support this suggestion. Justify your statement by reference to values from your results.

statement .....

justification .....

.....

.....

[2]

© UCLES 2020

(e) The results could be checked by using a different circuit.

Draw, on Fig. 2.4, **one** other arrangement of **three** 2 Ω resistors between terminals P and Q. You are **not** required to connect this circuit.

View solution



Fig. 2.4

[1]

(f) **(i)** A student wants to determine *R* by using a variable resistor to vary the current in the circuit. Draw the circuit symbol for a variable resistor.

View solution

[1]

(ii) Explain **one** advantage of using a variable resistor to vary the current compared to the procedure carried out in **(a)**, **(b)** and **(c)**.

.....

.....

.....

..... [1]

[Total: 11]

View solution

3 In this experiment, you will investigate the magnification produced by a converging lens.

Carry out the following instructions, referring to Fig. 3.1.

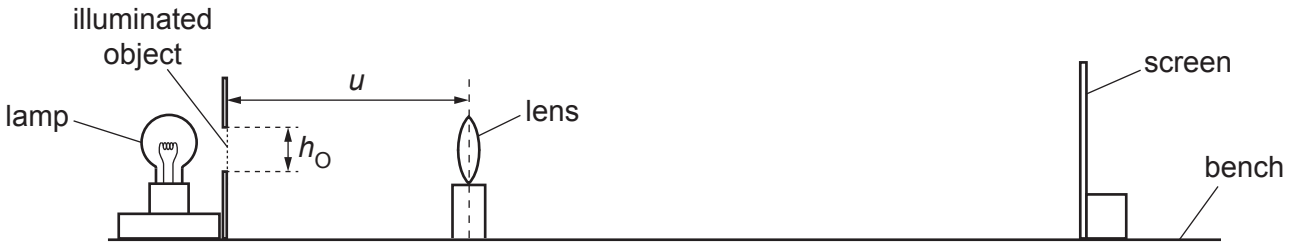

Fig. 3.1

(a) (i) Measure and record the height h_O of the illuminated object.

h_O = ... cm [1]

(ii) Place the lens a distance u = 20.0 cm from the illuminated object.

Place the screen near the lens and switch on the lamp.

Move the screen until a clear focused image of the illuminated object is seen.

Measure, and record in Table 3.1, the height h_I of the image.

Repeat the procedure for u = 25.0 cm, 30.0 cm, 35.0 cm and 40.0 cm.

Switch off the lamp.

Table 3.1

u / cm	h_I / cm	W
20.0		
25.0		
30.0		
35.0		
40.0		

[1]

(b) For each distance u, calculate, and record in Table 3.1, a value W using your results from **(a)** and the equation $W = \frac{h_O}{h_I}$. [1]

(c) Plot a graph of u / cm (y-axis) against W (x-axis).

View solution

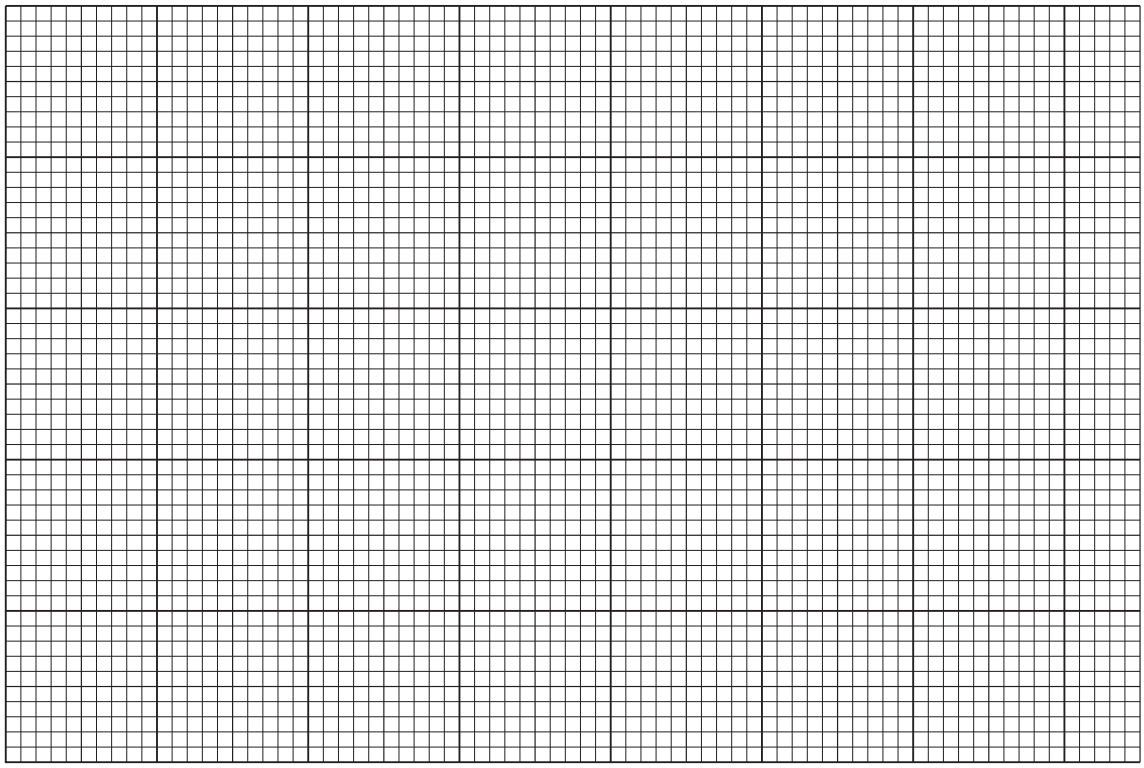

[4]

(d) The gradient of the line on the graph is numerically equal to the focal length f of the lens.

Calculate a value of f for this experiment. Show clearly on the graph how you obtained the necessary information to determine the gradient.

View solution

f = ... [2]

(e) A student decides to extend the experiment using larger values of u.

View solution

Use your results in Table 3.1 to explain why this could produce **less reliable** values for W. Suggest an improvement to overcome this difficulty.

explanation .....

.....

improvement .....

.....

[2]

[Total: 11]

© UCLES 2020

4 A student investigates the factors that affect the average speed of a ball falling in water.

Plan an experiment which will enable him to investigate the effect of **one** factor on the speed at which a ball of modelling clay falls in water.
You are **not** required to carry out the experiment.

View solution

The apparatus available includes:

modelling clay that can be made into different sized balls
metal ball bearings that can be embedded in the modelling clay
a long transparent tube, closed at one end
a supply of water

In your plan, you should:

- state clearly the factor to be investigated
- list any additional apparatus needed
- state any key variables to be kept the same
- explain how to carry out the investigation, including the measurements to be made and any precautions that must be taken to ensure reliable results
- explain how to use the readings to reach a conclusion.

You may draw a diagram if it helps to explain your plan.

© UCLES 2020

.....

.....

.....

.....

.....

.....

.....

.....

.....

.....

.....

.....

.....

.....

.....

.....

.....

.....

.....

.....

.....

..... [7]

BLANK PAGE

Permission to reproduce items where third-party owned material protected by copyright is included has been sought and cleared where possible. Every reasonable effort has been made by the publisher (UCLES) to trace copyright holders, but if any items requiring clearance have unwittingly been included, the publisher will be pleased to make amends at the earliest possible opportunity.

To avoid the issue of disclosure of answer-related information to candidates, all copyright acknowledgements are reproduced online in the Cambridge Assessment International Education Copyright Acknowledgements Booklet. This is produced for each series of examinations and is freely available to download at www.cambridgeinternational.org after the live examination series.

Cambridge Assessment International Education is part of the Cambridge Assessment Group. Cambridge Assessment is the brand name of the University of Cambridge Local Examinations Syndicate (UCLES), which itself is a department of the University of Cambridge.

© UCLES 2020