Cambridge Assessment International Education

Cambridge IGCSE™

CANDIDATE NAME									
CENTRE NUMBER						CANDIDATE NUMBER				

PHYSICS **0625/61**

Paper 6 Alternative to Practical **October/November 2020**

1 hour

You must answer on the question paper.

No additional materials are needed.

INSTRUCTIONS

- Answer **all** questions.
- Use a black or dark blue pen. You may use an HB pencil for any diagrams or graphs.
- Write your name, centre number and candidate number in the boxes at the top of the page.
- Write your answer to each question in the space provided.
- Do **not** use an erasable pen or correction fluid.
- Do **not** write on any bar codes.
- You may use a calculator.
- You should show all your working and use appropriate units.

INFORMATION

- The total mark for this paper is 40.
- The number of marks for each question or part question is shown in brackets [ ].

This document has **12** pages. Blank pages are indicated.

© UCLES 2020

1 A student determines the density of modelling clay by two methods.

Method 1

(a) Fig. 1.1 shows one face of a piece of modelling clay that the student uses. This is sample A.

View solution

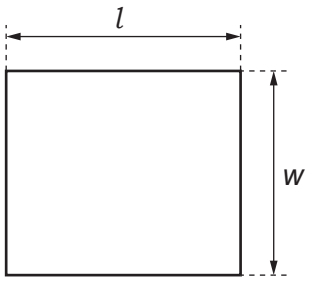

Fig. 1.1

The student measures the depth d of sample A.

d = 3.2 cm

(i) Measure and record the length l and the width w of the sample A of modelling clay. Fig. 1.1 is drawn actual size.

l = ... cm

w = ... cm
[1]

(ii) Calculate the volume V_A of sample A using the equation $V_A = l \times w \times d$.

View solution

V_A = ... cm^3 [1]

(iii) Fig. 1.2 shows sample A on a balance. Record the mass m_A of sample A to the nearest g.

View solution

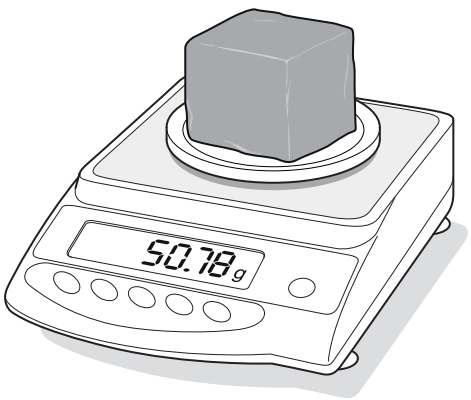

Fig. 1.2

m_A = ... g [1]

© UCLES 2020

(iv) Calculate the density ρ_A of sample A of modelling clay using the equation $\rho_A = \frac{m_A}{V_A}$.

Give your answer to a suitable number of significant figures for this method and include the unit.

View solution

ρ_A = ... [2]

Method 2

(b) The student records the volume V_1 of water in a measuring cylinder.

V_1 = 150 ..... cm^3

He carefully lowers sample B of the same modelling clay into the measuring cylinder until it is completely covered with water.

He records the new reading V_2 of the water level in the measuring cylinder.

View solution

V_2 = 182 ..... cm^3

(i) Calculate the volume V_B of sample B using the equation $V_B = V_2 - V_1$.

V_B = ... cm^3 [1]

(ii) The student measures the mass m_B of sample B.

m_B = 60 ..... g

Calculate the density ρ_B of sample B using the equation $\rho_B = \frac{m_B}{V_B}$. Give your answer to a suitable number of significant figures for this method and include the unit.

View solution

ρ_B = ... [1]

(c) A student suggests that the density of modelling clay is **not** affected by the mass or the volume of the sample used.

State whether your results agree with the suggestion. Justify your answer by reference to your results.

statement .....

justification .....

.....

[2]

View solution

(d) Tick the boxes that describe the correct line of sight for taking a reading of the volume of water in a measuring cylinder. Fig. 1.3 shows the curved surface of water, which is called the meniscus.

View solution

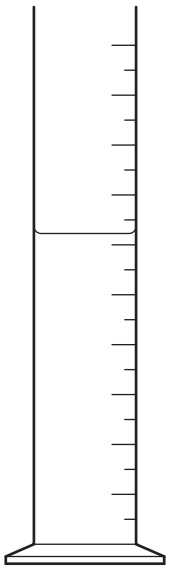

Fig. 1.3

- ☐ along the scale
- ☐ parallel to the scale
- ☐ perpendicular to the scale
- ☐ vertical to the scale
- ☐ in line with the bottom of the meniscus
- ☐ in line with the top of the meniscus
- ☐ in line with midway between the top and bottom of the meniscus.

[2]

[Total: 11]

© UCLES 2020

2 A student investigates the cooling of water under different conditions.

Fig. 2.1 shows the apparatus she uses.

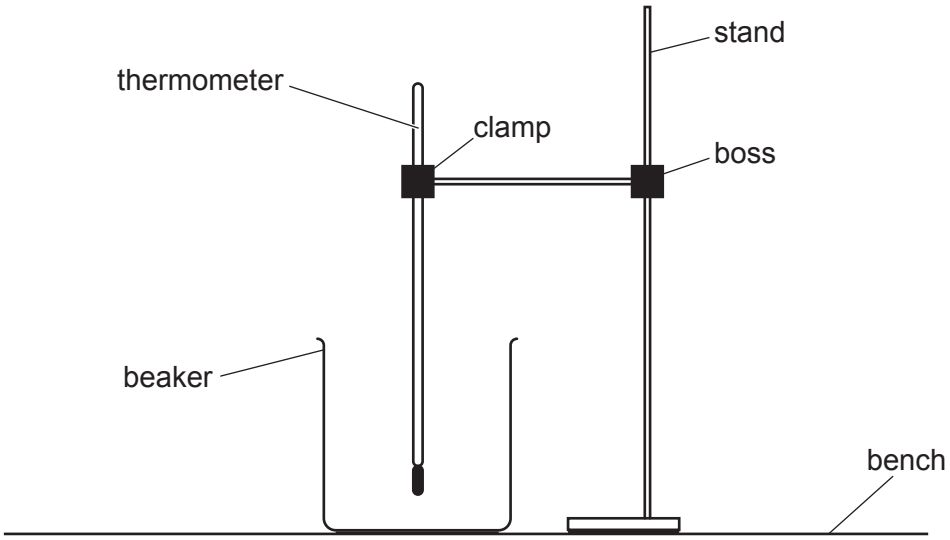

Fig. 2.1

(a) The thermometer in Fig. 2.2 shows the room temperature θ_R at the beginning of the experiment. Record θ_R.



View solution

Fig. 2.2

θ_R = ... [1]

(b) The student pours 200 cm^3 of hot water into the beaker.

She records the temperature θ of the hot water at time t = 0. She immediately starts a stopclock.

After 180 s, she measures the temperature θ shown on the thermometer. Her temperature readings are shown in Table 2.1.

View solution

Table 2.1

t/	θ_1/
	85
	69

(i) Complete the time column and the column headings in Table 2.1. [1]

(ii) Calculate the drop in temperature $\Delta\theta_1$ between times t = 0 and t = 180 s.

View solution

$\Delta\theta_1$ = ... [1]

(iii) Calculate the average rate of cooling R_1 of the water using the equation $R_1 = \frac{\Delta\theta_1}{\Delta t}$, where Δt = 180 s. Include the unit.

View solution

R_1 = ... [1]

(c) The student empties the beaker. She pours 150 cm^3 of hot water into the beaker. She adds 50 cm^3 of cold water to the beaker. She repeats the timing and temperature recording procedure described in **(b)**. The temperature readings are shown in Table 2.2.

View solution

Table 2.2

t/	θ_2/
	69
	57

(i) Complete the time column and the column headings in Table 2.2. [1]

(ii) Calculate the drop in temperature $\Delta\theta_2$ between times t = 0 and t = 180 s.

View solution

$\Delta\theta_2$ = ...

© UCLES 2020

Calculate the average rate of cooling R_2 of the water using the equation $R_2 = \frac{\Delta\theta_2}{\Delta t}$,

where Δt = 180 s. Include the unit.

R_2 = ... [1]

(d) A student suggests that the average rate of cooling R of the water depends on the difference D between the temperature of the water at time t = 0 and room temperature.

View solution

(i) Calculate the difference D_1 using the readings in Table 2.1 and your answer to **(a)**.

D_1 = ...

Calculate the difference D_2 using the readings in Table 2.2 and your answer to **(a)**.

D_2 = ...
[1]

(ii) Write a conclusion about the relationship between R and D. Justify your answer by reference to your results.

conclusion .....

.....

justification .....

.....

.....
[2]

(e) **(i)** Explain why the thermometer scale should be read at right-angles.

View solution

.....

..... [1]

(ii) Explain why the mixture of hot and cold water should be stirred before taking the temperature reading at the start of the experiment in **(c)**.

.....

..... [1]

[Total: 11]

View solution

3 A student investigates the magnification of the image produced by a lens.

Fig. 3.1 shows the apparatus used.

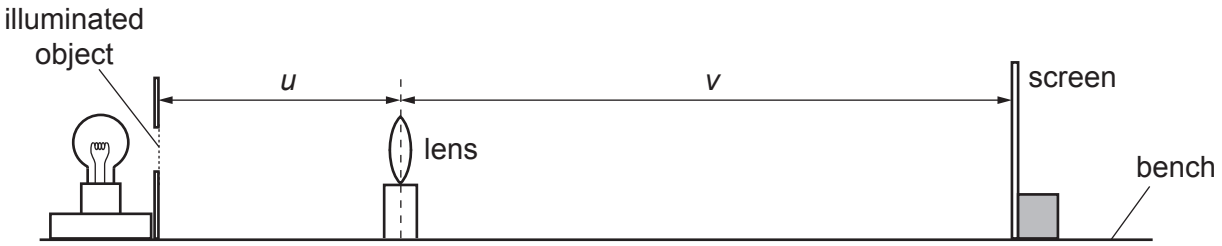

Fig. 3.1

Fig. 3.2 shows a triangular hole in a card that forms the illuminated object. Fig. 3.2 is drawn actual size.

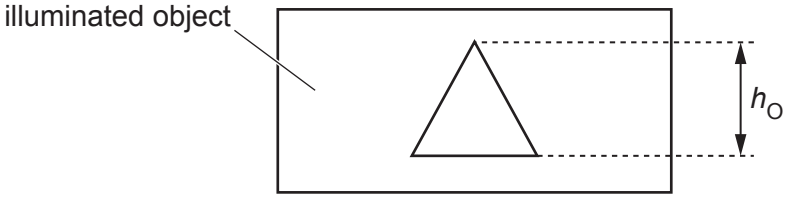

Fig. 3.2

(a) On Fig. 3.2, measure and record the height h_O of the object.

View solution

h_O = ... [1]

(b)
- The student places the lens a distance u = 20.0 cm from the illuminated object.
- He moves the screen slowly until a clearly focused image is formed on the screen.
- He measures the distance v between the centre of the lens and the screen.
- He repeats the procedure using values of u equal to 25.0 cm, 30.0 cm, 35.0 cm and 40.0 cm.
- The readings are shown in Table 3.1.

View solution

Table 3.1

u / cm	v / cm	m
20.0	70.9	
25.0	41.5	
30.0	32.5	
35.0	28.1	
40.0	25.6	

Calculate, and record in Table 3.1, the magnification m for each value of u. Use the equation $m = \frac{v}{u}$. [1]

© UCLES 2020

(c) Plot a graph of u / cm (y-axis) against m (x-axis). Start the y-axis at u = 20.0 cm.

View solution

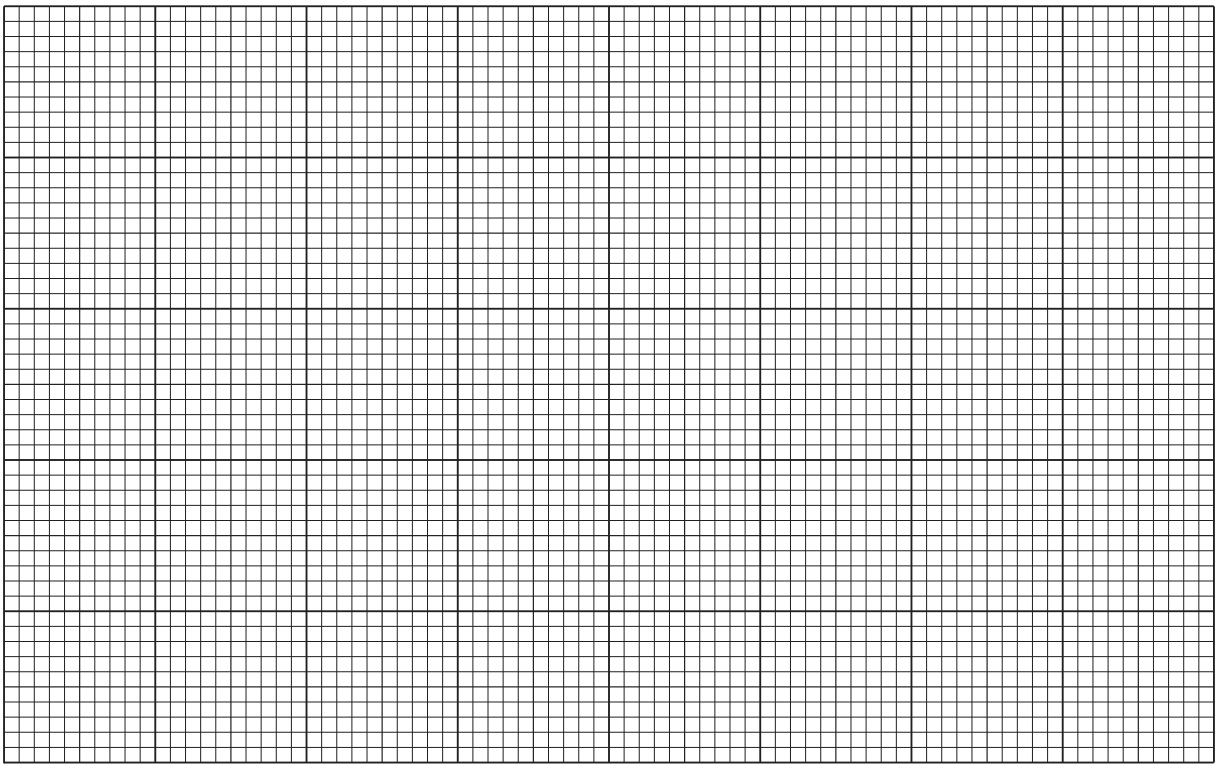

[4]

(d) Use your graph to determine the value of the object distance u_1 when the magnification m = 1.0.

Show clearly on the graph how you obtained the necessary information.

View solution

u_1 = ... cm [2]

(e) Calculate the focal length f of the lens using the equation $f = \frac{u_1}{2}$.

View solution

f = ... cm [1]

(f) State **two** precautions that you would take with this experiment in order to obtain accurate readings.

1. .....

.....

2. .....

.....

View solution [2]

[Total: 11]

4 A student investigates the resistances of different wires.

View solution

Plan an experiment to investigate the resistances of wires made from different metals.

Resistance is calculated using the equation $R = \frac{V}{I}$.

The following apparatus is available:

ammeter
voltmeter
power supply
metre rule
a selection of wires made from different metals.

You can also use other apparatus and materials that are usually available in a school laboratory.

In your plan, you should:

- write a list of suitable metals for the wires you will investigate
- draw a diagram of a suitable electrical circuit using standard electrical symbols
- explain briefly how to carry out the investigation
- state the key variables to keep constant
- draw a table, or tables, with column headings, to show how to display your readings (you are **not** required to enter any readings in the table).

© UCLES 2020

.....

.....

.....

.....

.....

.....

.....

.....

.....

.....

.....

.....

.....

.....

.....

.....

.....

..... [7]

BLANK PAGE

Permission to reproduce items where third-party owned material protected by copyright is included has been sought and cleared where possible. Every reasonable effort has been made by the publisher (UCLES) to trace copyright holders, but if any items requiring clearance have unwittingly been included, the publisher will be pleased to make amends at the earliest possible opportunity.

To avoid the issue of disclosure of answer-related information to candidates, all copyright acknowledgements are reproduced online in the Cambridge Assessment International Education Copyright Acknowledgements Booklet. This is produced for each series of examinations and is freely available to download at www.cambridgeinternational.org after the live examination series.

Cambridge Assessment International Education is part of the Cambridge Assessment Group. Cambridge Assessment is the brand name of the University of Cambridge Local Examinations Syndicate (UCLES), which itself is a department of the University of Cambridge.

© UCLES 2020