Cambridge Assessment International Education

Cambridge IGCSE™

CANDIDATE NAME									
CENTRE NUMBER						CANDIDATE NUMBER				

PHYSICS **0625/62**

Paper 6 Alternative to Practical **October/November 2020**

1 hour

You must answer on the question paper.

No additional materials are needed.

INSTRUCTIONS

- Answer **all** questions.
- Use a black or dark blue pen. You may use an HB pencil for any diagrams or graphs.
- Write your name, centre number and candidate number in the boxes at the top of the page.
- Write your answer to each question in the space provided.
- Do **not** use an erasable pen or correction fluid.
- Do **not** write on any bar codes.
- You may use a calculator.
- You should show all your working and use appropriate units.

INFORMATION

- The total mark for this paper is 40.
- The number of marks for each question or part question is shown in brackets [ ].

This document has **12** pages. Blank pages are indicated.

© UCLES 2020

1 A student investigates the stretching of a spring.

Fig. 1.1 shows the set up.

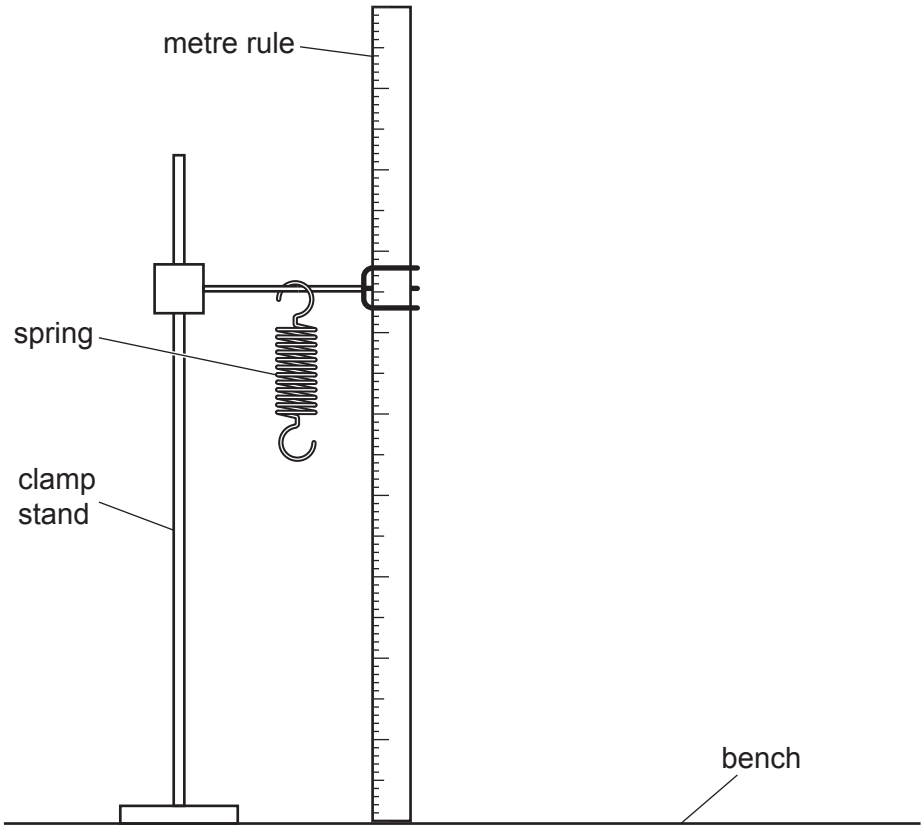

Fig. 1.1

View solution

(a) The metre rule is clamped in position near to the spring.

On Fig. 1.1, show clearly how you would use a set square to obtain an accurate reading of the position of the bottom of the coiled part of the spring from the metre rule. [2]

(b) Fig. 1.2 shows the spring drawn to actual size. On Fig. 1.2, measure the length L of the coiled part of the spring.

View solution



Fig. 1.2

L = ... mm [1]

(c) The student adds a load P = 0.20 N to the spring. He records the new length l of the coiled part of the spring.

He repeats the procedure using loads P = 0.40 N, 0.60 N, 0.80 N and 1.00 N. All the readings are recorded in Table 1.1.

© UCLES 2020

Table 1.1

View solution

P/N	l/mm
0.20	20
0.40	26
0.60	31
0.80	35
1.00	41

Plot a graph of l/mm (y-axis) against P/N (x-axis). Start both axes at the origin (0,0).

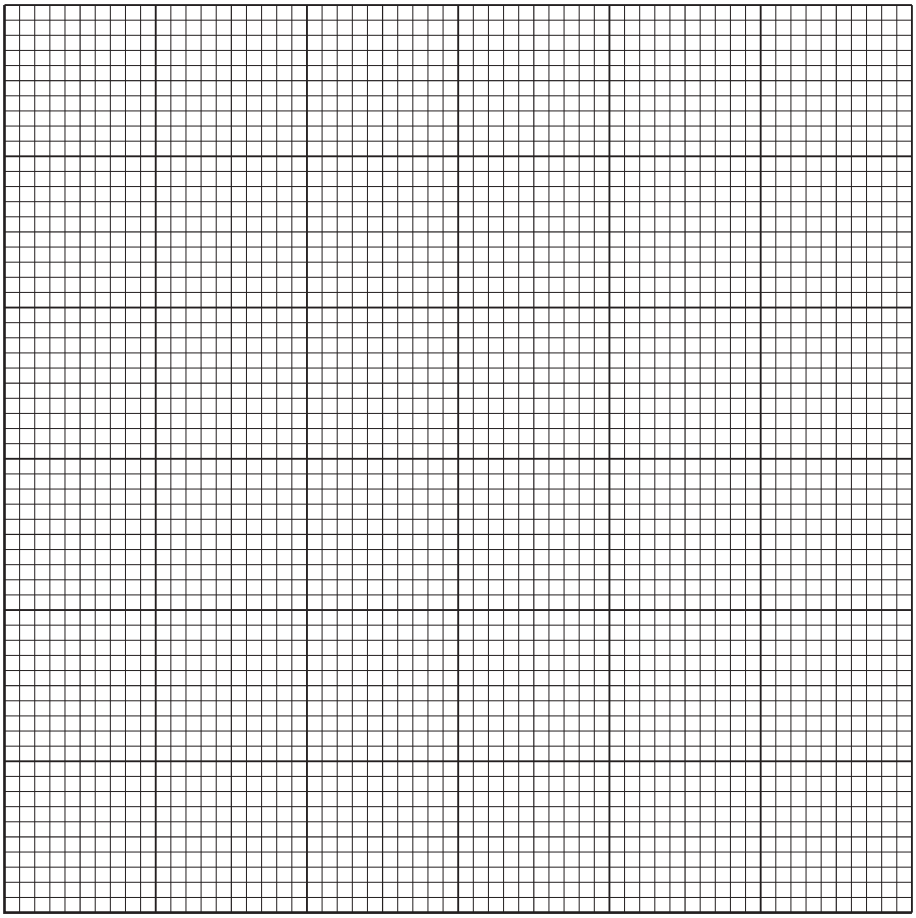

[4]

(d) The intercept on the y-axis of the graph is numerically equal to the length l_0 of the spring when P = 0. Determine the value of l_0. Show clearly on the graph how you obtained the necessary information.

View solution

l_0 = ... [2]

(e) Calculate $L - l_0$.

View solution

$L - l_0$ = ... [2]

[Total: 11]

© UCLES 2020

2 A student investigates the refraction of light in a transparent block.

Fig. 2.1 shows her ray-trace sheet. She places a transparent block on the ray-trace sheet and draws the outline **ABCD** of the block. The student uses pins to mark the positions of objects and images.

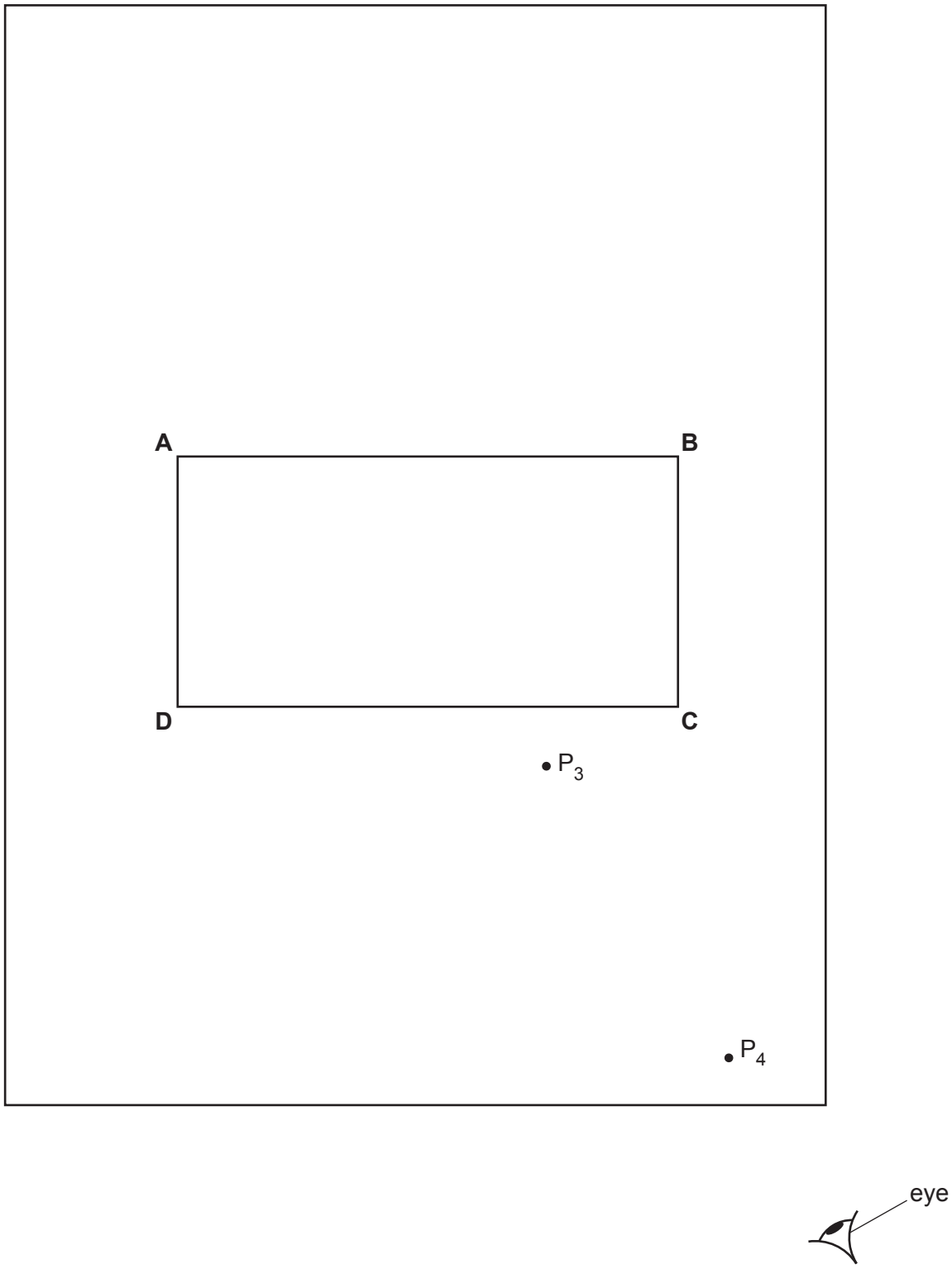

Fig. 2.1

(a) • On Fig. 2.1, draw the normal **NL** at the centre of side **AB**. Continue the normal **NL** so that it passes through side **CD** of the block.

View solution

• Label the point **F** where the normal **NL** crosses side **AB**.

• Label the point **G** where the normal **NL** crosses side **CD**.

[1]

(b) • On Fig. 2.1, draw a line **EF** at least 7 cm long above side **AB** and at an angle $i = 30°$ to the left of the normal. Label the end of the line **E**.

• Mark the positions of two pins P_1 and P_2, to act as objects, on line **EF** at a suitable distance apart for this type of ray-trace experiment.

View solution [1]

(c) • The student looks from the position of the eye shown in Fig. 2.1, to observe the images of P_1 and P_2 through side **CD** of the block. She adjusts her line of sight until the images of P_1 and P_2 appear one behind the other.

• She places two pins P_3 and P_4 between her eye and the block so that P_3, P_4 and the images of P_1 and P_2, seen through the block, appear one behind the other.

View solution

• The positions of P_3 and P_4 are marked on the ray-trace sheet.

(i) Draw a line joining the positions of P_3 and P_4. Continue the line through the block until it extends to just outside the outline of the block. Label this end of the line **K**. [1]

(ii) • Label the point **H** where the line in **(c)(i)** meets side **CD**.

View solution

• Label the point **J** where the line meets the normal **NL**.

• Draw the line **FH**.

[1]

(iii) Measure and record the length *a* of the line **GH**.

View solution

a = ...

Measure and record the length *b* of the line **FH**.

b = ...

[1]

(d) Measure and record the acute angle θ between the line **JF** and the line **JK**. An acute angle is less than 90°.

θ = ... [2]

View solution

© UCLES 2020

(e) State **one** precaution that you would take in order to produce an accurate ray-trace. View solution

.....

..... [1]

(f) A student suggests that i should be equal to θ within the limits of experimental accuracy. In this experiment, $i = 30°$. Suggest a range of values for θ that match this suggestion for the experiment.

range ..... [1]

(g) A student plans to test the suggestion that, in this experiment, $i = \theta$ for all possible values of i.

Explain briefly how you would test the suggestion. View solution

.....

.....

..... [2]

[Total: 11]

© UCLES 2020

BLANK PAGE

3 A student is investigating the resistance of samples of wire.

Fig. 3.1 shows the circuit used.

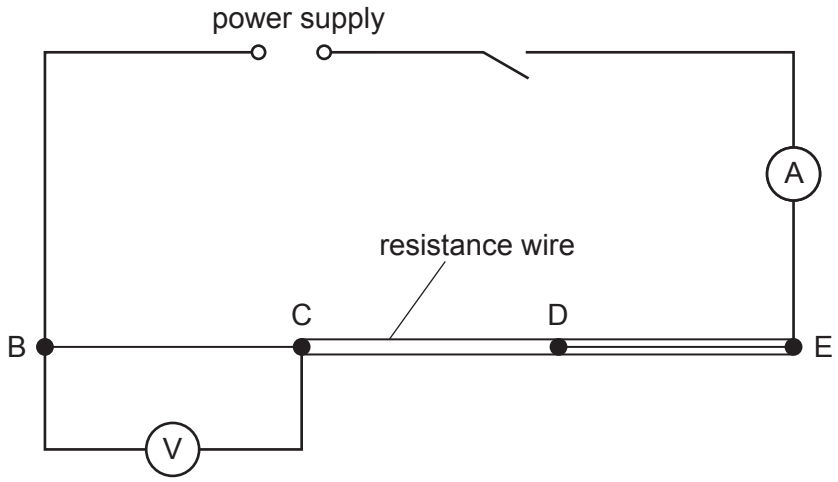

Fig. 3.1

Table 3.1 shows how the samples of wire are connected into the circuit.

Table 3.1

section	wire
BC	one 30 cm piece
CD	two 30 cm pieces
DE	three 30 cm pieces

© UCLES 2020

(a) **(i)** Record the potential difference (p.d.) V_1 across section BC of the resistance wire, as shown on the voltmeter in Fig. 3.2.

View solution

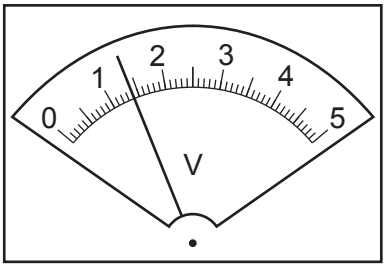

Fig. 3.2

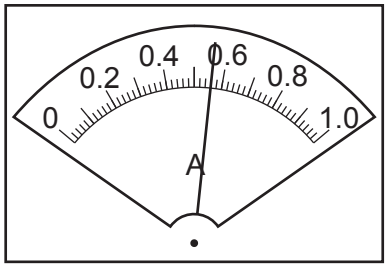

Fig. 3.3

V_1 = ... [1]

(ii) Record the current I in the circuit, as shown in Fig. 3.3.

I = ... [1]

(iii) Calculate the resistance R_1 of the section BC of the resistance wire. Use the equation $R_1 = \frac{V_1}{I}$. Give your answer to a suitable number of significant figures for this experiment.

R_1 = ... [1]

(b) The student connects the voltmeter across section CD.

View solution

He records the potential difference (p.d.) V_2 across section CD.

V_2 = 0.70

He calculates the resistance R_2 of section CD.

R_2 = 1.25

He connects the voltmeter across section DE.

He records the potential difference (p.d.) V_3 across section DE.

V_3 = 0.46

Calculate the resistance R_3 of section DE using the equation $R_3 = \frac{V_3}{I}$. Use the value of I from **(a)(ii)**. Give your answer to a suitable number of significant figures for this experiment.

R_3 = ... [1]

(c) Complete the student's recorded readings by including the units in **(b)**. View solution [1]

© UCLES 2020

(d) The sections BC, CD and DE are all the same length and made of the same metal.

View solution

(i) Tick the box to show your conclusion from the results.

- ☐ The resistance of a section increases as the number of wires increases
- ☐ The resistance of a section decreases as the number of wires increases
- ☐ The resistance of a section is independent of the number of wires.

[1]

(ii) Justify your conclusion in **(d)(i)** by reference to the results.

View solution

.....

..... [1]

(e) Explain how you would change this experiment to investigate the relationship between the length of a sample of wire and its resistance.

.....

.....

.....

..... [2]

(f) A student repeats the investigation in **(a)** to **(d)**, but uses different values of current I. He has a power source with a single fixed output potential difference.

(i) Name the component he could connect into the circuit to vary the current.

View solution

..... [1]

(ii) Draw the circuit symbol for this component.

View solution

[1]

[Total: 11]

4 A student investigates the length of time taken for ice cubes to melt when they are placed in water. She uses beakers of water at different temperatures to investigate how the initial temperature of the water affects the time taken for the ice cubes to melt.

Plan an experiment to investigate how the initial temperature of the water affects the time taken for the ice cubes to melt.


View solution

The following apparatus is available:

thermometer
supply of ice cubes
250 cm^3 beakers
supply of cold water

In your plan, you should:

- write a list of additional apparatus to use
- explain how to carry out the investigation
- state the key variables to keep constant
- draw a table, or tables, with column headings, to show how to display the readings (you are **not** required to enter any readings in the table)
- explain how to use the readings to reach a conclusion.

.....

.....

.....

.....

.....

.....

.....

.....

© UCLES 2020

.....

.....

.....

.....

.....

.....

.....

.....

.....

.....

..... [7]

[Total: 7]

Permission to reproduce items where third-party owned material protected by copyright is included has been sought and cleared where possible. Every reasonable effort has been made by the publisher (UCLES) to trace copyright holders, but if any items requiring clearance have unwittingly been included, the publisher will be pleased to make amends at the earliest possible opportunity.

To avoid the issue of disclosure of answer-related information to candidates, all copyright acknowledgements are reproduced online in the Cambridge Assessment International Education Copyright Acknowledgements Booklet. This is produced for each series of examinations and is freely available to download at www.cambridgeinternational.org after the live examination series.

Cambridge Assessment International Education is part of the Cambridge Assessment Group. Cambridge Assessment is the brand name of the University of Cambridge Local Examinations Syndicate (UCLES), which itself is a department of the University of Cambridge.