Cambridge Assessment International Education

Cambridge IGCSE™

CANDIDATE NAME									
CENTRE NUMBER						CANDIDATE NUMBER				

PHYSICS **0625/63**

Paper 6 Alternative to Practical **October/November 2020**

1 hour

You must answer on the question paper.

No additional materials are needed.

INSTRUCTIONS

- Answer **all** questions.
- Use a black or dark blue pen. You may use an HB pencil for any diagrams or graphs.
- Write your name, centre number and candidate number in the boxes at the top of the page.
- Write your answer to each question in the space provided.
- Do **not** use an erasable pen or correction fluid.
- Do **not** write on any bar codes.
- You may use a calculator.
- You should show all your working and use appropriate units.

INFORMATION

- The total mark for this paper is 40.
- The number of marks for each question or part question is shown in brackets [ ].

This document has **12** pages. Blank pages are indicated.

© UCLES 2020

1 Some students investigate the transfer of thermal energy from a beaker of hot water. They use the apparatus shown in Fig. 1.1.

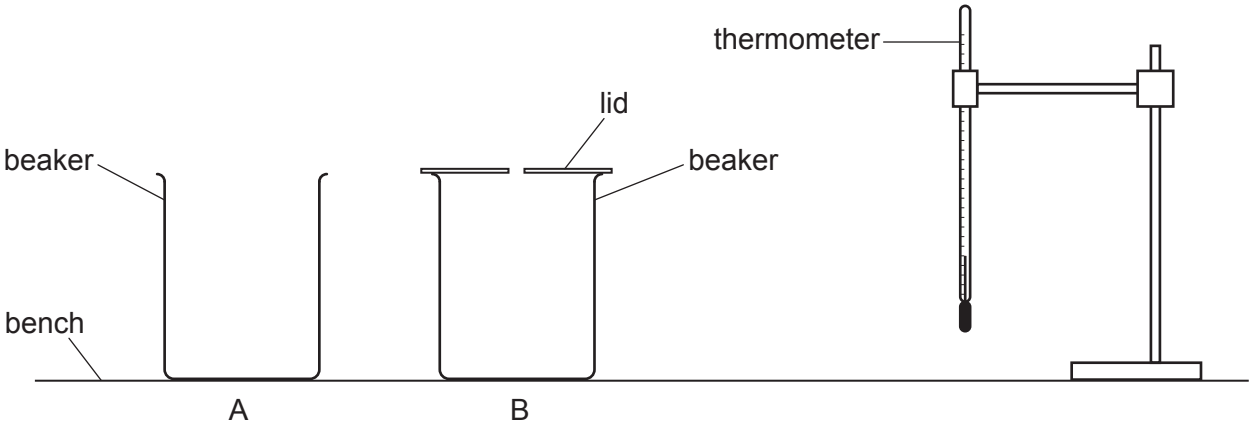

Fig. 1.1

(a) Fig. 1.2 shows the reading on the thermometer at the start of the investigation.

View solution

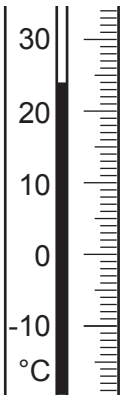

Fig. 1.2

Record the room temperature θ_R shown on the thermometer in Fig. 1.2.

θ_R = ... [1]

© UCLES 2020

(b) A student pours 100 cm^3 of hot water into beaker A.
He records the temperature of the water in beaker A and immediately starts a stopclock.
The student records the temperature θ of the water every 30 s. His readings are shown in Table 1.1.

View solution

The student repeats the procedure for beaker B. Beaker B is fitted with a lid.

Complete the headings and the time column in Table 1.1.

Table 1.1

	beaker A without a lid	beaker B with a lid
t/	θ_A/	θ_B/
0	85.0	86.0
	79.0	83.0
	73.5	80.5
	68.5	78.5
	64.0	77.0
	60.0	76.5
	56.5	76.0

[2]

(c) Describe a precaution that should be taken to ensure that the temperature readings are as accurate as possible in this experiment.

.....

..... [1]

(d) **(i)** Write a conclusion stating how using the lid affects the cooling of the water.

View solution

.....

.....

.....

..... [1]

(ii) The temperature of the water in each beaker decreases during this investigation.

View solution

Describe **one** other similarity in the pattern of the cooling of water in beakers A and B.

.....

..... [1]

© UCLES 2020

(e) (i) Calculate the average rate of cooling x_A of the water in beaker A. Use the values of θ_A from Table 1.1 and the equation $x_A = \frac{(\theta_0 - \theta_{180})}{T}$

where θ_0 is the temperature of the water in beaker A at $t = 0$, θ_{180} is the temperature of the water at $t = 180$ s, and $T = 180$ s.

Include a unit.

View solution

x_A = ... [1]

(ii) Calculate the average rate of cooling x_B of the water in beaker B. Use the values of θ_B from Table 1.1 and the equation $x_B = \frac{(\theta_0 - \theta_{180})}{T}$

where θ_0 is the temperature of the water in beaker B at $t = 0$, θ_{180} is the temperature of the water at $t = 180$ s, and $T = 180$ s.

x_B = ... [1]

(iii) Thermal energy is transferred from the surface of the water and from the sides of the beaker during the investigation.

A student suggests that more thermal energy is transferred from the surface of the water than from the sides of the beaker.

State whether your results support this suggestion. Justify your statement by reference to your values of x_A, the average rate of cooling without a lid, and x_B, the average rate of cooling with a lid.

statement .....

justification .....

.....

.....
[2]

(f) Suggest a change to the apparatus or the procedure to produce a greater difference between x_A and x_B.

.....

.....

..... [1]

[Total: 11]

View solution

2 Some students investigate an electrical circuit containing different combinations of resistors.

They use circuit A shown in Fig. 2.1.
Circuit A is not shown complete.

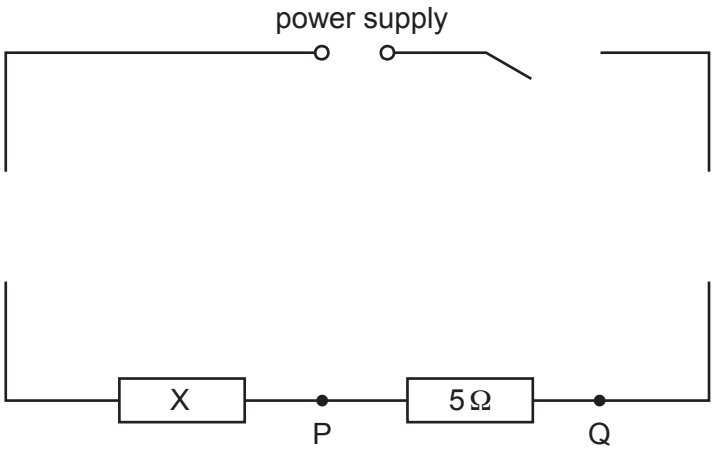

circuit A

Fig. 2.1

View solution

(a) On Fig. 2.1, complete circuit A to show a voltmeter connected to measure the potential difference (p.d.) across resistor X and an ammeter connected to measure the current in the circuit. [2]

(b) A student measures the potential difference V across resistor X and the current I in the circuit. The voltmeter reading is shown in Fig. 2.2. The ammeter reading is shown in Fig. 2.3.

View solution

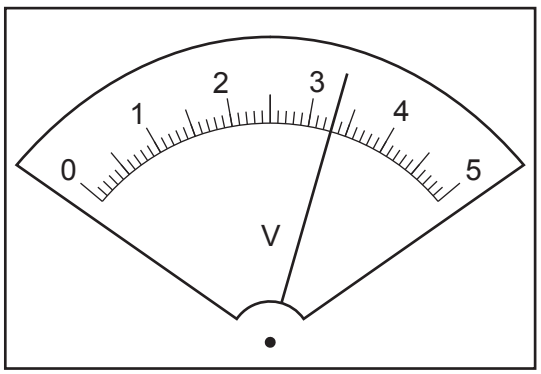

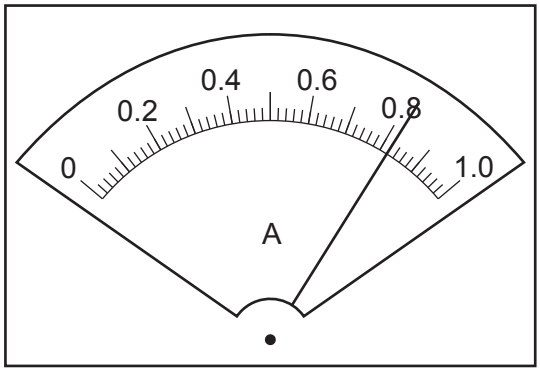

Fig. 2.2 **Fig. 2.3**

Record, in the first line of Table 2.1, the values of V and I shown on the meters in Fig. 2.2 and Fig. 2.3. [1]

© UCLES 2020

Table 2.1

circuit	V/	I/	R/Ω
A			
B	2.1	0.54	
C	1.6	0.39	

(c) The student now connects two 5Ω resistors in series between P and Q, as shown in Fig. 2.4, to form circuit B. The rest of the circuit remains as in Fig. 2.1.

View solution

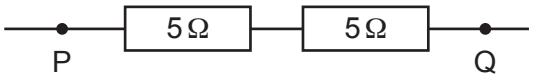

Fig. 2.4

She measures the potential difference (p.d.) V across resistor X and the current I in the circuit.

The student then connects three 5Ω resistors in series between P and Q, as shown in Fig. 2.5, to form circuit C. The rest of the circuit remains as in Fig. 2.1.

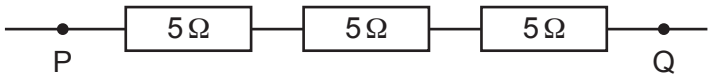

Fig. 2.5

She measures the potential difference (p.d.) V across resistor X and the current I in the circuit.

All her readings are shown in Table 2.1.

(i) Complete the headings in Table 2.1. [1]

(ii) Calculate, and record in Table 2.1, a value for the resistance R of resistor X for each combination of resistors the student has used.

Use the readings from Table 2.1 and the equation $R = \frac{V}{I}$.

[2]

View solution

(d) A student suggests that the values of *R* should be the same.
State whether your results support this suggestion. Justify your statement by reference to values from your results.

statement .....

justification .....

.....

.....

[2]

(e) The results can be checked by using a different circuit.

Draw, on Fig. 2.6, **one** other arrangement of **three** 5 Ω resistors between terminals P and Q.

View solution



Fig. 2.6

[1]

(f) **(i)** A student wants to determine *R* by using a variable resistor to vary the current in the circuit. Draw the circuit symbol for a variable resistor.

View solution

[1]

(ii) Explain **one** advantage of using a variable resistor to vary the current compared to the procedure carried out in **(b)** and **(c)**.

.....

.....

.....

..... [1]

[Total: 11]

View solution

3 A student investigates the image produced by a converging lens.

She uses the apparatus shown in Fig. 3.1.

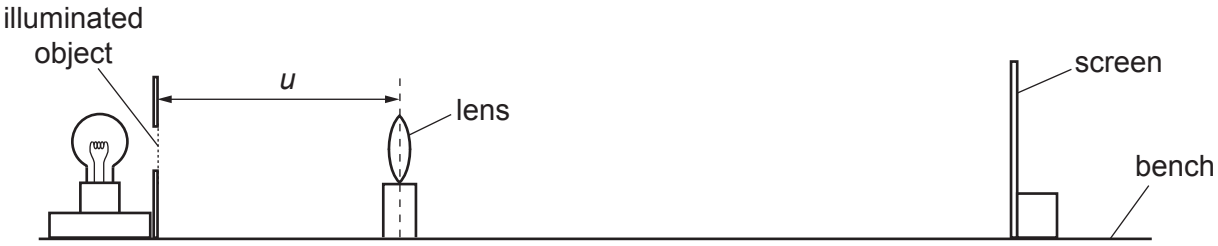

Fig. 3.1

(a) Fig. 3.2 shows the illuminated object, drawn to full size.

View solution

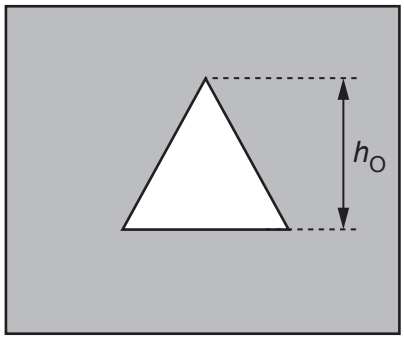

Fig. 3.2

Measure and record the height h_O of the illuminated object, as shown on Fig. 3.2.

h_O = ... cm [1]

(b) The distance *u* between the illuminated object and the lens is set to 20.0 cm.

The screen is moved until a sharp image of the illuminated object is seen, as shown full size in Fig. 3.3.

© UCLES 2020

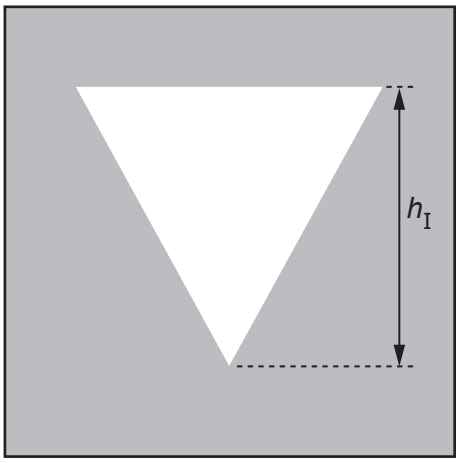

Fig. 3.3

(i) Measure and record in the first line of Table 3.1 the height h_I of the image, as shown on Fig. 3.3. [1]

(ii) Calculate and record in Table 3.1 a value W using your measurements for h_O and h_I and the equation $W = \frac{h_O}{h_I}$.

View solution

Table 3.1

u / cm	h_I / cm	W
20.0		
30.0	1.5	1.3
40.0	1.0	2.0
50.0	0.7	2.9
60.0	0.6	3.3

[1]

(c) The student repeats the process for u = 30.0 cm, 40.0 cm, 50.0 cm and 60.0 cm. Her results are shown in Table 3.1.

View solution

Plot a graph of u / cm (y-axis) against W (x-axis).

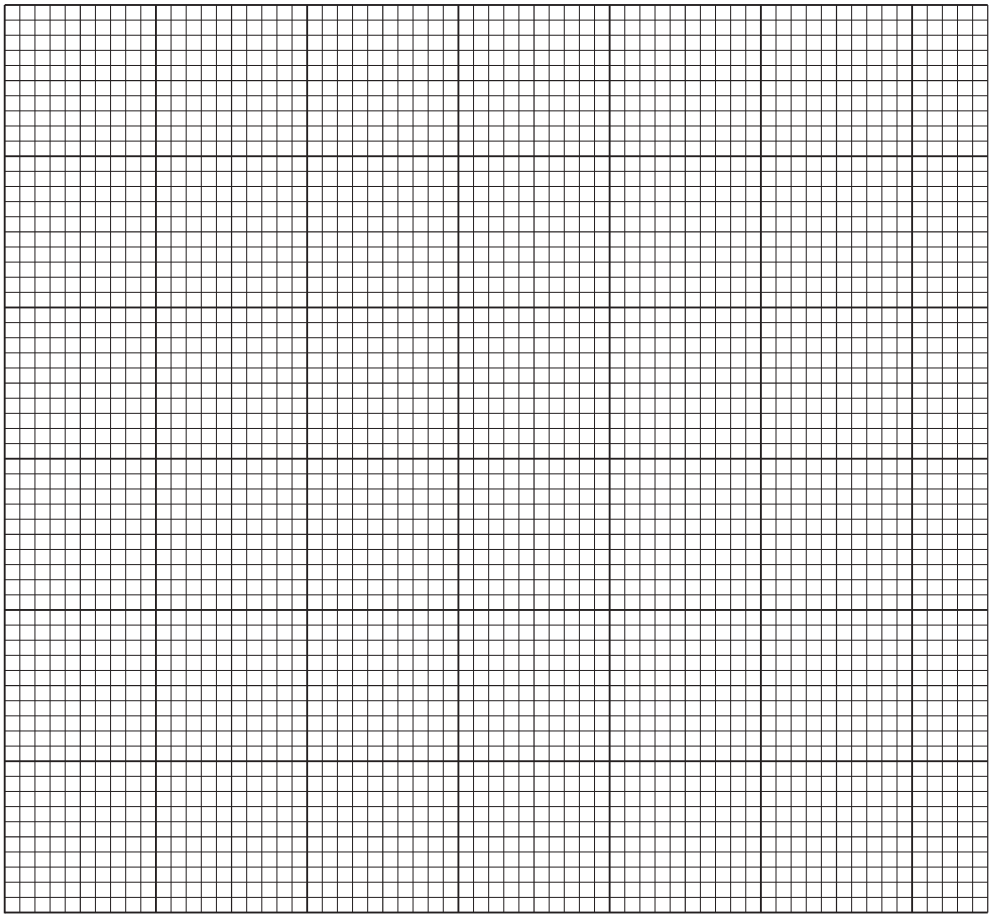

[4]

(d) The gradient of the line on the graph is numerically equal to the focal length f of the lens.

Record a value of f for this experiment. Show clearly on the graph how you obtained the necessary information to determine the gradient.

View solution

f = ... [2]

(e) A student decides to extend the experiment using larger values of u.

View solution

Use Table 3.1 to explain why this could produce **less reliable** values for W.
Suggest an improvement to overcome this difficulty.

explanation .....

.....

improvement .....

.....

[2]

[Total: 11]

© UCLES 2020

4 A student investigates the factors that affect the average speed of a ball falling in water.

Plan an experiment which will enable him to investigate the effect of **one** factor on the speed at which a ball of modelling clay falls in water.

View solution

The apparatus available includes:

modelling clay that can be made into different sized balls
metal ball bearings that can be embedded in the modelling clay
a long transparent tube, closed at one end
a supply of water

In your plan, you should:

- state clearly the factor to be investigated
- list any additional apparatus needed
- state any key variables to be kept the same
- explain how to carry out the investigation, including the measurements to be made and any precautions that must be taken to ensure reliable results
- explain how to use the readings to reach a conclusion.

You may draw a diagram if it helps to explain your plan.

© UCLES 2020

.....

.....

.....