Cambridge Assessment International Education

Cambridge IGCSE™

PHYSICS **0625/11**

Paper 1 Multiple Choice (Core) **October/November 2021**

45 minutes

You must answer on the multiple choice answer sheet.

You will need: Multiple choice answer sheet
Soft clean eraser
Soft pencil (type B or HB is recommended)

INSTRUCTIONS

- There are **forty** questions on this paper. Answer **all** questions.
- For each question there are four possible answers **A**, **B**, **C** and **D**. Choose the **one** you consider correct and record your choice in soft pencil on the multiple choice answer sheet.
- Follow the instructions on the multiple choice answer sheet.
- Write in soft pencil.
- Write your name, centre number and candidate number on the multiple choice answer sheet in the spaces provided unless this has been done for you.
- Do **not** use correction fluid.
- Do **not** write on any bar codes.
- You may use a calculator.
- Take the weight of 1.0 kg to be 10 N (acceleration of free fall = 10 m / s^2).

INFORMATION

- The total mark for this paper is 40.
- Each correct answer will score one mark.
- Any rough working should be done on this question paper.

This document has **20** pages. Any blank pages are indicated.

© UCLES 2021

1 A student measures the volume of a quantity of water.

View solution

Which apparatus is suitable?

A a balance

B a measuring cylinder

C a ruler

D a thermometer

2 The diagrams show distance–time graphs for four objects.

View solution

Which graph represents an object moving with an increasing speed?

A

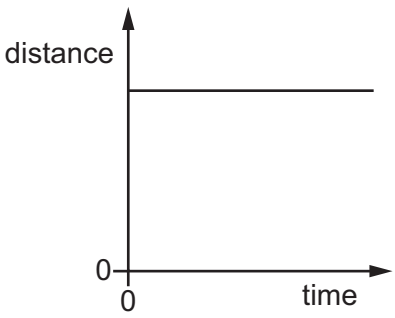

B

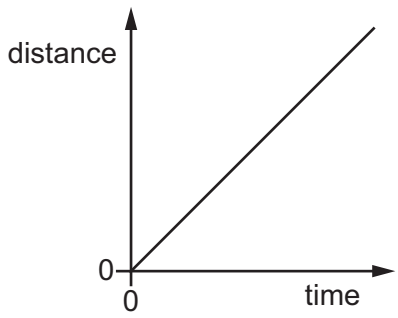

C

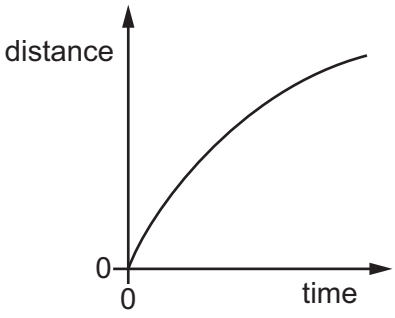

D

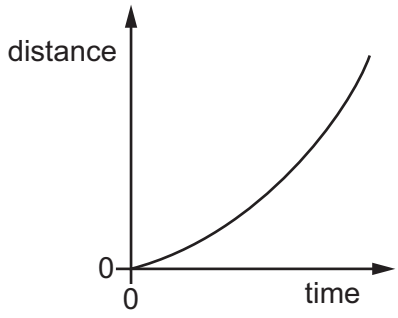

3 The gravitational field strength on the Moon is smaller than that on the Earth.

View solution

A scientist examines a rock which has been brought back from the Moon.

He measures three quantities.

1 the density of the rock

2 the mass of the rock

3 the weight of the rock

Which quantities are the same size on the surface of the Earth and on the surface of the Moon?

A 1 and 2 only **B** 1 and 3 only **C** 2 and 3 only **D** 1, 2 and 3

© UCLES 2021

4 Which substance in the table has the lowest density?

View solution

	substance	mass / g	volume / cm^3
A	nylon	1.2	1.0
B	cotton	1.5	1.0
C	olive oil	1.8	2.0
D	water	2.0	2.0

5 A 100 cm beam balances as shown.

View solution

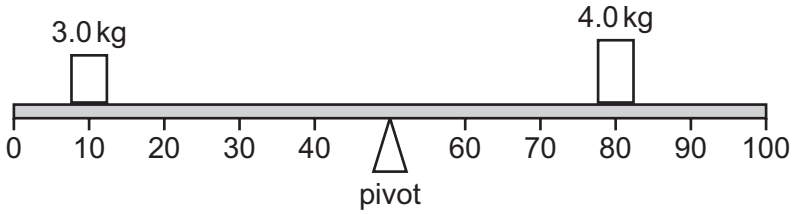

The pivot is moved 10 cm to the left.

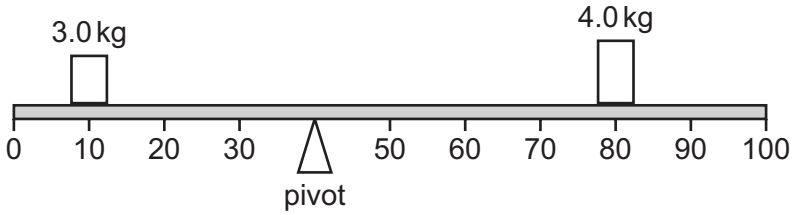

What will be the effect of this change on the anticlockwise and clockwise moments about the pivot?

	anticlockwise moment	clockwise moment
A	decreases	decreases
B	decreases	increases
C	increases	decreases
D	increases	increases

6 A spacecraft is travelling in space with no resultant force and no resultant moment acting on it.

View solution

Which statement about the spacecraft is correct?

A Its direction is changing.

B It is in equilibrium.

C Its speed is decreasing.

D Its speed is increasing.

© UCLES 2021

7 The graph shows the total energy transferred by an electric motor over a period of time.

View solution

In which region of the graph is the greatest power being developed by the motor?

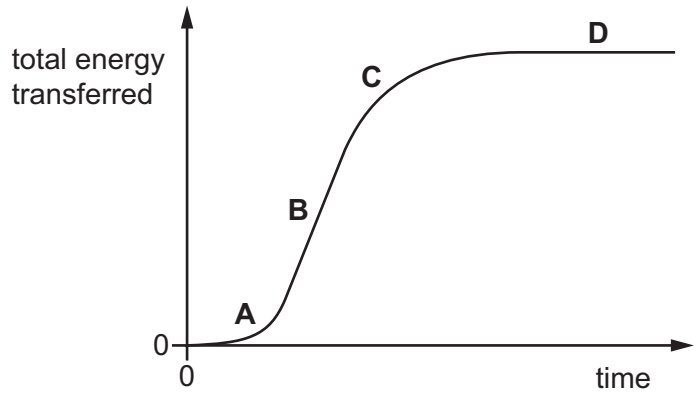

8 Electrical energy may be obtained from nuclear fission.

View solution

In which order is the energy transferred in this process?

A nuclear fuel → generator → reactor and boiler → turbines

B nuclear fuel → generator → turbines → reactor and boiler

C nuclear fuel → reactor and boiler → generator → turbines

D nuclear fuel → reactor and boiler → turbines → generator

9 The diagram shows an electric circuit. When the switch is closed, the lamp is lit.

View solution

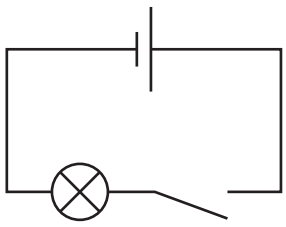

Which row states the type of energy stored in the cell and how this energy is usefully transferred to the lamp?

	type of energy stored in the cell	how this energy is usefully transferred to the lamp
A	chemical	by electric current
B	chemical	by light
C	electrical	by electric current
D	electrical	by light

10 A scientist uses an electric motor to lift a load through a vertical distance of 2.0 m.

He then increases the input power to the motor and repeats the experiment. The efficiency of the motor does not change.

Which row correctly describes the effect that this has on the useful work done lifting the load and the time taken to lift it?

View solution

	work done	time taken
A	decreases	decreases
B	stays the same	decreases
C	decreases	stays the same
D	stays the same	stays the same

11 The box shown has a weight of 15 N.

View solution

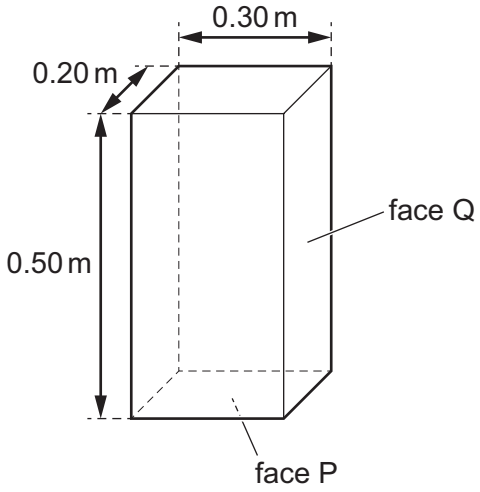

The box is resting on a horizontal surface with face P in contact with the surface.

What is the change in pressure on the surface if the box falls over onto face Q?

A $0.0040\,m^2/N$ **B** $0.0067\,m^2/N$ **C** $100\,N/m^2$ **D** $250\,N/m^2$

12 A liquid is evaporating. The liquid is not boiling.

View solution

Which statement about the liquid is correct at an instant in time?

A Any molecule can escape, and from any part of the liquid.

B Any molecule can escape, but only from the liquid's surface.

C Only molecules with enough energy can escape, and only from the liquid's surface.

D Only molecules with enough energy can escape, but from any part of the liquid.

© UCLES 2021

13 Which row correctly describes the movement of particles in solids and liquids?

View solution

	solids	liquids
A	no movement	move around each other
B	no movement	vibration only
C	vibration only	move around each other
D	vibration only	vibration only

14 A long, thin bar of copper is heated gently and evenly along its length.

View solution

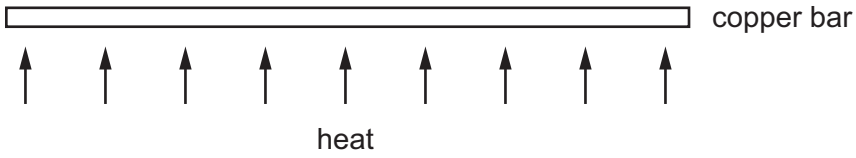

What happens to the bar?

A It becomes less heavy.

B It becomes longer.

C It becomes shorter.

D It bends at the ends.

15 The diagram shows a flask which has been filled with liquid X at room temperature.

View solution

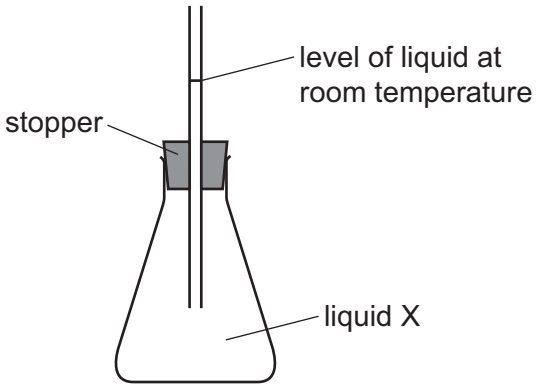

When the flask is placed in warm water, the liquid rises higher up the tube. When the flask is put in cold water, the liquid drops below the original level in the tube.

The experiment is repeated using an identical flask but a different liquid Y. The initial level of the liquid in the tube is the same as that in the original experiment.

Liquid Y expands more, per degree increase in temperature, than liquid X.

Which row is correct for the level of the liquid?

	rises most in warm water	falls most in cold water
A	X	X
B	X	Y
C	Y	X
D	Y	Y

© UCLES 2021

16 The diagram shows a pan used for cooking food.

View solution

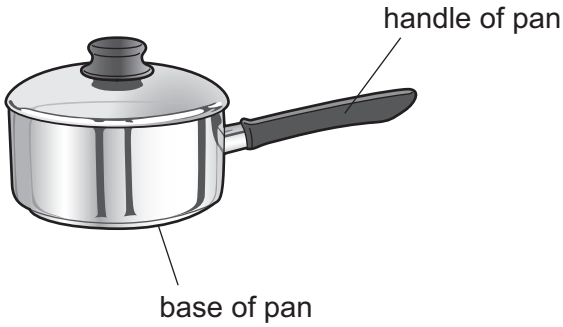

Which row is correct for the materials used to make the base and the handle of the pan?

	base of pan	handle of pan
A	good thermal conductor	good thermal conductor
B	good thermal conductor	poor thermal conductor
C	poor thermal conductor	good thermal conductor
D	poor thermal conductor	poor thermal conductor

17 Which row gives the correct description of a sound wave?

View solution

	action of wave	type of wave
A	transfers energy without transferring matter	longitudinal
B	transfers energy without transferring matter	transverse
C	transfers matter without transferring energy	longitudinal
D	transfers matter without transferring energy	transverse

© UCLES 2021

18 The diagram shows a wave.

View solution

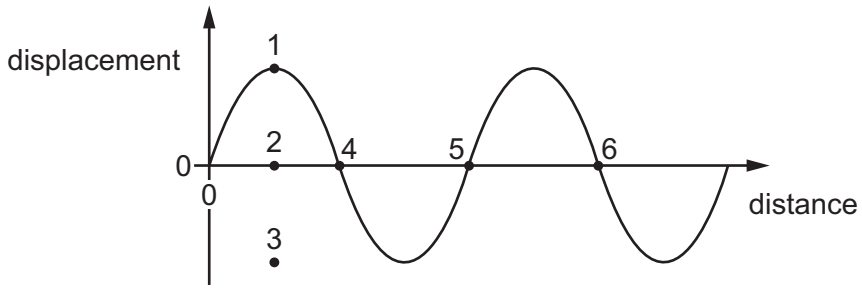

Which row correctly indicates the amplitude and the wavelength of the wave?

	amplitude	wavelength
A	the distance between 1 and 2	the distance between 4 and 5
B	the distance between 1 and 2	the distance between 4 and 6
C	the distance between 1 and 3	the distance between 4 and 5
D	the distance between 1 and 3	the distance between 4 and 6

19 A ray of green light passes through a glass prism as shown.

View solution

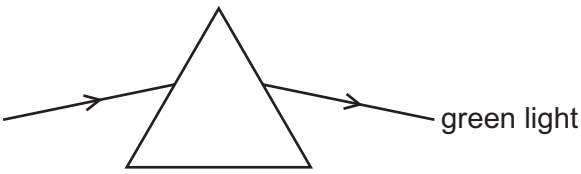

Which colours of light refract as shown in the table?

	refract more than green	refract less than green
A	red	blue
B	red	yellow
C	violet	blue
D	violet	yellow

© UCLES 2021

20 The diagram shows a ray of light in air incident on a glass block. Some of the light is refracted and some of the light is reflected. Two angles, *p* and *q*, are marked on the diagram.

View solution

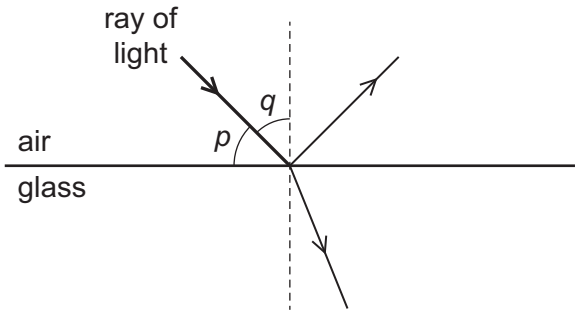

Which row gives the angle of incidence and states whether total internal reflection occurs?

	angle of incidence	total internal reflection
A	*p*	no
B	*p*	yes
C	*q*	no
D	*q*	yes

21 The diagram shows a ray of light in glass incident on the surface between the glass and air.

View solution

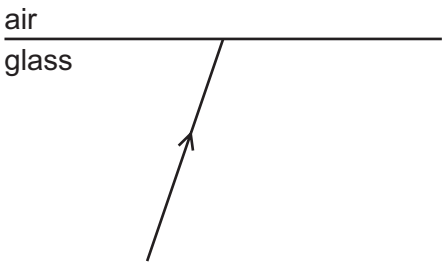

What happens if the angle of incidence is made larger than the critical angle for the glass?

A The angle of refraction becomes equal to 90°.

B There is a refracted ray and a ray reflected inside the glass.

C There is a refracted ray only.

D There is only a ray reflected inside the glass.

22 Radiation from which part of the electromagnetic spectrum is used in the remote controller for a television?

View solution

A infrared waves

B microwaves

C radio waves

D ultraviolet waves

© UCLES 2021

23 Two rays of light are different colours.

View solution

Which row is correct?

	speed of the two colours in a vacuum	wavelengths of the two colours in a vacuum
A	different	different
B	different	the same
C	the same	different
D	the same	the same

24 What is ultrasound?

View solution

A sound waves that are so loud that they damage human hearing

B sound waves that are too high-pitched for humans to hear

C sound waves that are too low-pitched for humans to hear

D sound waves that are too quiet for humans to hear

25 A bar magnet is brought near to a rod of unknown material.

View solution

The unknown rod is attracted to both ends of the bar magnet.

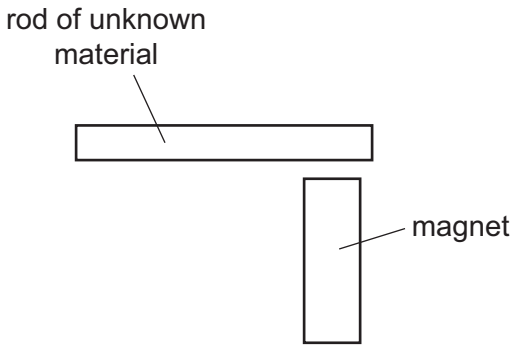

Which material is the rod made from?

A aluminium

B magnetised steel

C unmagnetised iron

D plastic

26 In which circuit is the ammeter measuring the flow of charge through the lamp?

View solution

A

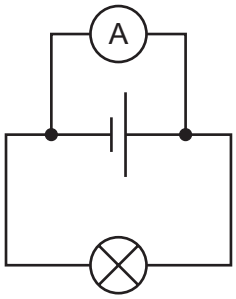

B

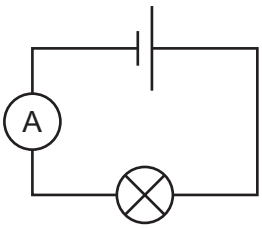

C

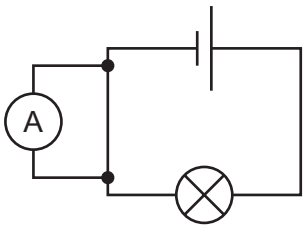

D

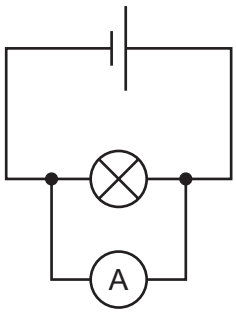

27 In circuit 1, a negative charge flows in a clockwise direction. The bulb is bright.

In circuit 2, the battery is reversed as shown. The bulb is equally bright.

View solution

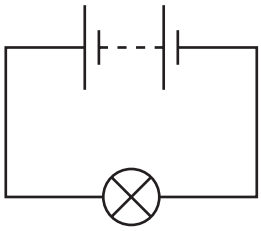

circuit 1

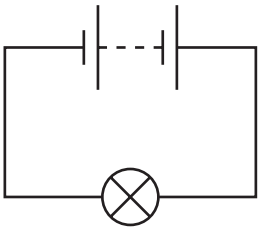

circuit 2

Which charge flows in circuit 2 and in which direction?

	charge	direction
A	negative	anticlockwise
B	negative	clockwise
C	positive	anticlockwise
D	positive	clockwise

© UCLES 2021

28 The diagram shows a circuit containing two resistors of resistance 1.0 Ω and 2.0 Ω.

View solution

A voltmeter is connected across the 1.0 Ω resistor by connecting P to X.

The reading on the voltmeter is 6.0 V.

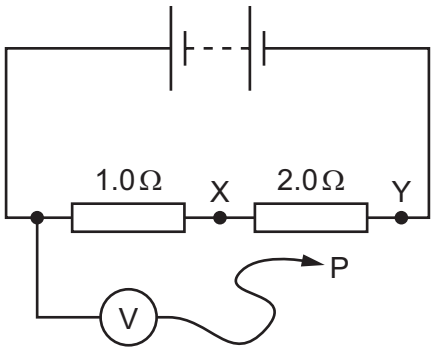

P is moved to point Y in the circuit.

What is the new reading on the voltmeter?

A 3.0 V **B** 6.0 V **C** 12 V **D** 18 V

29 The step-down transformer shown reduces mains voltage to 12 V.

View solution

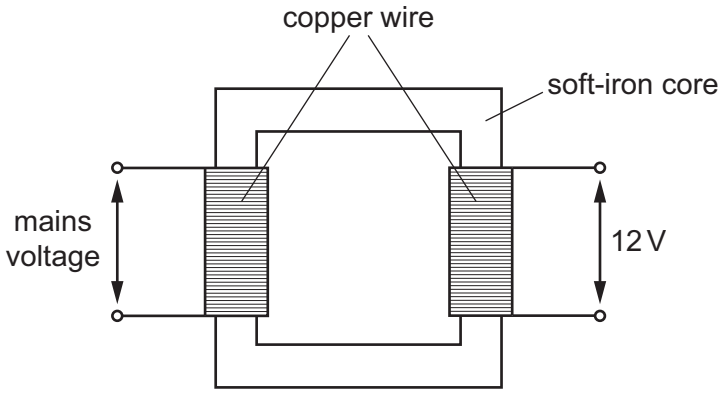

When the transformer is used, some energy is transferred to the surroundings.

Which type of energy is transferred to the surroundings?

A chemical energy

B light energy

C thermal energy

D elastic energy

© UCLES 2021

30 Which circuit contains a fuse?

View solution

A

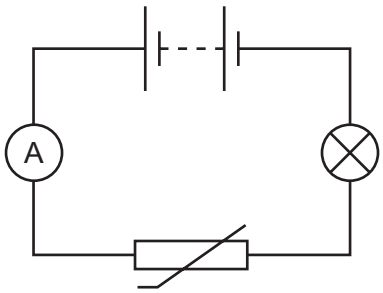

B

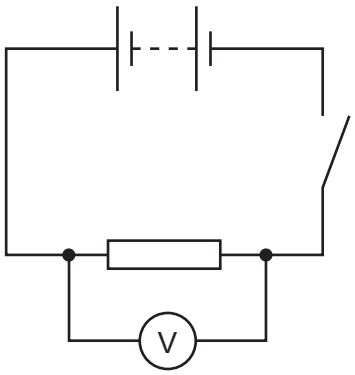

C

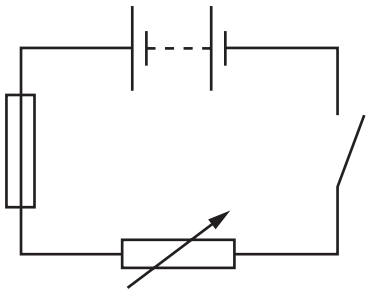

D

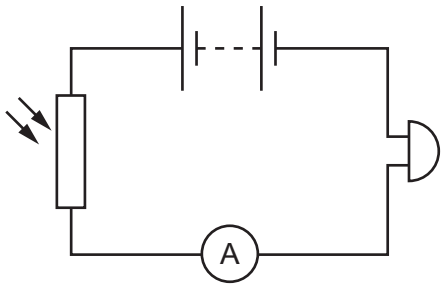

31 The diagram shows an electric circuit.

View solution

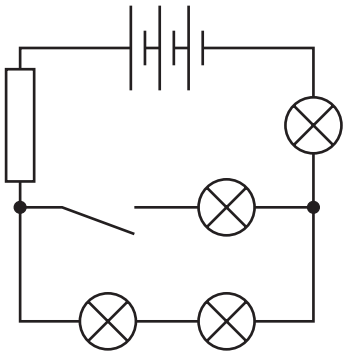

Which row correctly shows the numbers of different components in the circuit?

	cells	lamps	switches
A	1	1	4
B	1	4	1
C	3	1	4
D	3	4	1

© UCLES 2021

32 Two resistors, with resistances R_1 and R_2, are connected in parallel.

View solution

The resistance R_1 is greater than the resistance R_2.

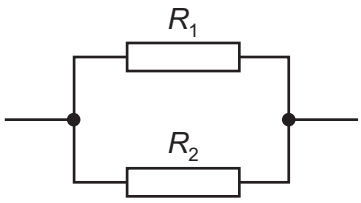

What is the resistance of the parallel combination?

A less than either R_1 or R_2

B equal to R_1

C equal to R_2

D the average of R_1 and R_2

33 The metal cases of electrical appliances are connected to an earth wire.

View solution

Which statement is **not** correct?

A The live wire may become loose and touch the metal case.

B If the metal case becomes live, the earth wire conducts current to the ground.

C The earth wire needs to have a high resistance.

D Earthing metal cases helps prevent a person from receiving an electric shock.

34 A teacher asks, 'Why do we put a fuse in a mains circuit?'

View solution

Student 1 says, 'It protects the wiring from overheating.' Student 2 says, 'It protects us from getting a shock if we touch the live wire.'

Who is correct?

A both students

B neither student

C student 1 only

D student 2 only

© UCLES 2021

35 Which graph represents an alternating current (a.c.)?

View solution

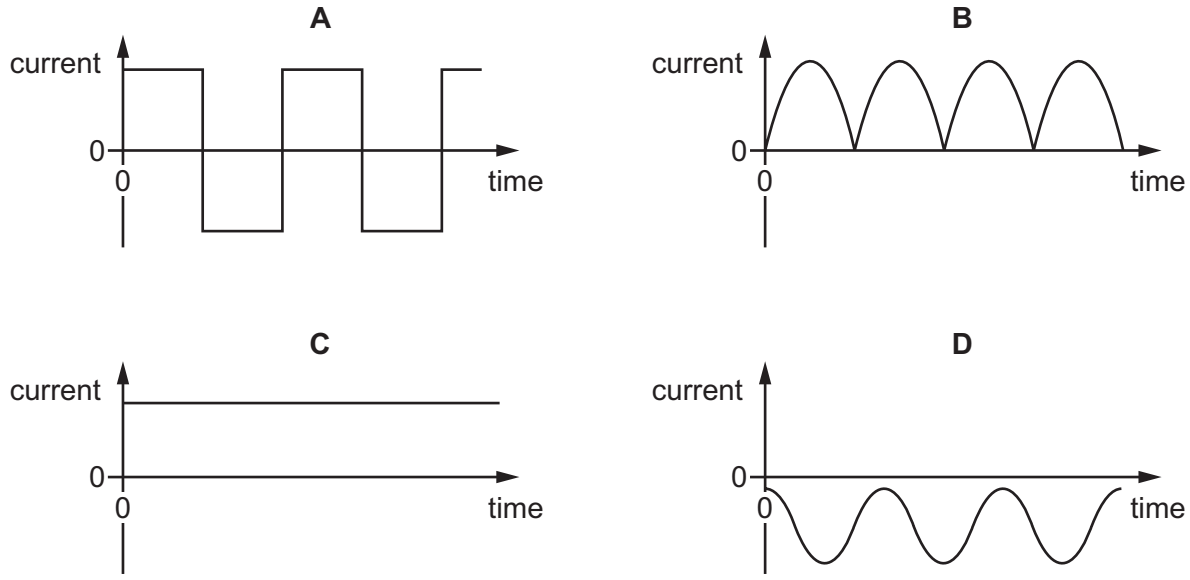

36 The current in a small electric heater is 4.0 A.

The cable connected to the heater is able to carry currents up to 10 A.

Fuses rated 1 A, 3 A, 5 A and 13 A are available.

Which fuse should be used?

A 1 A **B** 3 A **C** 5 A **D** 13 A

View solution

37 A very important experiment improved scientists' understanding of the structure of matter.

The experiment involved α-particles being fired at a thin, gold foil.

What happened?

A All the α-particles were absorbed by the nuclei of the gold atoms.

B All the α-particles were unaffected by the gold atoms.

C Some of the α-particles were attracted by the neutrons in the nuclei of the gold atoms.

D Some of the α-particles were repelled by the protons in the nuclei of the gold atoms.

View solution

38 Some sources of background radiation are natural and others are due to human activity.

Which source is natural?

A medical X-rays

B nuclear weapons testing

C radioactive waste from power stations

D radon gas from rocks

View solution

© UCLES 2021

39 A radioactive material is placed near a detector.

View solution

The detector shows a count rate of 28 000 counts / min.

When a piece of card is put between the material and the counter, the reading decreases to 25 000 counts / min.

When an aluminium sheet is put between the material and the counter, the reading remains at 25 000 counts / min.

When a sheet of lead is put between the material and the counter, the reading decreases to 19 000 counts / min.

What is being emitted by the radioactive material?

A α, β and γ-radiation

B α and β-radiation only

C α and γ-radiation only

D β and γ-radiation only

40 A radioactive isotope has a half-life of 3 years.

View solution

A sample gives a count rate of 100 counts / min on a detector.

Which calculation is used to predict the count rate after 12 years?

A $100 \times \frac{1}{2} \times \frac{1}{2} \times \frac{1}{2} \times \frac{1}{2}$

B $100 \times \frac{1}{2} \times \frac{1}{2} \times \frac{1}{2}$

C $100 \times \frac{3}{12}$

D $100 \times \frac{12}{3} \times \frac{1}{2}$

© UCLES 2021

BLANK PAGE

BLANK PAGE

BLANK PAGE

Permission to reproduce items where third-party owned material protected by copyright is included has been sought and cleared where possible. Every reasonable effort has been made by the publisher (UCLES) to trace copyright holders, but if any items requiring clearance have unwittingly been included, the publisher will be pleased to make amends at the earliest possible opportunity.

To avoid the issue of disclosure of answer-related information to candidates, all copyright acknowledgements are reproduced online in the Cambridge Assessment International Education Copyright Acknowledgements Booklet. This is produced for each series of examinations and is freely available to download at www.cambridgeinternational.org after the live examination series.

Cambridge Assessment International Education is part of the Cambridge Assessment Group. Cambridge Assessment is the brand name of the University of Cambridge Local Examinations Syndicate (UCLES), which itself is a department of the University of Cambridge.

© UCLES 2021