Cambridge Assessment International Education

Cambridge IGCSE™

CANDIDATE NAME									
CENTRE NUMBER						CANDIDATE NUMBER				

PHYSICS **0625/32**

Paper 3 Theory (Core) **October/November 2021**

1 hour 15 minutes

You must answer on the question paper.

No additional materials are needed.

INSTRUCTIONS

- Answer **all** questions.
- Use a black or dark blue pen. You may use an HB pencil for any diagrams or graphs.
- Write your name, centre number and candidate number in the boxes at the top of the page.
- Write your answer to each question in the space provided.
- Do **not** use an erasable pen or correction fluid.
- Do **not** write on any bar codes.
- You may use a calculator.
- You should show all your working and use appropriate units.
- Take the weight of 1.0 kg to be 10 N (acceleration of free fall = 10 m / s^2).

INFORMATION

- The total mark for this paper is 80.
- The number of marks for each question or part question is shown in brackets [ ].

This document has **20** pages.

© UCLES 2021

1 A cyclist travels to a friend's house.

Fig. 1.1 shows the distance–time graph of the journey.

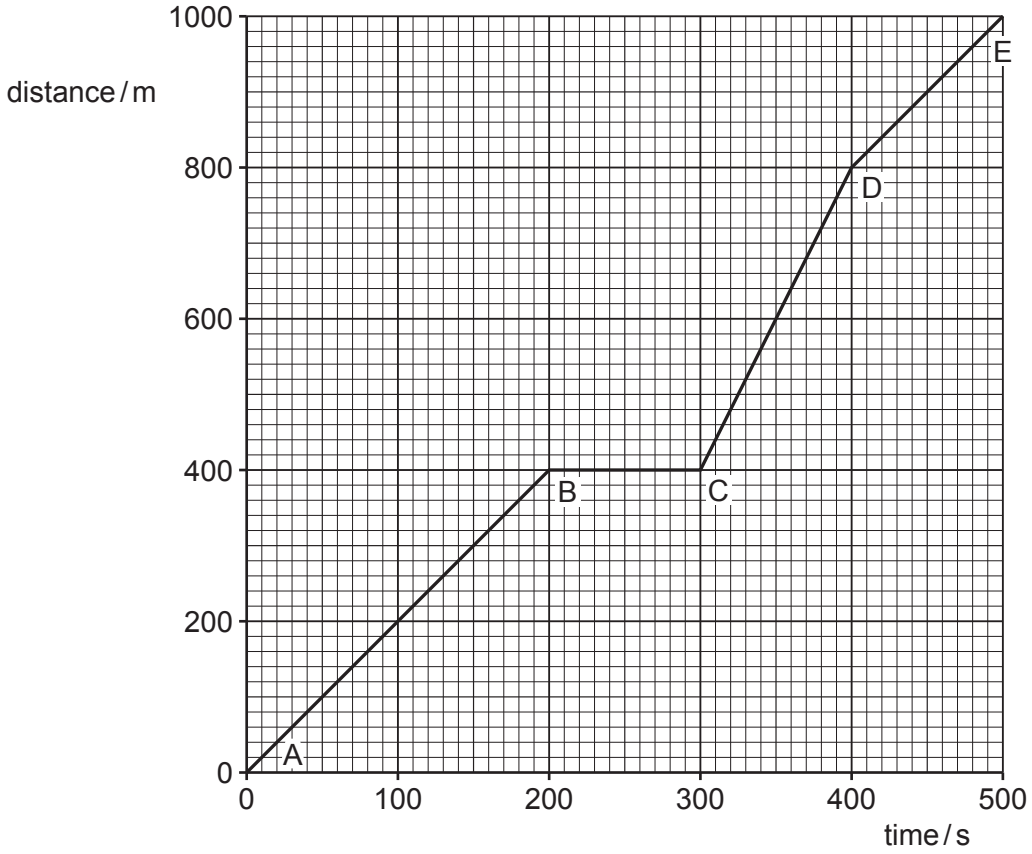

Fig. 1.1

(a) Determine the distance travelled by the cyclist between points C and E.

View solution

distance travelled = ... m [2]

(b) Describe the motion, if any, of the cyclist between points B and C. ..... [1]

(c) State the section, AB, BC, CD or DE, of the graph in which the speed of the cyclist is the fastest. Give a reason for your answer.

View solution

section of graph .....

reason ..... [2]

(d) Calculate the average speed of the cyclist between points A and E. Include the unit in your answer.

View solution

average speed = ... unit ..... [4]

[Total: 9]

© UCLES 2021

2 **(a)** A coin collector has 19 identical coins, as shown in Fig. 2.1.

View solution



Fig. 2.1

Fig. 2.2 shows one of the coins in the coin collector's hand.

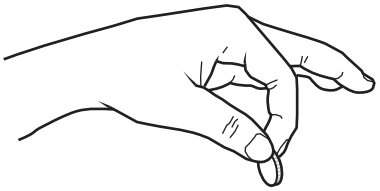

Fig. 2.2

The coin collector wants to check the thickness of one coin. She has a 30 cm ruler.

Describe how she can use the 30 cm ruler to determine the thickness of one coin accurately.

You may include a diagram if you wish.

.....

.....

.....

..... [3]

(b) The coin collector finds another coin. She thinks this coin is made of gold.

View solution

She performs an experiment to find the coin's density.

She obtains the following results:

mass of coin = 52.5 g

volume of coin = 5.4 cm^3

(i) Show that the density of this coin is about 10 g / cm^3.

[3]

(ii) The density of liquid mercury is 13.6 g / cm^3. State and explain whether the coin in **(b)(i)** floats on liquid mercury.

.....

..... [1]

[Total: 7]

View solution

3 Fig. 3.1 shows the vertical forces acting on a toy rocket as it leaves the ground.

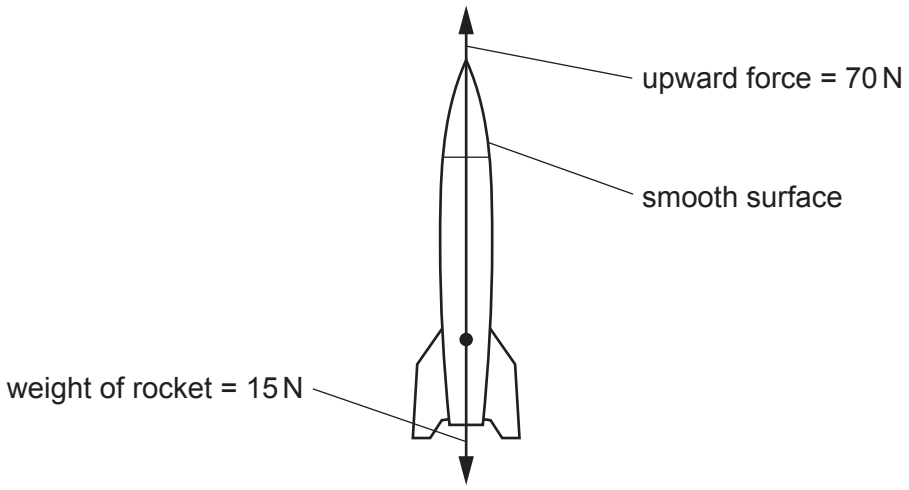

Fig. 3.1

(a) Calculate the size of the resultant vertical force on the rocket.

View solution

resultant force = ... N [2]

(b) Explain why the top of the rocket is pointed and has a smooth surface.

View solution

.....

..... [2]

[Total: 4]

© UCLES 2021

4 **(a)** A teacher wants to measure the mass of a block of metal. She also wants to measure the length, width and height of the block.

View solution

Fig. 4.1 shows the block of metal.

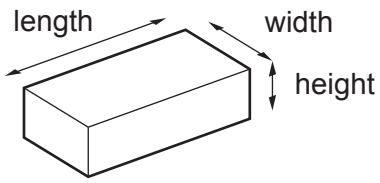

Fig. 4.1

Complete each sentence using a word from the list.

balance **barometer** **protractor** **ruler** **voltmeter**

(i) To find the mass of the metal block, the teacher uses a ..... [1]

(ii) To measure the length, width and height of the metal block, she uses a ..... [1]

(b) The mass of the block is 5000 g.

View solution

Calculate the weight of the block.

weight = ... N [3]

© UCLES 2021

(c) Fig. 4.2 shows another block of metal on a solid surface.

View solution

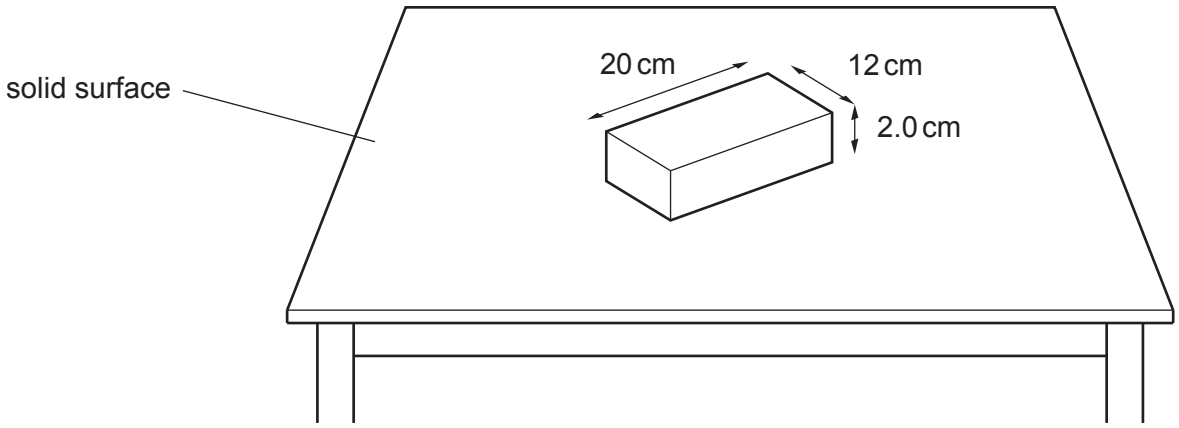

Fig. 4.2 (not to scale)

(i) Calculate the area of the block of metal in contact with the solid surface.

area = ... cm^2 [1]

View solution

(ii) The weight of the block of metal in Fig. 4.2 is 60 N.

Calculate the pressure of the block of metal on the solid surface.

pressure = ... N/cm^2 [3]

[Total: 9]

© UCLES 2021

5 **(a)** A student determines the centre of mass of a piece of wood. The wood is an irregular shape of constant thickness.

He suspends the piece of wood from a nail as shown in Fig. 5.1. The wood is able to swing freely.
The student suspends a weight on a thin string from the nail.

View solution

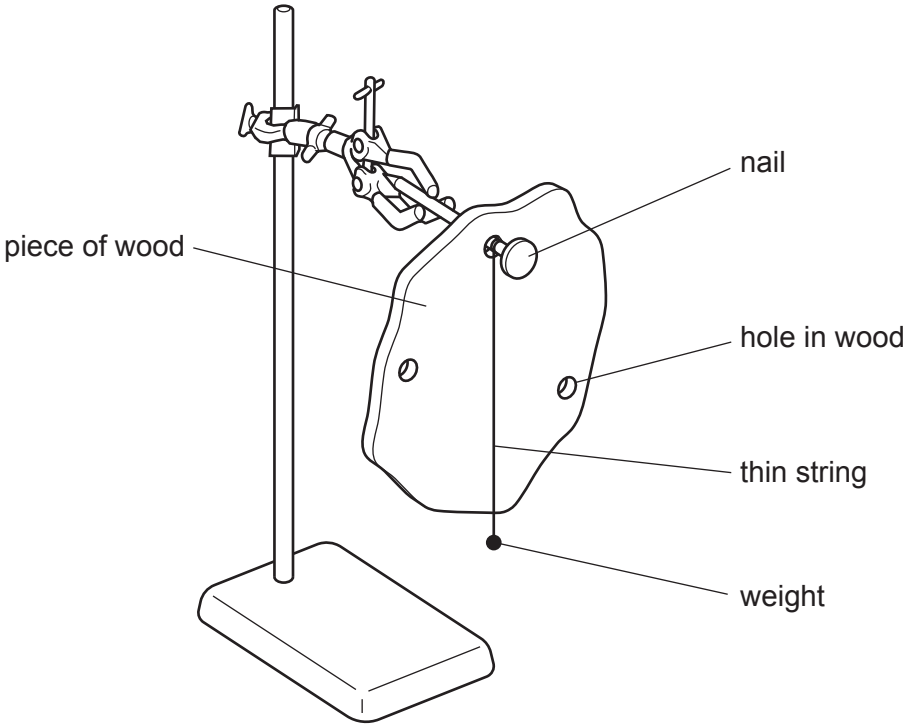

Fig. 5.1

Describe how to determine the centre of mass of the piece of wood in Fig. 5.1.
You may draw a diagram to help your answer.

.....

.....

.....

..... [3]

(b) Fig. 5.2 shows a flat, symmetrical object. Indicate its centre of mass by drawing X in the correct position.

View solution

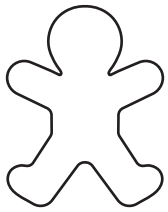

Fig. 5.2

[1]

(c) Fig. 5.3 shows a side view of a drinking-glass in two different positions, A and B.

View solution

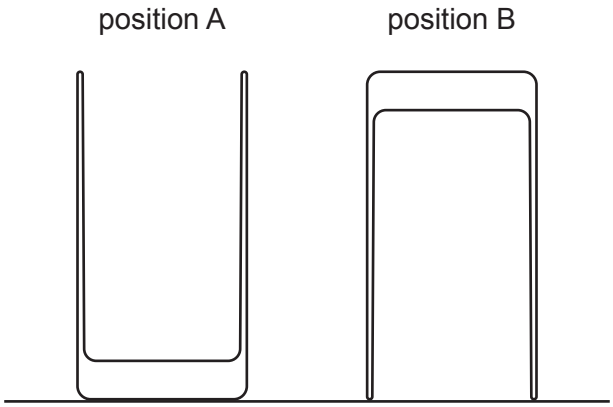

Fig. 5.3

State which position, A or B, is more stable. Explain your answer.

.....

.....

..... [2]

[Total: 6]

6 **(a)** A girl has eight objects made of different materials.

View solution

The materials have different electrical and magnetic properties.

a piece of copper wire **a sheet of aluminium foil** **a glass rod** **an iron nail**

a piece of cotton cloth **a wooden block** **a plastic strip** **a paper bag**

Complete Table 6.1 by adding **one** object for each property. One is done for you.

Choose objects from the list. Each object may be used once, more than once or not at all.

Table 6.1

property	object
electrical conductor	
electrical insulator	
non-magnetic material	a wooden block
magnetic material	
can be charged by rubbing with a cloth	

[4]

(b) Fig. 6.1 shows three measuring instruments.

View solution

Write the name of each measuring instrument next to its diagram.

The measuring instruments are **not** drawn to scale.

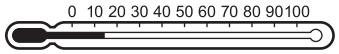

.....

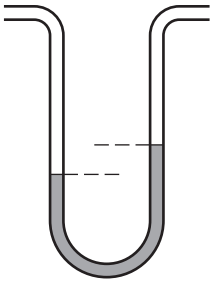

.....



.....

Fig. 6.1

[3]

[Total: 7]

7 **(a)** Fig. 7.1 shows a candle underneath a thin, metal fan.

View solution

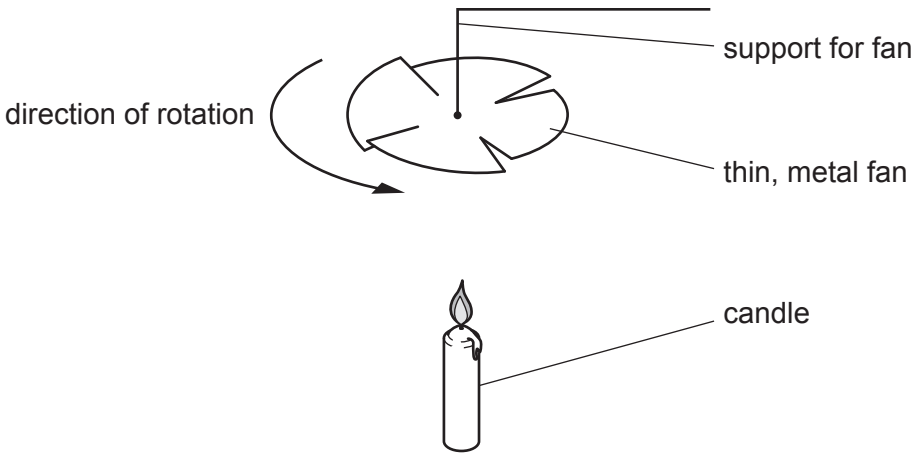

Fig. 7.1

When the candle starts to burn, the fan starts to rotate around its support.

Explain what causes the fan to rotate.

.....

.....

..... [3]

(b) Fig. 7.2 shows a bimetallic strip. It is made of two metals, steel and copper, fastened together.

The bimetallic strip is straight when the temperature is 25 °C.

View solution

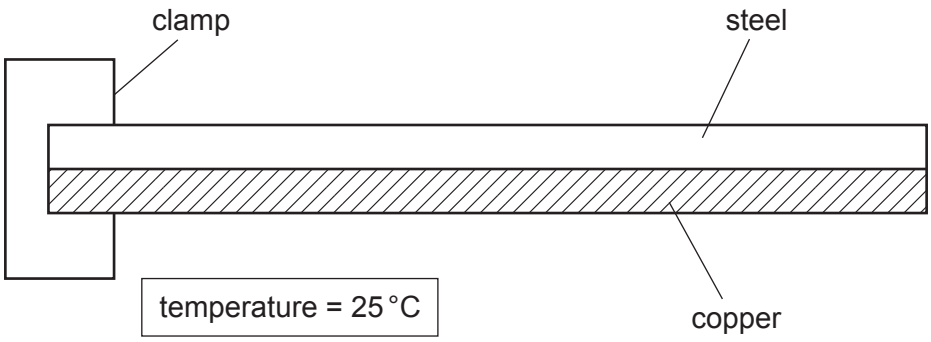

Fig. 7.2

Fig. 7.3 shows the bimetallic strip when the temperature is 40 °C.

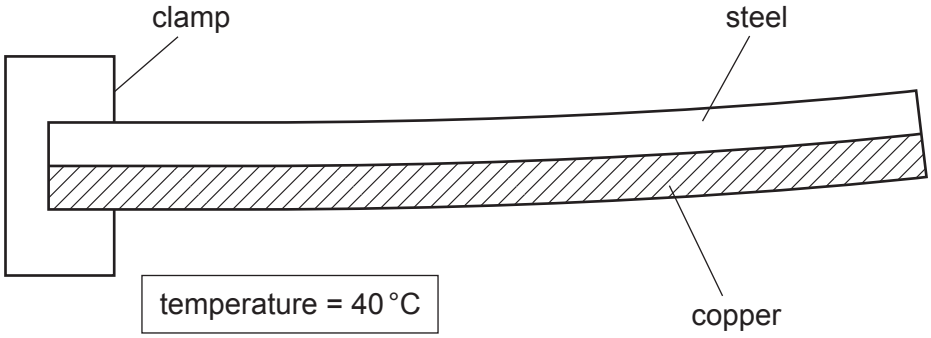

Fig. 7.3

(i) Draw the bimetallic strip when the temperature is 10 °C.

[1]

(ii) The bimetallic strip is used in a circuit, as shown in Fig. 7.4. The circuit is in a room.

View solution

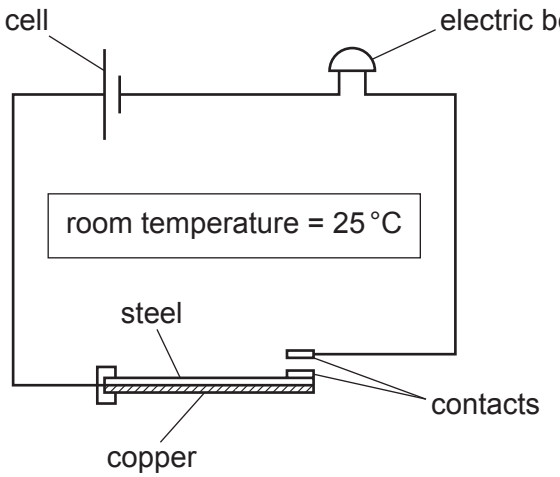

Fig. 7.4

The room temperature is 25 °C.

State and explain any changes in the circuit as the temperature of the room rises above 40 °C.

.....

..... [2]

[Total: 6]

8 Fig. 8.1 shows a simplified diagram of a geothermal power station.

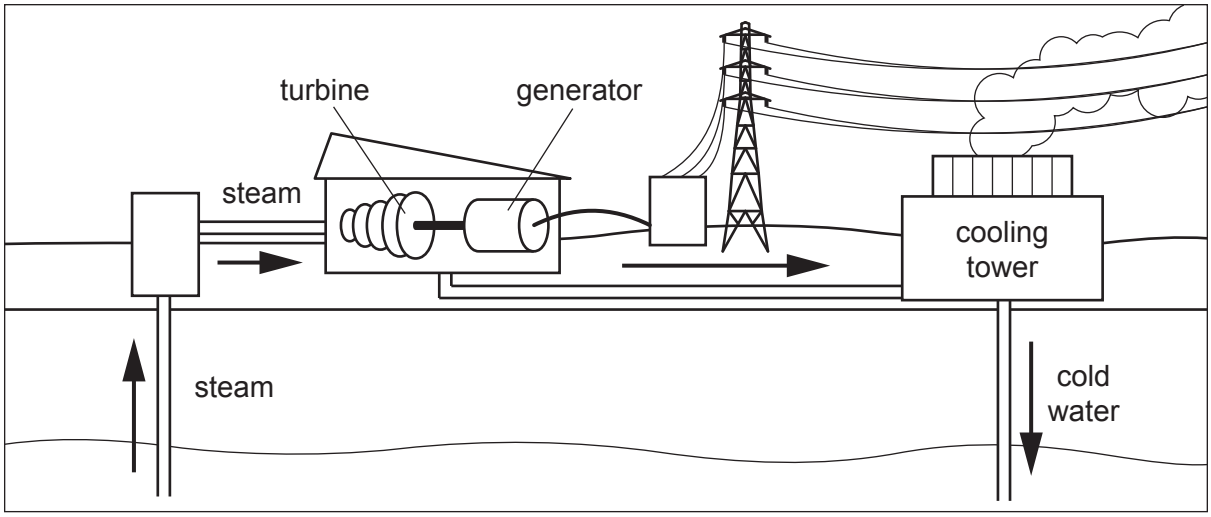

Fig. 8.1

View solution

(a) (i) State the energy source for a geothermal power station. ..... [1]

(ii) Complete the sentence about useful energy transfer in the power station.

View solution

The generator converts ..... energy into ..... energy. [2]

(b) (i) State **two** advantages of a geothermal power station compared to a coal-fired power station.

1 .....

2 ..... [2]

(ii) State **one** disadvantage of using geothermal energy rather than coal in a power station.

..... [1]

[Total: 6]

View solution

9 **(a)** Fig. 9.1 shows a ray of light reflected by a plane mirror.

View solution

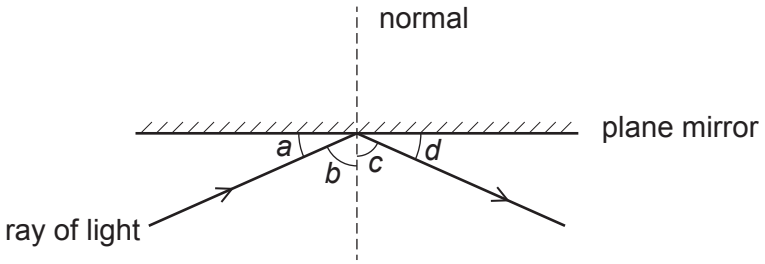

Fig. 9.1

(i) State which angle, *a*, *b*, *c* or *d*, is the angle of incidence. ..... [1]

(ii) State which angle, *a*, *b*, *c* or *d*, is the angle of reflection. ..... [1]

(b) Fig. 9.2 shows a road junction viewed from above. A plane mirror allows the drivers of the two cars A and B to see each other.

View solution

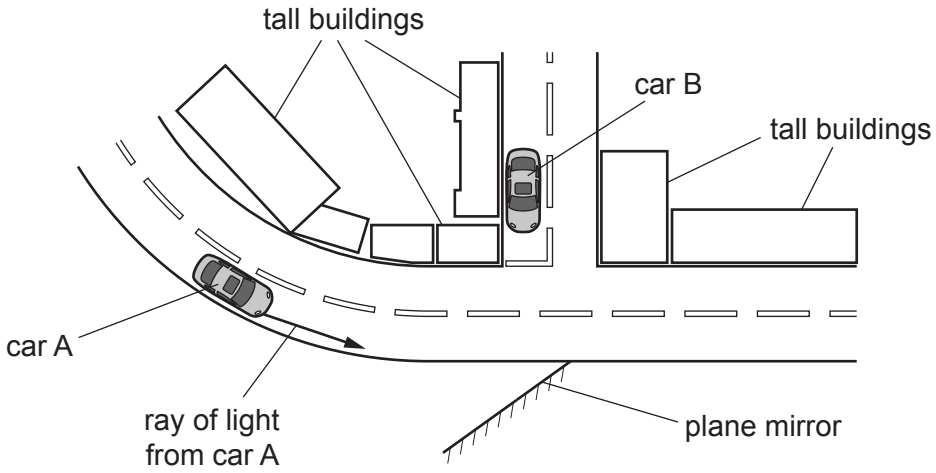

Fig. 9.2

Fig. 9.2 shows a ray of light from car A travelling towards the plane mirror.

On Fig. 9.2, carefully continue this ray to show how the driver of car B can see car A.

[2]

[Total: 4]

10 (a) Fig. 10.1 shows two resistors connected in series with a cell and three ammeters.

View solution

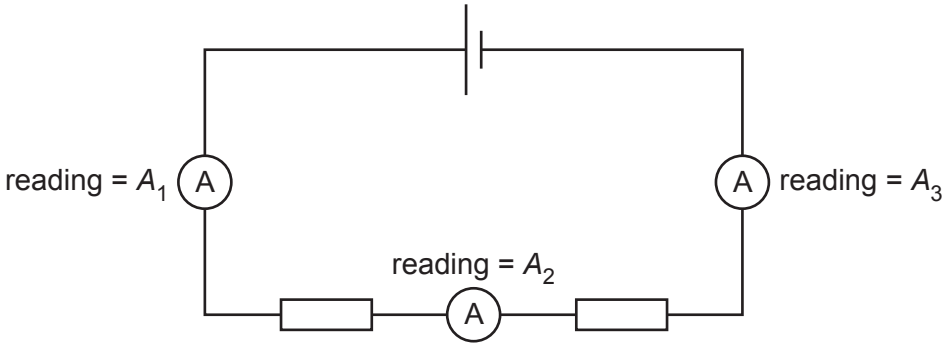

Fig. 10.1

(i) State the physical quantity that an ammeter measures.

..... [1]

(ii) Indicate the correct statement about the readings A_1, A_2 and A_3 on the ammeters in Fig. 10.1.

View solution

Tick **one** box.

A_2 is greater than A_1	
A_2 is less than A_3	
A_1 is equal to A_3	
A_1 is equal to $(A_2 + A_3)$	

[1]

(b) (i) Draw a circuit diagram for a battery connected to two resistors in parallel.

View solution

[2]

(ii) State **one** advantage of connecting lamps in parallel.

..... [1]

(c) Fig. 10.2 shows another circuit.

View solution

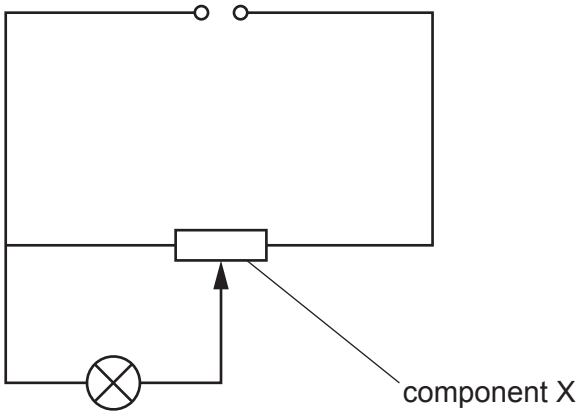

Fig. 10.2

The circuit consists of a power supply, a lamp and component X.

(i) Name component X in Fig. 10.2.

..... [1]

(ii) Suggest **one** use of the circuit.

View solution

..... [1]

(iii) Describe how to use component X and explain its effect on the circuit.

View solution

.....

.....

..... [2]

[Total: 9]

11 (a) Fig. 11.1 shows a magnet and a coil of wire connected to a galvanometer.

View solution

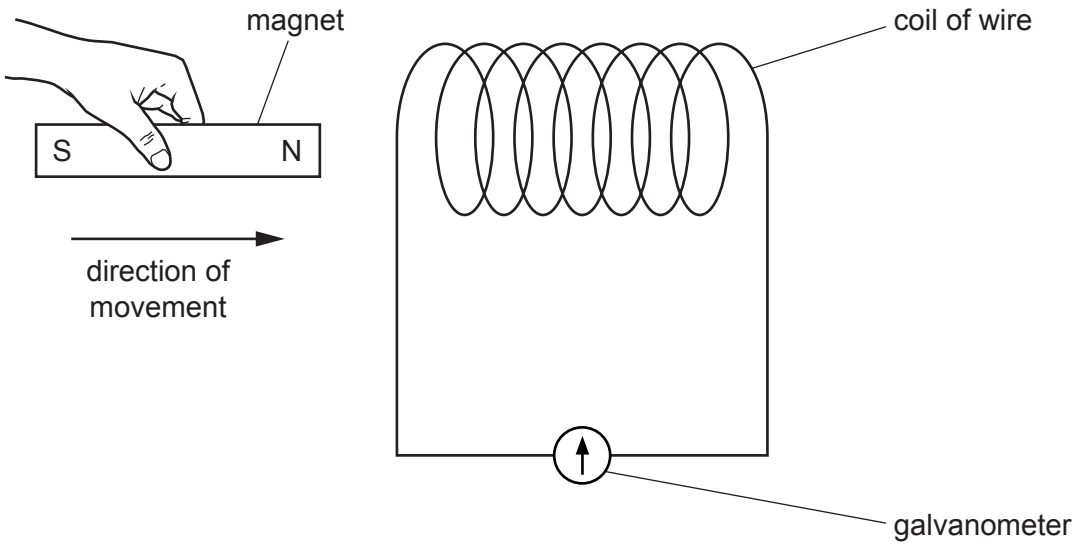

Fig. 11.1

A student slowly moves the magnet into the coil. The pointer on the galvanometer moves to the left. This deflection shows that an electromotive force (e.m.f.) is induced in the coil.

State **three** ways of increasing the size of the e.m.f. in the coil.

1 .....

2 .....

3 .....

[3]

(b) Fig. 11.2 shows a transformer.

View solution

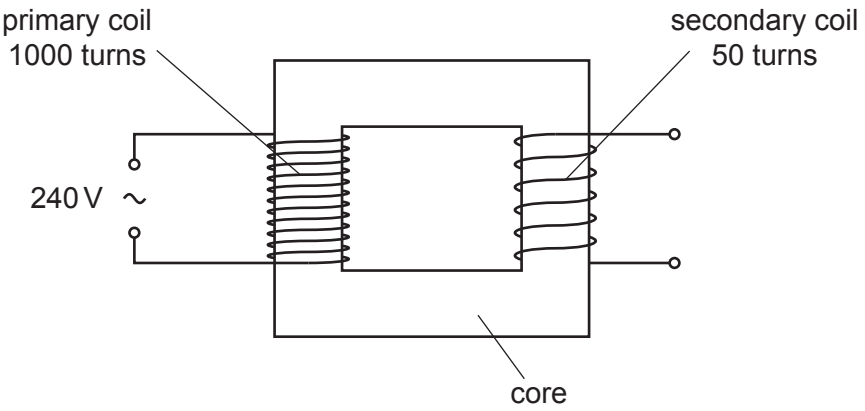

Fig. 11.2

(i) Name **one** material that is suitable for the core of the transformer.

..... [1]

View solution

(ii) The primary coil has 1000 turns and its input is 240 V a.c.
The secondary coil has 50 turns.

Calculate the output voltage across the secondary coil.

output voltage = ... V [3]

[Total: 7]

© UCLES 2021

12 **(a)** State which radioactive emission is:

View solution

(i) the most penetrating ..... [1]

(ii) the most ionising. ..... [1]

(b) Explain the meaning of the term *isotope*.

View solution

.....

..... [2]

(c) The isotope iodine-131 is used in hospitals. A sample of iodine-131 is prepared for use.

View solution

The half-life of iodine-131 is 8 days.

Determine the fraction of iodine-131 remaining in the sample after 16 days.

fraction remaining = ... [2]

[Total: 6]

Permission to reproduce items where third-party owned material protected by copyright is included has been sought and cleared where possible. Every reasonable effort has been made by the publisher (UCLES) to trace copyright holders, but if any items requiring clearance have unwittingly been included, the publisher will be pleased to make amends at the earliest possible opportunity.

To avoid the issue of disclosure of answer-related information to candidates, all copyright acknowledgements are reproduced online in the Cambridge Assessment International Education Copyright Acknowledgements Booklet. This is produced for each series of examinations and is freely available to download at www.cambridgeinternational.org after the live examination series.

Cambridge Assessment International Education is part of the Cambridge Assessment Group. Cambridge Assessment is the brand name of the University of Cambridge Local Examinations Syndicate (UCLES), which itself is a department of the University of Cambridge.

© UCLES 2021