Cambridge Assessment International Education

Cambridge IGCSE™

CANDIDATE NAME									
CENTRE NUMBER						CANDIDATE NUMBER				

PHYSICS **0625/51**

Paper 5 Practical Test **October/November 2021**

1 hour 15 minutes

You must answer on the question paper.

You will need: The materials and apparatus listed in the confidential instructions

INSTRUCTIONS

- Answer **all** questions.
- Use a black or dark blue pen. You may use an HB pencil for any diagrams or graphs.
- Write your name, centre number and candidate number in the boxes at the top of the page.
- Write your answer to each question in the space provided.
- Do **not** use an erasable pen or correction fluid.
- Do **not** write on any bar codes.
- You may use a calculator.
- You should show all your working and use appropriate units.

INFORMATION

- The total mark for this paper is 40.
- The number of marks for each question or part question is shown in brackets [ ].

For Examiner's Use	
1	
2	
3	
4	
Total	

This document has **12** pages. Any blank pages are indicated.

© UCLES 2021

1 In this experiment, you will investigate the stretching of a spring.

Carry out the following instructions, referring to Fig. 1.1.

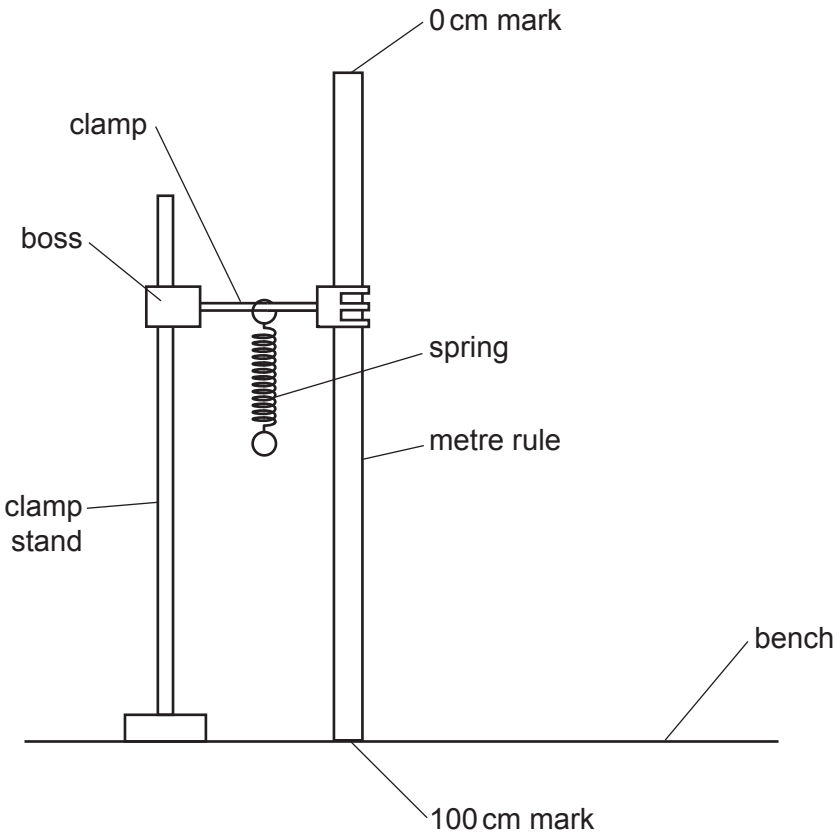

Fig. 1.1

View solution

(a) The metre rule is clamped in position near to the spring. Do **not** change the position of the metre rule.

(i) Write down the scale readings in mm from the metre rule at the top and bottom of the spring.

top reading = ... mm

bottom reading = ... mm
[1]

(ii) Using the two readings, calculate the length l_0 of the spring in mm. Record l_0 in Table 1.1. The value l_0 is the length of the spring when the load L = 0.00 N. [1]

View solution

(b) • Suspend a load L = 0.20 N from the spring. Record the new length l of the spring in Table 1.1.

• Use the equation $e = (l - l_0)$ to calculate the extension e of the spring. Record the value of e in Table 1.1.

• Repeat the procedure using loads L = 0.40 N, L = 0.60 N, L = 0.80 N and L = 1.00 N. Record all the readings and results in the Table 1.1.

View solution

Table 1.1

L / N	l / mm	e / mm
0.00		0
0.20		
0.40		
0.60		
0.80		
1.00		

[3]

(c) Plot a graph of e / mm (y-axis) against L / N (x-axis).

View solution

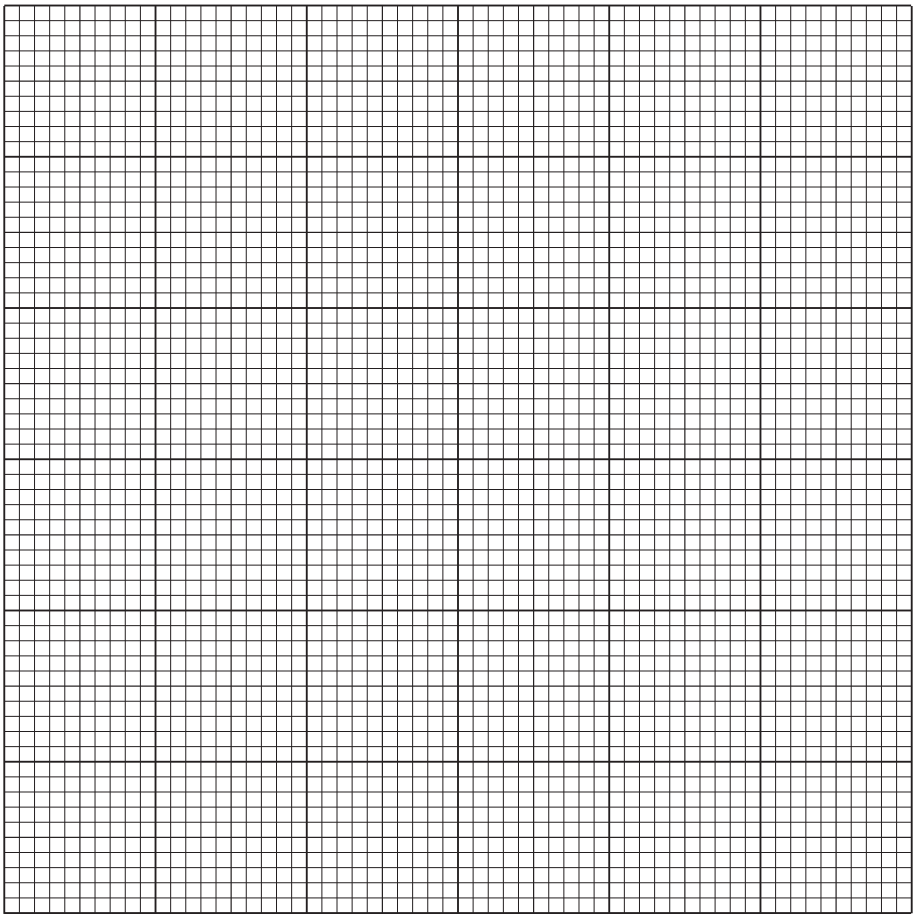

[4]

© UCLES 2021

(d) Fig. 1.2 shows the unstretched spring and the spring with a load. On Fig. 1.2, show clearly the distances l_0, l and e.

View solution

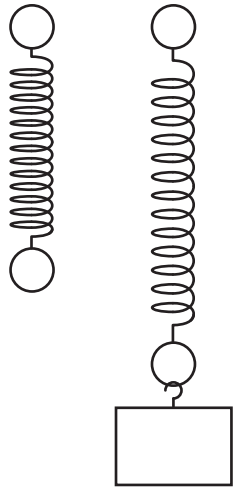

Fig. 1.2

[2]

[Total: 11]

© UCLES 2021

2 In this experiment, you will investigate the resistance of combinations of resistors.

Fig. 2.1 shows the first circuit arrangement. The circuit is set up for you.

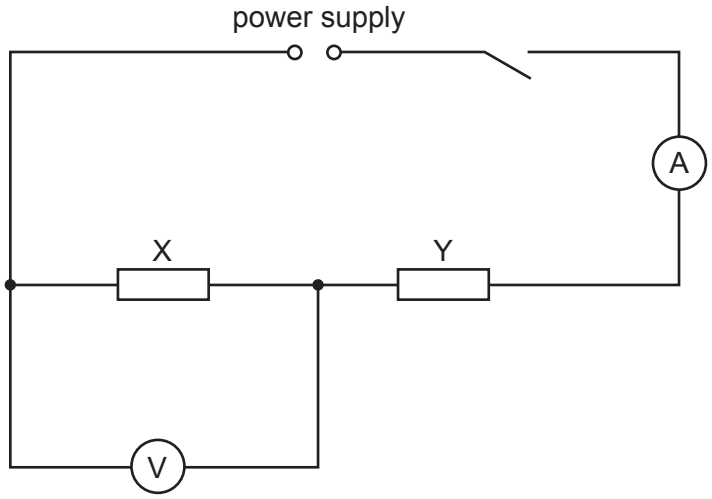

Fig. 2.1

(a) Switch on.

View solution

(i) Record V_X, the potential difference (p.d.) across resistor X.

V_X = ... [1]

(ii) Record I_X, the current in the circuit and then switch off the power supply.

View solution

I_X = ... [1]

(iii) Calculate R_X, the resistance of resistor X, using the equation $R_X = \frac{V_X}{I_X}$.

View solution

R_X = ... [1]

© UCLES 2021

(b) Disconnect the voltmeter.

Reconnect the voltmeter to measure V_{XY}, the potential difference across the two resistors X and Y in series.

View solution

Switch on.

(i) Record V_{XY}.

V_{XY} = ...

Record I_{XY}, the current in the circuit and then switch off the power supply.

I_{XY} = ...
[1]

(ii) Calculate R_{XY}, the combined resistance of resistors X and Y connected in series, using the equation $R_{XY} = \frac{V_{XY}}{I_{XY}}$.

View solution

R_{XY} = ... [1]

(c) Disconnect the voltmeter.

View solution

Connect resistor Z in **parallel** with resistor X.

Connect the voltmeter to measure V_{XZ}, the potential difference across the parallel combination of resistor X and resistor Z.

(i) Draw the circuit diagram for this arrangement. Label the resistors X, Y and Z.

[2]

© UCLES 2021

(ii) Switch on.

View solution

Record V_{XZ}, the potential difference across the two resistors X and Z in parallel.

V_{XZ} = ...

Record I_{XZ}, the current in the circuit and then switch off the power supply.

I_{XZ} = ...
[1]

(iii) Calculate R_{XZ}, the combined resistance of resistors X and Z connected in parallel, using the equation $R_{XZ} = \frac{V_{XZ}}{I_{XZ}}$.

View solution

R_{XZ} = ... [1]

(d) A student does this experiment using a set of three identical resistors. Her results show that, within the limits of experimental accuracy, the combined resistance of two identical resistors connected in series is four times the combined resistance of the same two resistors connected in parallel. To test whether her results are true for other values of resistance, she does the same procedure with other sets of three identical resistors.

Suggest the values of resistance she could use to reach a conclusion during a 1 hour practical lesson.

.....

.....

..... [2]

[Total: 11]

View solution

© UCLES 2021

3 In this experiment you will investigate the position of the image in a plane mirror.

Carry out the following instructions. Use the ray-trace sheet supplied, referring to Fig. 3.1 for guidance.

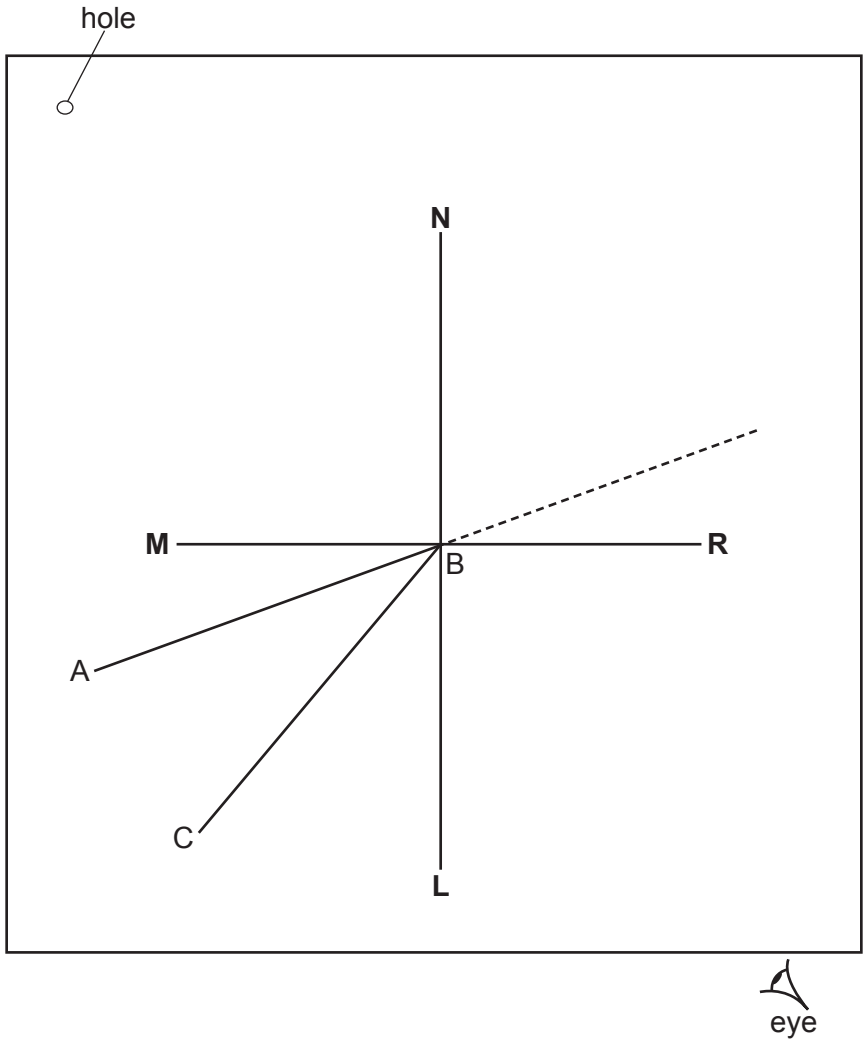

Fig. 3.1

(a) • Draw a line 10 cm long near the middle of the ray-trace sheet. Label the line **MR**. Draw a normal to this line that passes through its centre. Label the normal **NL**. Label the point at which **NL** crosses **MR** with the letter **B**.

• Draw a line 7.0 cm long from **B** at an angle of incidence $i = 70°$ to the normal below **MR** and to the left of the normal. Label the end of this line **A**.

• Draw another line 7.0 cm long from **B** at an angle $\theta = 40°$ to the normal below **MR** and to the left of the normal. Label the end of this line **C**.

[2]

View solution

(b)
- Place the reflecting face of the mirror vertically on the line **MR**.
- Place two pins, P_1 and P_2, on line **AB** at a suitable distance apart for this type of ray-trace experiment. Label the positions of P_1 and P_2.
- View the images of pins P_1 and P_2 from the direction indicated by the eye in Fig. 3.1. Place two pins, P_3 and P_4, so that pins P_3 and P_4 and the images of P_2 and P_1 all appear exactly one behind the other. Label the positions of P_3 and P_4.

[2]

(c) Remove the pins and the mirror. Draw a line through the positions of P_3 and P_4. Continue the line until it meets **MR**.

Measure the angle α between the line and the normal **NL** below **MR**.

View solution

α = ... [1]

(d) Place the reflecting face of the mirror vertically on the line **AB** with the centre of the mirror at **B**.

Place pins P_1 and P_2 on line **CB** at a suitable distance apart for this type of ray-trace experiment.

View the images of pins P_1 and P_2. Place pins P_3 and P_4 so that pins P_3 and P_4 and the images of P_2 and P_1 all appear exactly one behind the other. Label the new positions of P_3 and P_4.

View solution [1]

(e) Remove the pins and the mirror. Draw a line through the new positions of P_3 and P_4. Continue the line until it meets **NL**.

Measure the angle β between the line and **NL** below **MR**.

View solution

β = ... [2]

(f) A student investigates a possible relationship between angles α and β. The angle θ remains constant at $\theta = 40°$. Suggest values of the angle of incidence *i* that he could use.

.....

..... [2]

(g) A student does this experiment with care. Suggest **one** practical reason why the results may **not** be exactly those that the theory of reflection predicts.

.....

..... [1]

Tie your ray-trace sheet into this booklet between pages 8 and 9.

[Total: 11]

View solution

© UCLES 2021

4 A student investigates the time taken to heat water in different uninsulated containers. The containers all have the same volume and shape. The water is heated with an electric immersion heater.

View solution

The following apparatus is available:

a selection of containers
measuring cylinder
thermometer
supply of cold water
immersion heater with power supply.

Plan an experiment to investigate the time taken to heat water in different uninsulated containers.

You are **not** required to carry out this investigation.

You should:

- list any additional apparatus that is required
- explain briefly how you would carry out the investigation
- state the key variables that you would keep constant
- draw a table, or tables, with column headings to show how you would display your readings (you are **not** required to enter any readings in the table)
- explain briefly how you would use your readings to reach a conclusion.

© UCLES 2021

.....

.....

.....

.....

.....

.....

.....

.....

.....

.....

.....

.....

.....

.....

.....

.....

.....

.....

.....

..... [7]

BLANK PAGE

Permission to reproduce items where third-party owned material protected by copyright is included has been sought and cleared where possible. Every reasonable effort has been made by the publisher (UCLES) to trace copyright holders, but if any items requiring clearance have unwittingly been included, the publisher will be pleased to make amends at the earliest possible opportunity.

To avoid the issue of disclosure of answer-related information to candidates, all copyright acknowledgements are reproduced online in the Cambridge Assessment International Education Copyright Acknowledgements Booklet. This is produced for each series of examinations and is freely available to download at www.cambridgeinternational.org after the live examination series.

Cambridge Assessment International Education is part of the Cambridge Assessment Group. Cambridge Assessment is the brand name of the University of Cambridge Local Examinations Syndicate (UCLES), which itself is a department of the University of Cambridge.

© UCLES 2021