Cambridge Assessment International Education

Cambridge IGCSE™

CANDIDATE NAME									
CENTRE NUMBER						CANDIDATE NUMBER				

PHYSICS **0625/52**

Paper 5 Practical Test **October/November 2021**

1 hour 15 minutes

You must answer on the question paper.

You will need: The materials and apparatus listed in the confidential instructions

INSTRUCTIONS

- Answer **all** questions.
- Use a black or dark blue pen. You may use an HB pencil for any diagrams or graphs.
- Write your name, centre number and candidate number in the boxes at the top of the page.
- Write your answer to each question in the space provided.
- Do **not** use an erasable pen or correction fluid.
- Do **not** write on any bar codes.
- You may use a calculator.
- You should show all your working and use appropriate units.

INFORMATION

- The total mark for this paper is 40.
- The number of marks for each question or part question is shown in brackets [ ].

For Examiner's Use	
1	
2	
3	
4	
Total	

This document has **12** pages. Any blank pages are indicated.

© UCLES 2021

1 In this experiment, you will determine the density of a block of wood.

(a) **(i)** Measure the length l, width w and height h of the block of wood.

View solution

l = ... cm

w = ... cm

h = ... cm
[1]

(ii) Calculate the volume V of the block of wood using the equation $V = l \times w \times h$.

V = ... cm^3 [1]

(iii) Measure the mass m of the block of wood using the balance provided.

m = ... g [1]

(iv) Calculate the density ρ of the wood using the equation $\rho = \frac{m}{V}$. Give your answer to a suitable number of significant figures for this experiment and include the unit.

ρ = ... [2]

(b) Place the block of wood, largest face down, carefully in the water in the container.

View solution

(i) Estimate, without taking a measurement, the volume V_1 of wood that is below the water surface.

V_1 = ... cm^3 [1]

(ii) Calculate m_W, the mass of water with volume V_1, using the equation $m_W = \rho_W \times V_1$, where $\rho_W = 1.00$ in the same units as ρ in part **(a)(iv)**.

View solution

m_W = ... [1]

(c) A student suggests that the mass m of the block of wood is equal to the mass m_W of the water with volume V_1.

View solution

(i) Calculate the difference d between your values of m and m_W.

d = ... [1]

(ii) Discuss whether the difference d is small enough to conclude that $m = m_W$.

View solution

.....

.....

..... [1]

© UCLES 2021

(d) Another student wants to obtain a more accurate value for V_1. He uses the method of floating the block of wood in water as described in **(b)**.

View solution

Suggest how the student could obtain a more accurate value by taking a measurement.

You are **not** required to do this part of the experiment.

.....

.....

..... [2]

[Total: 11]

2 In this experiment, you will investigate the resistances of a resistor and a lamp.

Fig. 2.1 shows the first circuit arrangement. The circuit has been set up for you.

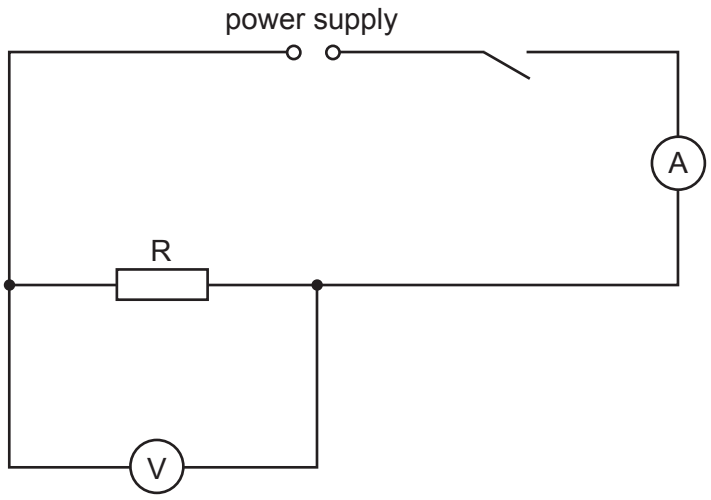

Fig. 2.1

(a) Switch on.

(i) Record V_S, the potential difference (p.d.) across resistor R.

V_S = ... [1]

(ii) Record I_S, the current in the circuit and then switch off the power supply.

I_S = ... [1]

(iii) Calculate R_S, the resistance of resistor R, using the equation $R_S = \frac{V_S}{I_S}$.

R_S = ... [1]

(b)
- Disconnect the voltmeter.
- Replace the resistor with the lamp.
- Connect the voltmeter across the lamp.
- Switch on.

(i) Record V_L, the potential difference across the lamp.

V_L = ...

Record I_L, the current in the circuit and then switch off the power supply.

I_L = ...
[1]

© UCLES 2021

(ii) Calculate R_L, the resistance of the lamp, using the equation $R_L = \frac{V_L}{I_L}$.

View solution

R_L = ... [1]

(c) • Disconnect the voltmeter.

View solution

- Connect the resistor R in series with the lamp.
- Connect the voltmeter to record V_C, the potential difference across the series combination of the resistor and the lamp.

(i) Draw the circuit diagram for this arrangement.

[2]

(ii) Switch on. Record V_C, the potential difference across the resistor and the lamp in series.

V_C = ...

Record I_C, the current in the circuit and then switch off the power supply.

View solution

I_C = ...

[1]

(iii) Calculate R_C, the combined resistance of the resistor and the lamp connected in series, using the equation $R_C = \frac{V_C}{I_C}$.

View solution

R_C = ... [1]

© UCLES 2021

(d) State and explain briefly whether your results show that $R_S + R_L = R_C$ within the limits of experimental accuracy.

statement .....

explanation .....

.....

[2]

[Total: 11]

View solution

3 In this experiment, you will investigate the image produced by a lens.

Carry out the following instructions, referring to Fig. 3.1.

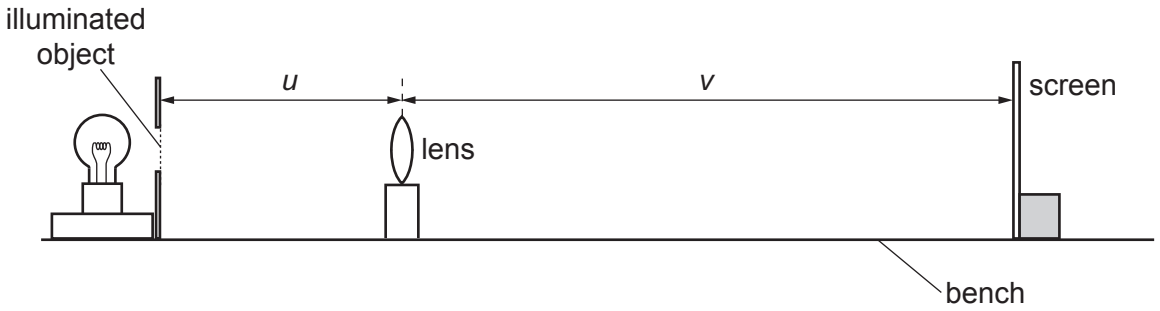

Fig. 3.1

View solution

(a) • Place the lens a distance u = 20.0 cm from the illuminated object.

• Move the screen until a clearly focused image is formed on the screen.

• Measure the distance v between the centre of the lens and the screen.

(i) Record v in Table 3.1. [1]

(ii) Calculate, and record in Table 3.1, $\frac{u}{v}$. [1]

(iii) Repeat the procedure for u = 25.0 cm, u = 30.0 cm, u = 35.0 cm and u = 40.0 cm. [1]

Table 3.1

u / cm	v / cm	$\frac{u}{v}$
20.0		
25.0		
30.0		
35.0		
40.0		

© UCLES 2021

(b) Plot a graph of u / cm (y-axis) against $\frac{u}{v}$ (x-axis). Start the y-axis at u = 15.0 cm.

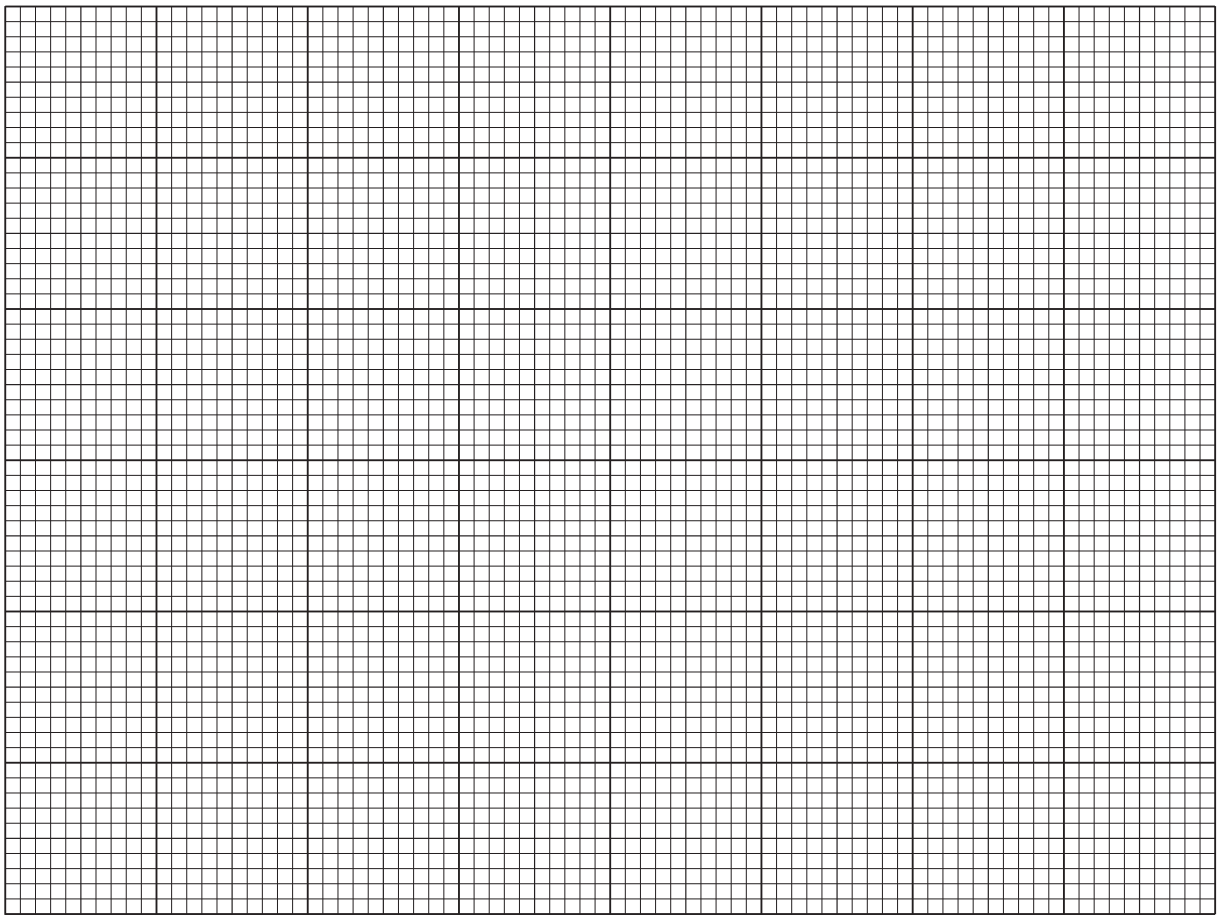

View solution [4]

(c) Use your graph to find the value of u when $\frac{u}{v}$ = 1.0. Show clearly on the graph how you obtained the necessary information.

View solution u = ... [2]

(d) Suggest **one** practical difficulty with this experiment. Explain briefly how you would try to overcome this difficulty in order to obtain accurate results.

suggestion .....

.....

explanation .....

.....

.....

[2]

[Total: 11]

View solution

© UCLES 2021

4 A student investigates the strengths of wires made from different metals by measuring the force required to break the wires.

The apparatus is shown in Fig. 4.1. A wire is held by a clamp at one end and a load is suspended from the other end. The load is increased until the wire breaks. The student takes all the necessary safety precautions.

View solution

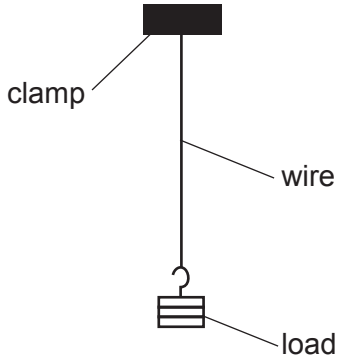

Fig. 4.1

Plan an experiment to investigate the force required to break wires made from different metals. You are **not** required to do the investigation.

The following apparatus is available:

clamps and stands
a selection of masses with a suitable hanger
metre rule
a selection of wires made from different metals.

You can also use other apparatus and materials that are usually available in a school laboratory.

In your plan, you should:

- write a list of suitable metals for the wires you would investigate
- explain briefly how you would do the investigation
- state the key variables that you would keep constant
- draw a table, or tables, with column headings, to show how you would display your readings (you are **not** required to enter any readings in the table)
- explain how you would use the results to reach a conclusion.

© UCLES 2021

You may add to the diagram if it helps your explanation.

You are **not** required to write about the safety precautions that the student should take.

.....

.....

.....

.....

.....

.....

.....

.....

.....

.....

.....

.....

.....

.....

.....

.....

.....

.....

.....

..... [7]

BLANK PAGE

BLANK PAGE

Permission to reproduce items where third-party owned material protected by copyright is included has been sought and cleared where possible. Every reasonable effort has been made by the publisher (UCLES) to trace copyright holders, but if any items requiring clearance have unwittingly been included, the publisher will be pleased to make amends at the earliest possible opportunity.

To avoid the issue of disclosure of answer-related information to candidates, all copyright acknowledgements are reproduced online in the Cambridge Assessment International Education Copyright Acknowledgements Booklet. This is produced for each series of examinations and is freely available to download at www.cambridgeinternational.org after the live examination series.

Cambridge Assessment International Education is part of the Cambridge Assessment Group. Cambridge Assessment is the brand name of the University of Cambridge Local Examinations Syndicate (UCLES), which itself is a department of the University of Cambridge.

© UCLES 2021