Cambridge Assessment International Education

Cambridge IGCSE™

CANDIDATE NAME									
CENTRE NUMBER						CANDIDATE NUMBER				

PHYSICS **0625/61**

Paper 6 Alternative to Practical **October/November 2021**

1 hour

You must answer on the question paper.

No additional materials are needed.

INSTRUCTIONS

- Answer **all** questions.
- Use a black or dark blue pen. You may use an HB pencil for any diagrams or graphs.
- Write your name, centre number and candidate number in the boxes at the top of the page.
- Write your answer to each question in the space provided.
- Do **not** use an erasable pen or correction fluid.
- Do **not** write on any bar codes.
- You may use a calculator.
- You should show all your working and use appropriate units.

INFORMATION

- The total mark for this paper is 40.
- The number of marks for each question or part question is shown in brackets [ ].

This document has **12** pages. Any blank pages are indicated.

© UCLES 2021

1 A student investigates the stretching of a spring.

Fig. 1.1 shows the apparatus.

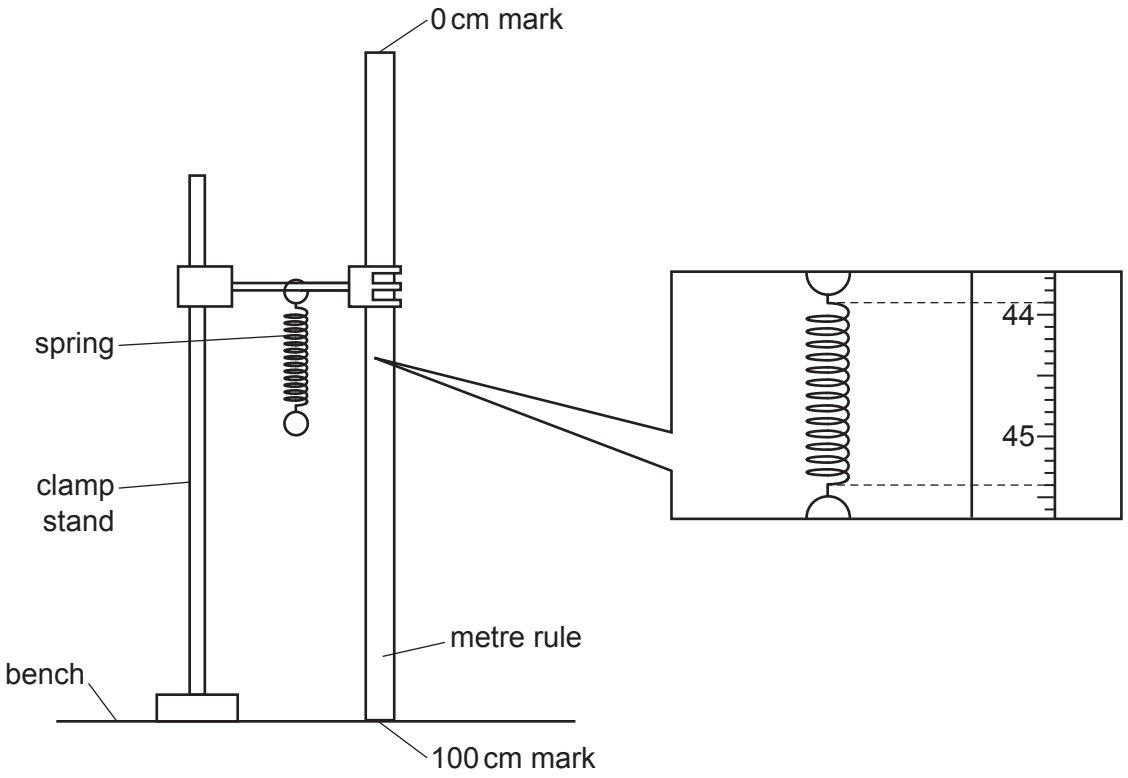

Fig. 1.1

View solution

(a) The metre rule is clamped in position near to the spring.

(i) Write down the scale readings in mm from the metre rule at the top and bottom of the spring, as shown in Fig. 1.1.

top reading = ... mm

bottom reading = ... mm
[2]

(ii) Using the two readings, calculate the length l_0 of the spring in mm. Record l_0 in Table 1.1. The value l_0 is the length of the spring when the load L = 0.00 N. [1]

(b) The student suspends a load L = 0.20 N from the spring. He records the new length l of the spring in Table 1.1.

(i) Use the equation $e = (l - l_0)$ to calculate the extension e of the spring. Record the value of e in Table 1.1. [1]

View solution

(ii) Complete the extension column heading in Table 1.1. [1]

(c) The student repeats the procedure using loads $L = 0.40\,\text{N}$, $L = 0.60\,\text{N}$, $L = 0.80\,\text{N}$ and $L = 1.00\,\text{N}$. He records the readings and results in Table 1.1.

View solution

Table 1.1

L/N	l/mm	e/
0.00		0
0.20	17	
0.40	20	5
0.60	23	8
0.80	25	10
1.00	28	13

Plot a graph of e/mm (y-axis) against L/N (x-axis).

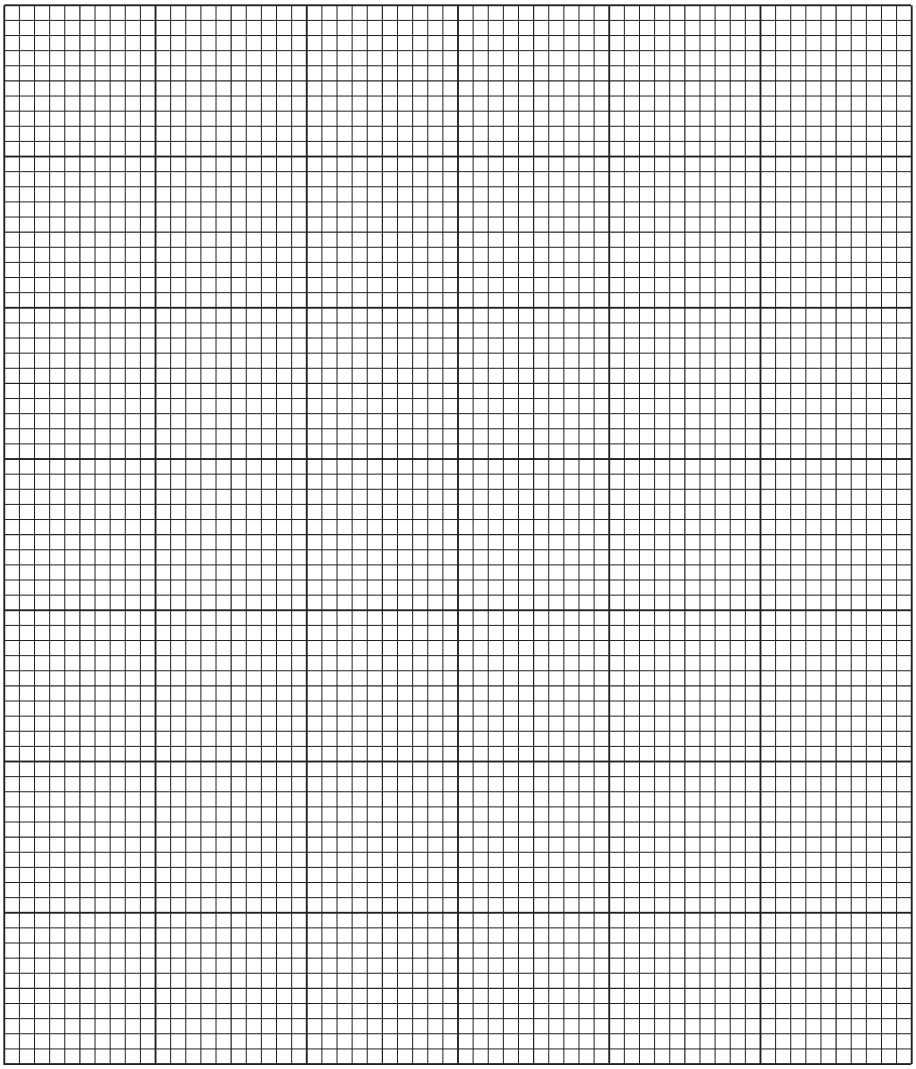

[4]

(d) Fig. 1.2 shows the unstretched spring and the spring with a load. On Fig. 1.2, show clearly the distances l_0, l and e.

View solution

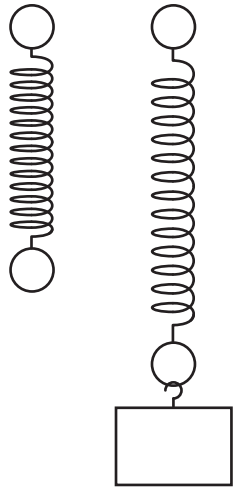

Fig. 1.2

[2]

[Total: 11]

© UCLES 2021

2 A student investigates the resistance of resistors in different circuit arrangements.

Fig. 2.1 shows the first circuit arrangement.

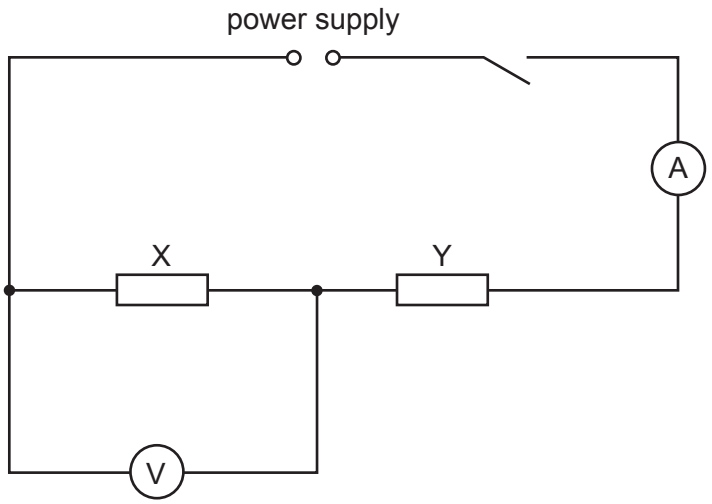

Fig. 2.1

(a) She measures the potential difference (p.d.) V_X across the resistor X and the current I_X in the circuit. The meters are shown in Fig. 2.2 and Fig. 2.3.

(i) Write down the readings. Include the units for potential difference, current or resistance where appropriate in all parts of the question.

View solution

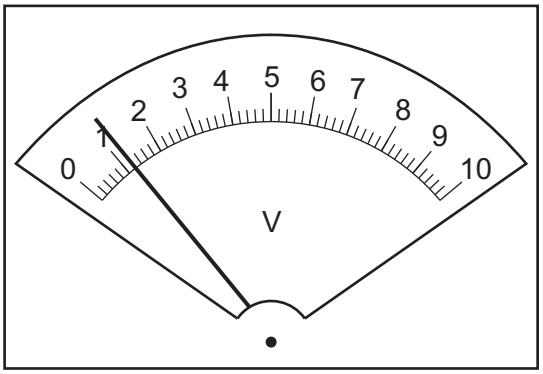

Fig. 2.2

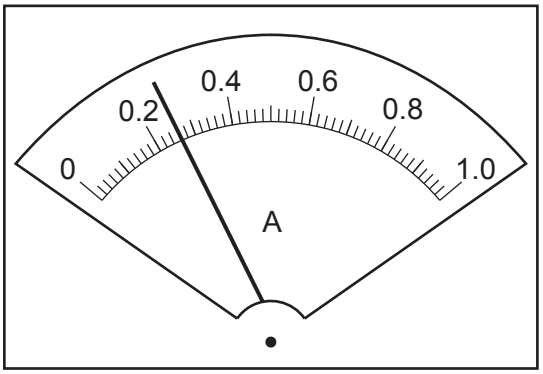

Fig. 2.3

V_X = ...

I_X = ...

[2]

(ii) Calculate R_X, the resistance of resistor X, using the equation $R_X = \frac{V_X}{I_X}$.

View solution

R_X = ... [2]

(b) The student connects the voltmeter to record V_{XY}, the potential difference across the two resistors X and Y in series. She calculates R_{XY}, the combined resistance of resistors X and Y connected in series.

R_{XY} = 10.4 .....

She calculates the resistance R_Y of resistor Y.

View solution

R_Y = 5.78 .....

State and explain whether R_X and R_Y can be considered to be equal within the limits of experimental accuracy.

.....

.....

..... [1]

(c) The student connects a resistor Z in **parallel** with resistor X. She connects the voltmeter to record V_{XZ}, the potential difference across the parallel combination of resistor X and resistor Z.

Draw the circuit diagram for this arrangement. Label the resistors X, Y and Z.

View solution

[3]

(d) The student records V_{XZ}, the potential difference across the two resistors X and Z in parallel, and I_{XZ}, the current in the circuit.

V_{XZ} = 0.8 .....

I_{XZ} = 0.36 .....

Calculate R_{XZ}, the combined resistance of resistors X and Z connected in parallel, using the equation $R_{XZ} = \frac{V_{XZ}}{I_{XZ}}$. Give your answer to 2 significant figures.

View solution

R_{XZ} = ... [1]

© UCLES 2021

(e) Another student does this experiment using a set of three identical resistors. His results show that, within the limits of experimental accuracy, the combined resistance of two identical resistors connected in series is four times the combined resistance of the same two resistors connected in parallel. To test whether his results are true for other values of resistance, he does the same procedure with other sets of three identical resistors.

Suggest the values of resistance he could use to reach a conclusion during a 1 hour practical lesson.

.....

.....

..... [2]

[Total: 11]



View solution

3 A student investigates the position of the image in a plane mirror.

Fig. 3.1 shows the ray-trace sheet.

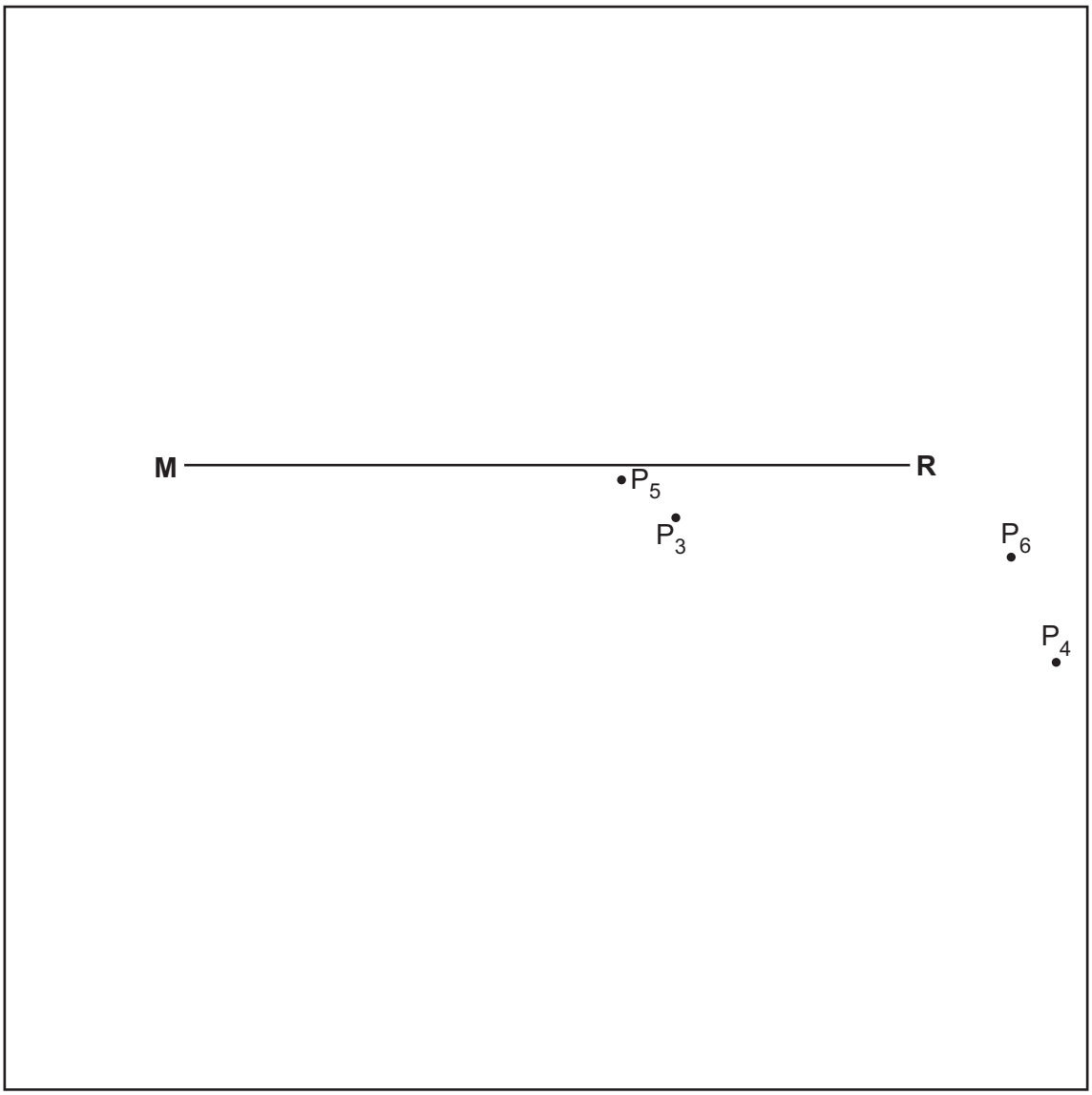

Fig. 3.1

View solution

(a) • On Fig. 3.1, draw a normal to the line **MR** that passes through its centre. Label the normal **NL**. Label the point at which **NL** crosses **MR** with the letter **B**.

• Draw a line 7.0 cm long from **B** at an angle of incidence $i = 70°$ to the normal below **MR** and to the left of the normal. Label the end of this line **A**.

• Draw another line 7.0 cm long from **B** at an angle $\theta = 40°$ to the normal below **MR** and to the left of the normal. Label the end of this line **C**.

[3]

(b) Mark, with two neat crosses, positions for two pins, P_1 and P_2, on line **AB** at a suitable distance apart for this type of ray-trace experiment. [1]

View solution

© UCLES 2021

(c) The student places a plane mirror on line **MR** and views the images of pins P_1 and P_2 in the mirror. He places two pins, P_3 and P_4, so that pins P_3 and P_4 and the images of P_2 and P_1 all appear exactly one behind the other. The positions of P_3 and P_4 are marked on Fig. 3.1.

View solution

Draw a line through the positions of P_3 and P_4. Continue the line until it meets **MR**.

Measure the angle α between the line and the normal **NL** below **MR**. Include the unit.

α = ... [1]

(d) The student places the reflecting face of the mirror vertically on the line **AB** with the centre of the mirror at **B**.

He places pins P_1 and P_2 on line **CB**. He places pins P_5 and P_6 so that pins P_5 and P_6 and the images of P_2 and P_1 all appear exactly one behind the other.

View solution

Draw a line through the positions of P_5 and P_6. Continue the line until it meets **NL**.

Measure the angle β between the line and **NL** below **MR**. Include the unit.

β = ... [1]

(e) A student investigates a possible relationship between angles α and β. The angle θ remains constant at $\theta = 40°$. Suggest values of the angle of incidence *i* that he could use.

.....

..... [2]

(f) A student does this experiment with care. Suggest **one** practical reason why the results may **not** be exactly those that the theory of reflection predicts.

.....

..... [1]

(g) Tick the boxes that indicate relevant precautions that the student should take with this type of ray-trace experiment.

View solution

- ☐ carry out the experiment in a darkened room
- ☐ draw thin lines
- ☐ keep one eye closed
- ☐ keep room temperature constant
- ☐ view the bases of the pins
- ☐ view the tops of the pins

[2]

[Total: 11]

© UCLES 2021

4 A student investigates the time taken to heat water in different uninsulated containers. The containers all have the same volume and shape. The water is heated with an electric immersion heater.

View solution

The following apparatus is available:

a selection of containers
measuring cylinder
thermometer
supply of cold water
immersion heater with power supply.

Plan an experiment to investigate the time taken to heat water in different uninsulated containers.

You should:

- list any additional apparatus that is required
- explain briefly how you would carry out the investigation
- state the key variables that you would keep constant
- draw a table, or tables, with column headings to show how you would display your readings (you are **not** required to enter any readings in the table)
- explain briefly how you would use your readings to reach a conclusion.

© UCLES 2021

.....

.....

.....

.....

.....

.....

.....

.....

.....

.....

.....

.....

.....

.....

.....

.....

.....

.....

..... [7]

BLANK PAGE

Permission to reproduce items where third-party owned material protected by copyright is included has been sought and cleared where possible. Every reasonable effort has been made by the publisher (UCLES) to trace copyright holders, but if any items requiring clearance have unwittingly been included, the publisher will be pleased to make amends at the earliest possible opportunity.

To avoid the issue of disclosure of answer-related information to candidates, all copyright acknowledgements are reproduced online in the Cambridge Assessment International Education Copyright Acknowledgements Booklet. This is produced for each series of examinations and is freely available to download at www.cambridgeinternational.org after the live examination series.

Cambridge Assessment International Education is part of the Cambridge Assessment Group. Cambridge Assessment is the brand name of the University of Cambridge Local Examinations Syndicate (UCLES), which itself is a department of the University of Cambridge.

© UCLES 2021