Cambridge Assessment International Education

Cambridge IGCSE™

CANDIDATE NAME									
CENTRE NUMBER						CANDIDATE NUMBER				

PHYSICS **0625/62**

Paper 6 Alternative to Practical **October/November 2021**

1 hour

You must answer on the question paper.

No additional materials are needed.

INSTRUCTIONS

- Answer **all** questions.
- Use a black or dark blue pen. You may use an HB pencil for any diagrams or graphs.
- Write your name, centre number and candidate number in the boxes at the top of the page.
- Write your answer to each question in the space provided.
- Do **not** use an erasable pen or correction fluid.
- Do **not** write on any bar codes.
- You may use a calculator.
- You should show all your working and use appropriate units.

INFORMATION

- The total mark for this paper is 40.
- The number of marks for each question or part question is shown in brackets [ ].

This document has **12** pages. Any blank pages are indicated.

© UCLES 2021

1 A student determines the density of a block of wood.

(a) Fig. 1.1 shows one face of the block of wood that the student uses.

View solution

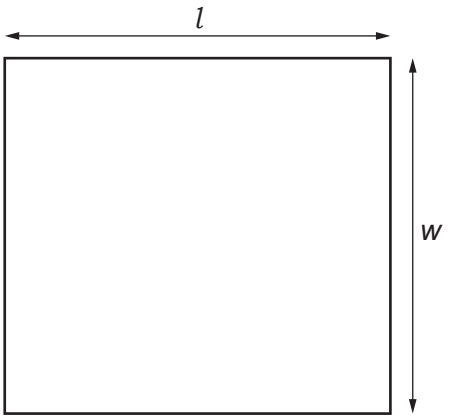

Fig. 1.1

(i) Measure the length l and width w of the block of wood. Fig. 1.1 is drawn actual size.

l = ... cm

w = ... cm [1]

(ii) The student measures the height h of the block of wood.

View solution

h = 4.0 ..... cm

Calculate the volume V of the block of wood using the equation $V = l \times w \times h$.

V = ... cm^3 [1]

(iii) The student measures the mass m of the block of wood on a balance.

View solution

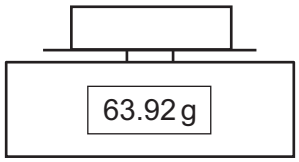

Fig. 1.2

Write down the mass m of the block as shown in Fig. 1.2. Give your answer to the nearest gram.

m = ... g [1]

© UCLES 2021

(iv) Calculate the density ρ of the wood using the equation $\rho = \frac{m}{V}$. Give your answer to a suitable number of significant figures for this experiment and include the unit.

View solution

ρ = ... [2]

(b) The student places the block of wood carefully in water in a glass dish. The wood floats as shown in Fig. 1.3.

View solution

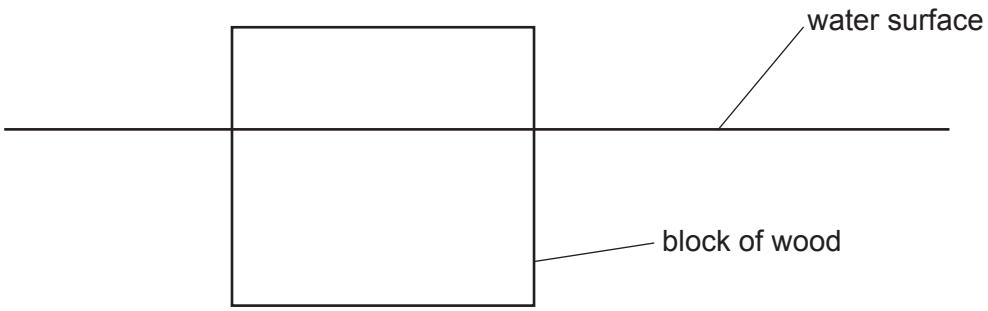

Fig. 1.3

(i) Using Fig. 1.3, estimate, without taking a measurement, the volume V_1 of wood that is below the water surface.

V_1 = ... cm^3 [1]

(ii) Calculate m_W, the mass of water with volume V_1, using the equation $m_W = \rho_W \times V_1$, where $\rho_W = 1.00$ in the same units as ρ in part **(a)(iv)**.

View solution

m_W = ... [1]

(c) A student suggests that the mass m of the block of wood should be equal to the mass m_W of the water with volume V_1.

(i) Calculate the difference d between your values of m and m_W.

View solution

d = ... [1]

(ii) Discuss whether the difference d is small enough to conclude that $m = m_W$.

View solution

.....

.....

..... [1]

(d) Another student wants to obtain a more accurate value for V_1. He uses the method of floating the block of wood in water as described in **(b)**.

Suggest how the student could obtain a more accurate value by taking a measurement.

View solution

.....

.....

..... [2]

[Total: 11]

2 A student investigates the resistances of a resistor and a lamp.

Fig. 2.1 shows the first circuit arrangement.

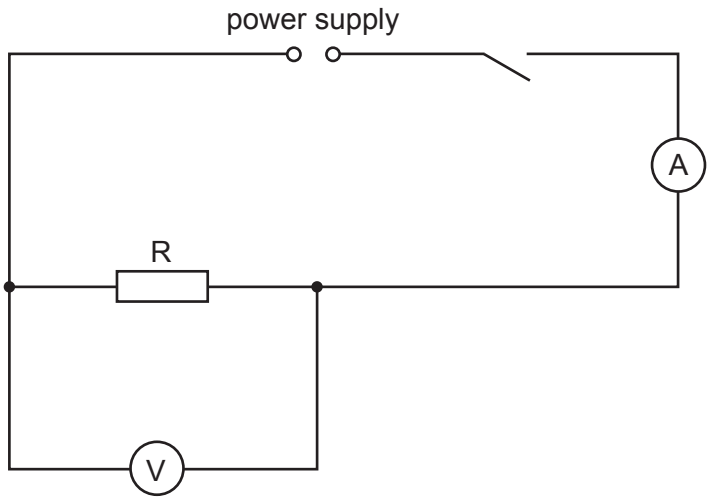

Fig. 2.1

(a) She records V_S, the potential difference (p.d.) across the resistor R, and the current I_S in the circuit. The meters are shown in Fig. 2.2 and Fig. 2.3.

(i) Write down the readings. Include the units for potential difference, current or resistance where appropriate in all parts of the question.

View solution

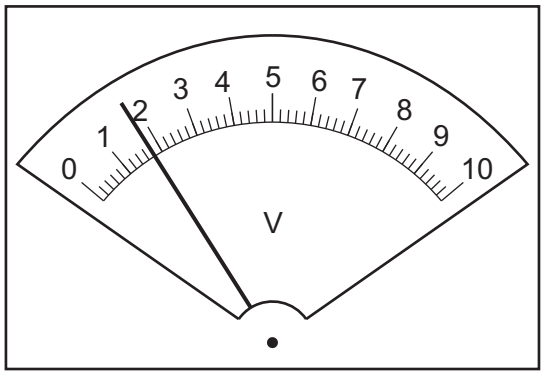

Fig. 2.2

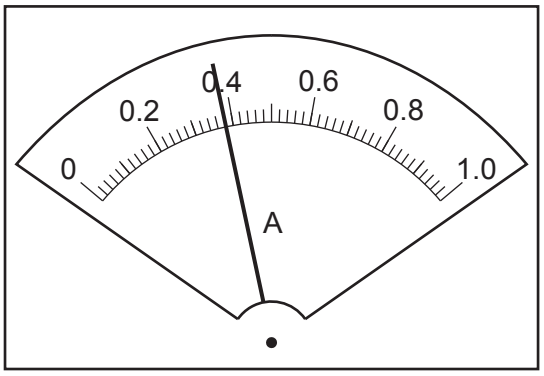

Fig. 2.3

V_S = ...

I_S = ...
[2]

(ii) Calculate R_S, the resistance of resistor R, using the equation $R_S = \frac{V_S}{I_S}$.

View solution

R_S = ... [2]

(b) The student replaces the resistor with the lamp. She records V_L the potential difference across the lamp and the current I_L in the circuit.

V_L = 1.7

I_L = 0.35

Calculate R_L, the resistance of the lamp, using the equation $R_L = \frac{V_L}{I_L}$.

View solution

R_L = ... [2]

(c) The student connects the resistor R in series with the lamp. She connects the voltmeter to record V_C, the potential difference across the series combination of the resistor and the lamp. Draw the circuit diagram for this arrangement.

View solution

[2]

(d) The student records V_C the potential difference across the resistor and the lamp in series and the current I_C in the circuit.

V_C = 1.7

I_C = 0.21

Calculate R_C, the combined resistance of the resistor and the lamp connected in series, using the equation $R_C = \frac{V_C}{I_C}$.

View solution

R_C = ... [1]

© UCLES 2021

(e) State and explain briefly whether the results show that $R_S + R_L = R_C$ within the limits of experimental accuracy.

statement .....

explanation .....

.....

[2]

[Total: 11]

View solution

3 A student investigates the image produced by a lens.

Fig. 3.1 shows the apparatus.

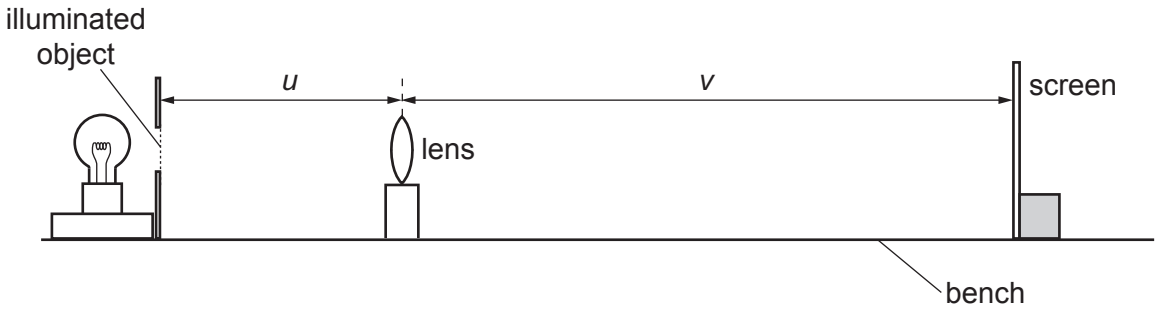

Fig. 3.1

View solution

(a)
- The student places the lens a distance u = 20.0 cm from the illuminated object.
- He moves the screen until a clearly focused image is formed on the screen.
- He measures the distance v between the centre of the lens and the screen.
- Calculate, and record in the first row of Table 3.1, $\frac{u}{v}$.
- He repeats the procedure for u = 25.0 cm, u = 30.0 cm, u = 35.0 cm and u = 40.0 cm. The readings and results are shown in Table 3.1.

Table 3.1

u / cm	v / cm	$\frac{u}{v}$
20.0	79.5	
25.0	44.5	0.56
30.0	35.0	0.86
35.0	30.0	1.17
40.0	27.0	1.48

[1]

(b) Plot a graph of u / cm (y-axis) against $\frac{u}{v}$ (x-axis). Start the y-axis at u = 15.0 cm.

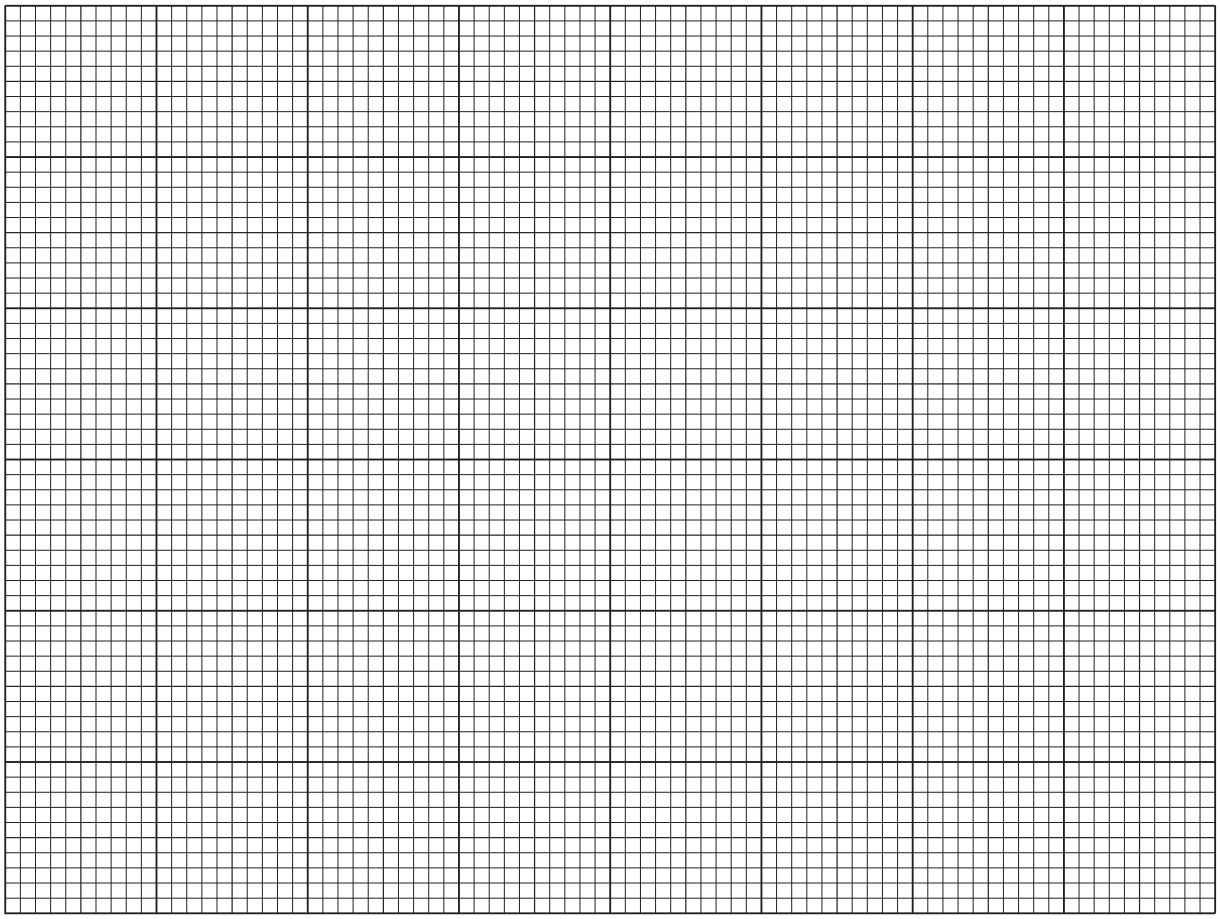

View solution [4]

(c) Use your graph to find u_1, the value of u when $\frac{u}{v}$ = 1.0. Show clearly on the graph how you obtained the necessary information.

View solution u_1 = ... [2]

(d) Calculate the focal length f of the lens using the equation $f = \frac{u_1}{2}$. Give your answer to a suitable number of significant figures for this experiment.

View solution f = ... cm [2]

(e) Suggest **one** practical difficulty with this experiment. Explain briefly how you would try to overcome this difficulty in order to obtain accurate results.

suggestion .....

.....

explanation .....

.....

.....

[2]

[Total: 11]

© UCLES 2021

4 A student investigates the strengths of wires made from different metals by measuring the force required to break the wires.

The apparatus is shown in Fig. 4.1. A wire is held by a clamp at one end and a load is suspended from the other end. The load is increased until the wire breaks. The student takes all the necessary safety precautions.

View solution

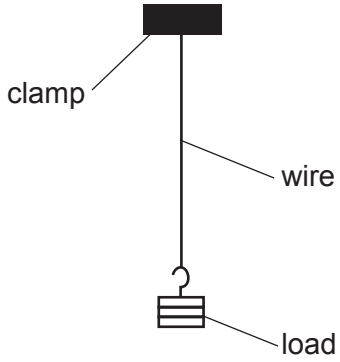

Fig. 4.1

Plan an experiment to investigate the force required to break wires made from different metals.

The following apparatus is available:

clamps and stands
a selection of masses with a suitable hanger
metre rule
a selection of wires made from different metals.

You can also use other apparatus and materials that are usually available in a school laboratory.

In your plan, you should:

- write a list of suitable metals for the wires you would investigate
- explain briefly how you would do the investigation
- state the key variables that you would keep constant
- draw a table, or tables, with column headings, to show how you would display your readings (you are **not** required to enter any readings in the table)
- explain how you would use the results to reach a conclusion.

© UCLES 2021

You may add to the diagram if it helps your explanation.

You are **not** required to write about the safety precautions that the student should take.

.....

.....

.....

.....

.....

.....

.....

.....

.....

.....

.....

.....

.....

.....

.....

.....

.....

.....

.....

..... [7]

BLANK PAGE

Permission to reproduce items where third-party owned material protected by copyright is included has been sought and cleared where possible. Every reasonable effort has been made by the publisher (UCLES) to trace copyright holders, but if any items requiring clearance have unwittingly been included, the publisher will be pleased to make amends at the earliest possible opportunity.

To avoid the issue of disclosure of answer-related information to candidates, all copyright acknowledgements are reproduced online in the Cambridge Assessment International Education Copyright Acknowledgements Booklet. This is produced for each series of examinations and is freely available to download at www.cambridgeinternational.org after the live examination series.

Cambridge Assessment International Education is part of the Cambridge Assessment Group. Cambridge Assessment is the brand name of the University of Cambridge Local Examinations Syndicate (UCLES), which itself is a department of the University of Cambridge.

© UCLES 2021