Cambridge Assessment International Education

Cambridge IGCSE™

CANDIDATE NAME									
CENTRE NUMBER						CANDIDATE NUMBER				

PHYSICS **0625/63**

Paper 6 Alternative to Practical **October/November 2021**

1 hour

You must answer on the question paper.

No additional materials are needed.

INSTRUCTIONS

- Answer **all** questions.
- Use a black or dark blue pen. You may use an HB pencil for any diagrams or graphs.
- Write your name, centre number and candidate number in the boxes at the top of the page.
- Write your answer to each question in the space provided.
- Do **not** use an erasable pen or correction fluid.
- Do **not** write on any bar codes.
- You may use a calculator.
- You should show all your working and use appropriate units.

INFORMATION

- The total mark for this paper is 40.
- The number of marks for each question or part question is shown in brackets [ ].

This document has **16** pages. Any blank pages are indicated.

© UCLES 2021

BLANK PAGE

1 A student investigates the effect of insulation on the cooling of water.

She uses the apparatus shown in Fig. 1.1.

The sides of beaker A are covered with material that is a thermal insulator.

Beaker B has no covering on its sides.

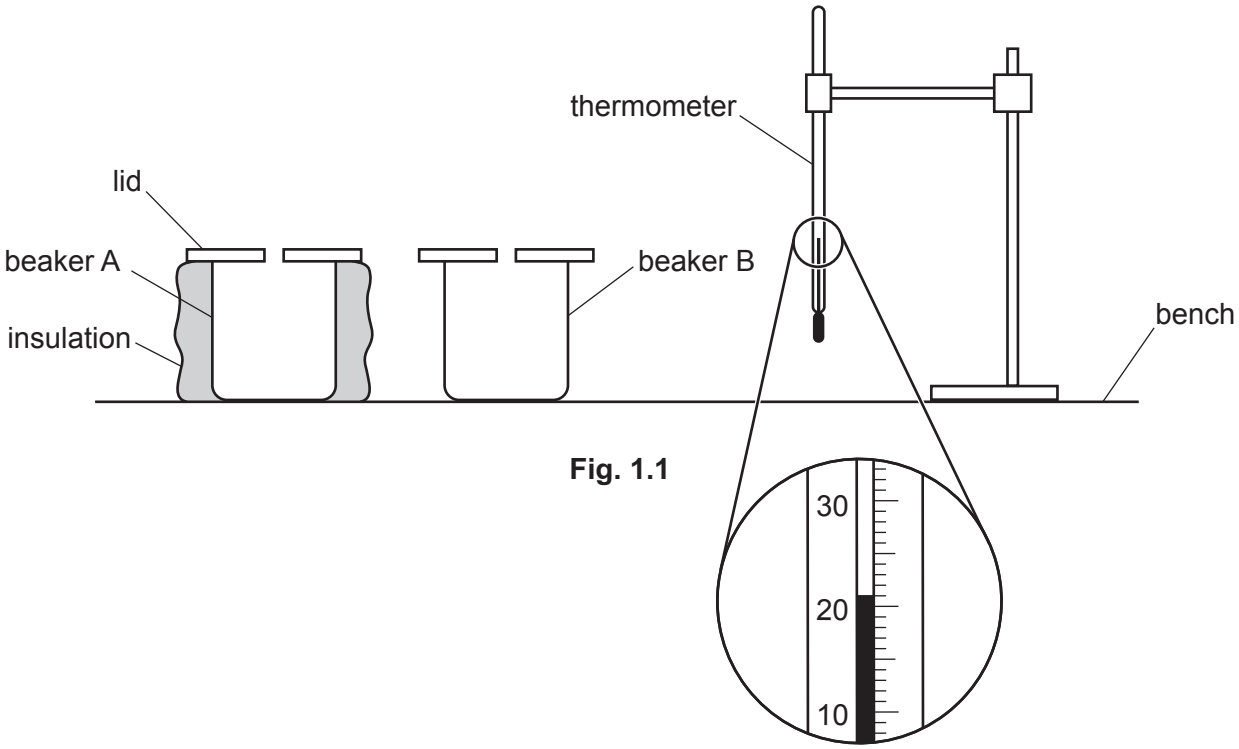

Fig. 1.1

(a) Record room temperature θ_R shown on the thermometer in Fig. 1.1.

View solution

θ_R = ... [1]

(b) The student pours 150 cm^3 of hot water into beaker A and records the temperature θ at time t = 0.

She records, in Table 1.1, the temperature of the water in the beaker every 30 s. The student repeats the process for beaker B.

Add units to the column headings in Table 1.1. [1]

View solution

Table 1.1

	beaker A with insulation	beaker B without insulation
t/	θ/	θ/
0	88.0	87.5
30	86.0	83.5
60	84.5	81.5
90	83.5	80.0
120	82.5	79.0
150	82.0	78.5
180	81.5	78.0

(c) Describe **two** precautions that can be taken to ensure that temperature readings in the experiment are as accurate as possible.

1. .....

.....

2. .....

.....

[2]

(d) Write a conclusion stating whether the insulation affects the rate of cooling of the water. Justify your answer by reference to values from the results.

.....

.....

.....

..... [2]

View solution

© UCLES 2021

(e) **(i)** Calculate the average cooling rate x_1 during the first half of the experiment for the water in beaker B. Use the readings for beaker B from Table 1.1 and the equation

$$x_1 = \frac{\theta_0 - \theta_{90}}{T},$$

where $T = 90\,\text{s}$ and θ_0 and θ_{90} are the temperatures of the water in beaker B at $t = 0$ and $t = 90\,\text{s}$.

View solution

Include the unit.

x_1 = ... [1]

(ii) Calculate the average cooling rate x_2 during the second half of the experiment for the water in beaker B. Use the readings for beaker B from Table 1.1 and the equation

$$x_2 = \frac{\theta_{90} - \theta_{180}}{T},$$

where $T = 90\,\text{s}$ and θ_{90} and θ_{180} are the temperatures of the water in beaker B at $t = 90\,\text{s}$ and $t = 180\,\text{s}$.

View solution

Include the unit.

x_2 = ... [1]

(f) **(i)** Suggest an additional experiment to test whether the lid affects the cooling rate of the water in beaker B. State how the readings are used to show the effect.

.....

.....

..... [1]

(ii) A student suggests that the temperature of the water in beaker B at $t = 0$ for this additional experiment must be the same as in **(b)** for the comparison to be fair.

View solution

State whether your results support this suggestion.

Use your results from **(e)** to explain whether this precaution is necessary.

statement .....

explanation .....

.....

.....

[2]

[Total: 11]

2 A student compares the resistances of two wires.

She uses the circuit, part of which is shown in Fig. 2.1.

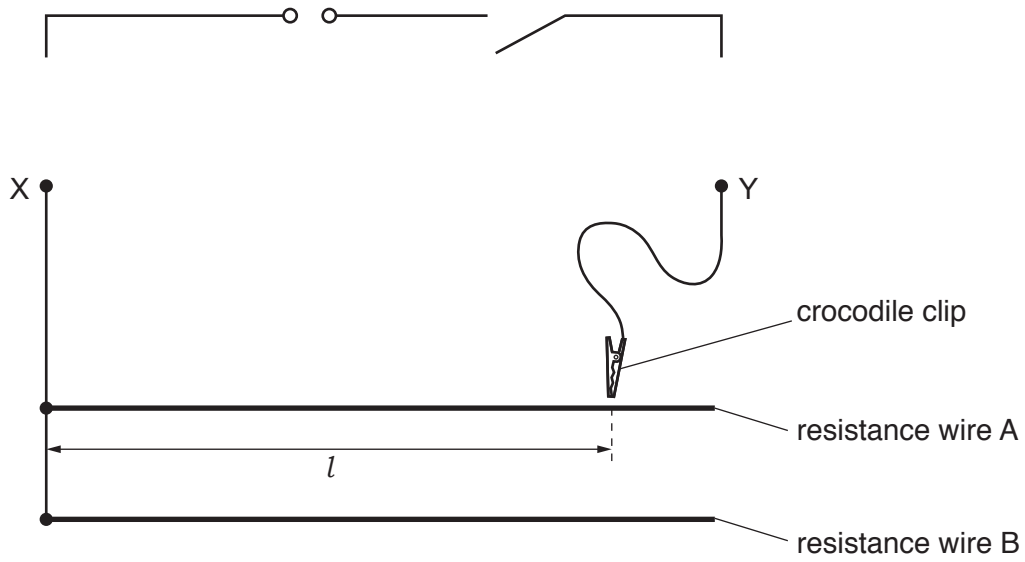

Fig. 2.1

View solution

(a) On Fig. 2.1, complete the circuit diagram to show a voltmeter connected to measure the potential difference (p.d.) across terminals X and Y, and an ammeter connected to measure the current in the circuit. [2]

(b) The student connects the crocodile clip to a length l = 90.0 cm of resistance wire A and measures the potential difference V and the current I for the length l of the wire.

View solution

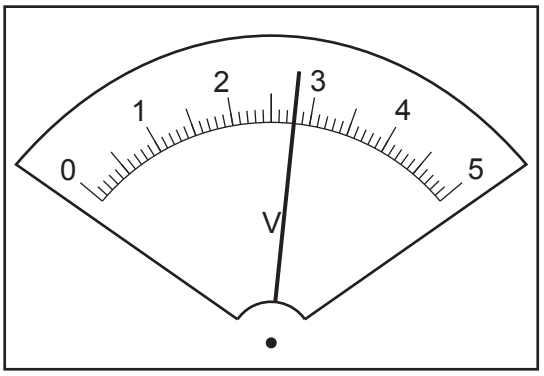

Fig. 2.2

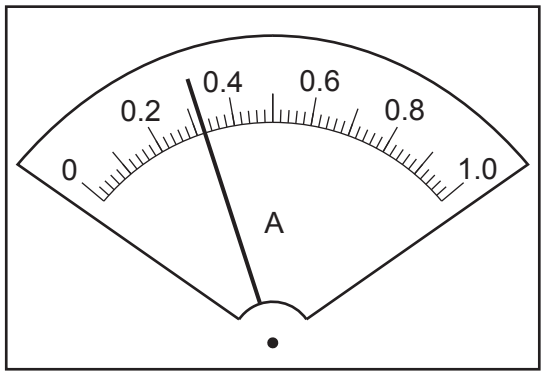

Fig. 2.3

(i) Read, and record in Table 2.1, the values of V and I shown on the meters in Fig. 2.2 and Fig. 2.3. [2]

Table 2.1

wire	l / cm	V /	I /	R /
A	90.0			
B	90.0	2.6	0.45	
A	50.0	2.7	0.54	
B	50.0	2.3	0.72	

(ii) The student then connects the crocodile clip to lengths l = 90.0 cm of wire B, l = 50.0 cm of wire A and l = 50.0 cm of wire B.

Her readings are shown in Table 2.1.

Calculate, and record in Table 2.1, the resistance R of each length of wire A and wire B.

Use the values of V and I and the equation

$$R = \frac{V}{I}.$$

[2]

(iii) Complete the headings in Table 2.1. [1]

(c) (i) Calculate a value P using your results from Table 2.1 and the equation

$$P = \frac{R \text{ for } 90.0 \text{ cm of wire A}}{R \text{ for } 90.0 \text{ cm of wire B}}.$$

View solution

P = ...

Calculate a value Q using your results from Table 2.1 and the equation

$$Q = \frac{R \text{ for } 50.0 \text{ cm of wire A}}{R \text{ for } 50.0 \text{ cm of wire B}}.$$

Q = ...

[1]

© UCLES 2021

(ii) A student suggests that the values of *P* and *Q* should be equal.

State whether your results support this suggestion. Justify your answer by reference to values from your results.

statement .....

justification .....

.....

.....

[2]

(d) Suggest **one** reason why students all doing this experiment carefully with the same apparatus may not obtain the same results.

.....

..... [1]

[Total: 11]

View solution

3 A student investigates the image produced by a converging lens.

He uses the apparatus shown in Fig. 3.1.

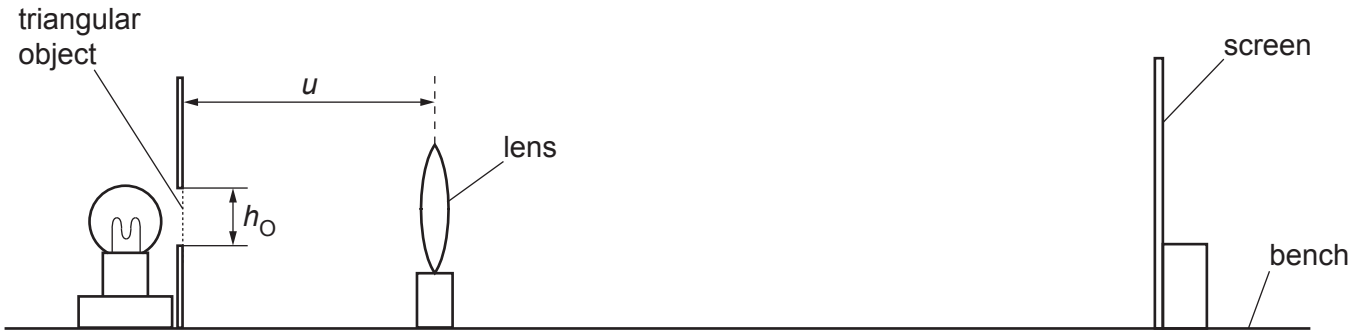

Fig. 3.1

(a) The triangular object is shown full size in Fig. 3.2.

Measure and record the height h_O of the triangular object in Fig. 3.2.

h_O = ... cm [1]

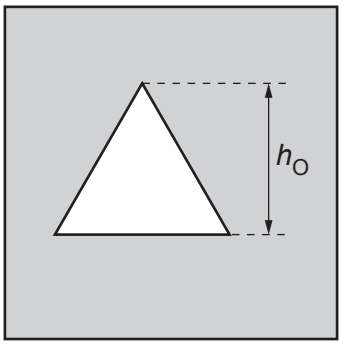

Fig. 3.2

(b) The student sets the distance u between the triangular object and the lens to 20.0 cm. He moves the screen until a sharp image of the triangular object is seen on the screen. The student measures, and records in Table 3.1, the height h_I of the image on the screen.

Briefly describe a technique to obtain an image on the screen that is as sharp as possible in this experiment.

.....

..... [1]

(c) The student repeats the process for u = 25.0 cm, u = 30.0 cm, u = 35.0 cm and u = 40.0 cm. His readings are shown in Table 3.1.

For distance u = 20.0 cm, calculate, and record in Table 3.1, the value of $\frac{1}{h_I}$. [1]

View solution

Table 3.1

u / cm	h_I / cm	$\frac{1}{h_I} \Big/ \frac{1}{\text{cm}}$
20.0	5.6	
25.0	3.2	0.31
30.0	1.9	0.53
35.0	1.5	0.67
40.0	1.2	0.83

(d) Plot a graph of u / cm (y-axis) against $\frac{1}{h_I} \Big/ \frac{1}{\text{cm}}$ (x-axis).

View solution

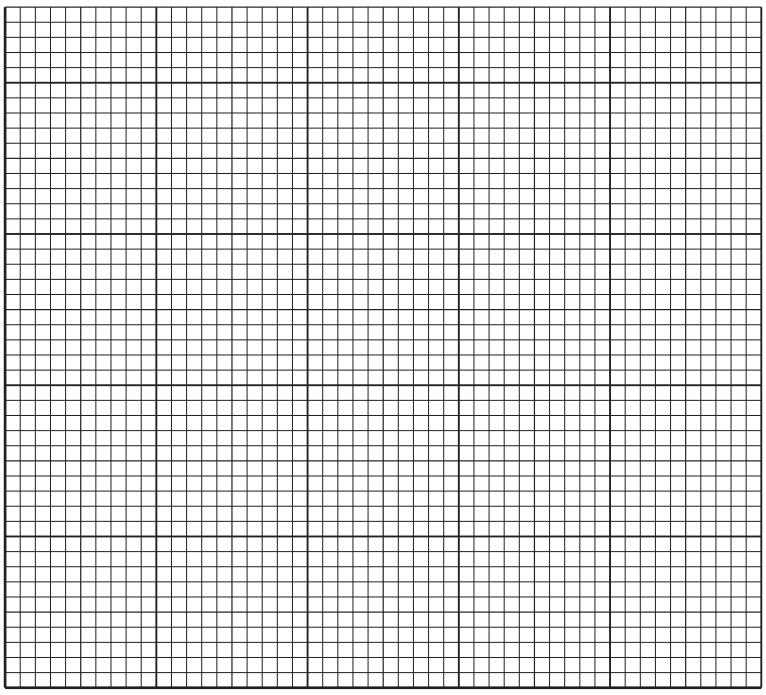

[4]

(e) (i) Determine the gradient of the graph.

View solution

Show clearly on the graph how you obtained the necessary information.

gradient = ... [1]

(ii) Calculate the focal length f of the lens. Use your value of h_O from **(a)** and the equation

$$f = \frac{G}{h_O},$$

where G is numerically equal to the gradient from **(e)(i)**.

View solution

f = ... [1]

(f) Describe **one** difficulty that can be experienced when measuring the height of the image.

View solution

Suggest an improvement to overcome this difficulty.

difficulty .....

.....

improvement .....

.....

[2]

[Total: 11]

4 A student investigates the strength of an electromagnet.

The electromagnet is made from a coil of insulated wire wrapped around an iron rod. When there is an electric current in the coil, the iron rod becomes magnetised. The electromagnet can then attract magnetic materials (e.g. iron and steel).

Plan an experiment to investigate how **one** factor affects the number of steel paper clips the electromagnet can support.

View solution

The apparatus available includes:
- an electromagnet, shown in Fig. 4.1
- a power supply
- a selection of steel paper clips.

In your plan, you should:

- state a factor which can be measured and list any additional apparatus needed
- state the key variables to be kept constant
- explain briefly how to do the experiment, including any precautions to ensure reliable results (you may draw a diagram or add to Fig. 4.1 to help your explanation)
- draw a table, or tables, with column headings, to show how to display the readings (you are **not** required to enter any readings in the table)
- explain how to use the readings to reach a conclusion.

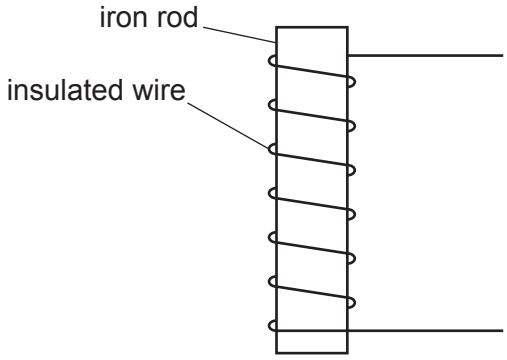

Fig. 4.1

.....

.....

.....

.....

.....

.....

.....

.....

.....

.....

.....

.....

.....

.....

.....

.....

.....

.....

.....

.....

.....

..... [7]

BLANK PAGE

© UCLES 2021

BLANK PAGE

BLANK PAGE

Permission to reproduce items where third-party owned material protected by copyright is included has been sought and cleared where possible. Every reasonable effort has been made by the publisher (UCLES) to trace copyright holders, but if any items requiring clearance have unwittingly been included, the publisher will be pleased to make amends at the earliest possible opportunity.

To avoid the issue of disclosure of answer-related information to candidates, all copyright acknowledgements are reproduced online in the Cambridge Assessment International Education Copyright Acknowledgements Booklet. This is produced for each series of examinations and is freely available to download at www.cambridgeinternational.org after the live examination series.

Cambridge Assessment International Education is part of the Cambridge Assessment Group. Cambridge Assessment is the brand name of the University of Cambridge Local Examinations Syndicate (UCLES), which itself is a department of the University of Cambridge.

© UCLES 2021