Cambridge Assessment International Education

Cambridge IGCSE™

PHYSICS **0625/11**

Paper 1 Multiple Choice (Core) **October/November 2022**

45 minutes

You must answer on the multiple choice answer sheet.

You will need: Multiple choice answer sheet
Soft clean eraser
Soft pencil (type B or HB is recommended)

INSTRUCTIONS

- There are **forty** questions on this paper. Answer **all** questions.
- For each question there are four possible answers **A**, **B**, **C** and **D**. Choose the **one** you consider correct and record your choice in soft pencil on the multiple choice answer sheet.
- Follow the instructions on the multiple choice answer sheet.
- Write in soft pencil.
- Write your name, centre number and candidate number on the multiple choice answer sheet in the spaces provided unless this has been done for you.
- Do **not** use correction fluid.
- Do **not** write on any bar codes.
- You may use a calculator.
- Take the weight of 1.0 kg to be 10 N (acceleration of free fall = 10 m / s^2).

INFORMATION

- The total mark for this paper is 40.
- Each correct answer will score one mark.
- Any rough working should be done on this question paper.

This document has **16** pages.

© UCLES 2022

1 The times for 10 swings of a pendulum are measured.

View solution

measurement	time for 10 swings / s
1	10.12
2	10.48
3	10.24

What is the average time for **one** swing?

A 1.028 s **B** 1.036 s **C** 1.042 s **D** 10.28 s

View solution

2 A car starts from rest.

The table shows the readings from its speedometer every 10 s.

time / s	0	10	20	30	40	50	60
$\frac{\text{speed}}{\text{m/s}}$	0	4	8	12	12	12	12

Which row describes the car's motion in the first 30 seconds and in the last 30 seconds?

	motion during first 30 s	motion during last 30 s
A	non-zero acceleration	at rest
B	zero acceleration	constant speed
C	zero acceleration	at rest
D	non-zero acceleration	constant speed

© UCLES 2022

3 A stone is placed on a balance as shown.

View solution

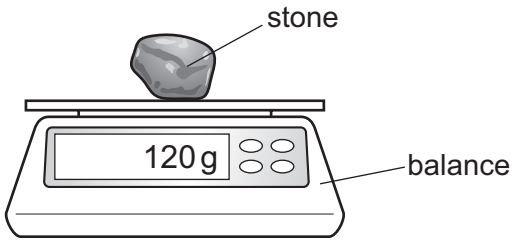

Which row gives the mass and weight of the stone?

	mass	weight
A	120 g	1.2 N
B	120 g	1200 N
C	1.2 N	120 g
D	1200 N	120 g

4 The diagram shows the dimensions of a solid rectangular block of metal of mass m.

View solution

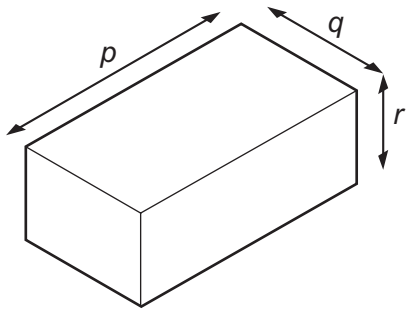

Which expression is used to calculate the density of the metal?

A $\frac{m}{(p \times q)}$

B $\frac{m}{(p \times q \times r)}$

C $m \times p \times q$

D $m \times p \times q \times r$

5 A force *F* acts on an object at a distance *x* from a pivot.

View solution

Which two changes both increase the moment of the force about the pivot?

	change 1	change 2
A	decrease *F*	decrease *x*
B	decrease *F*	increase *x*
C	increase *F*	decrease *x*
D	increase *F*	increase *x*

6 The diagrams represent the only two forces acting on an object.

View solution

Which object could be moving to the right at constant speed?

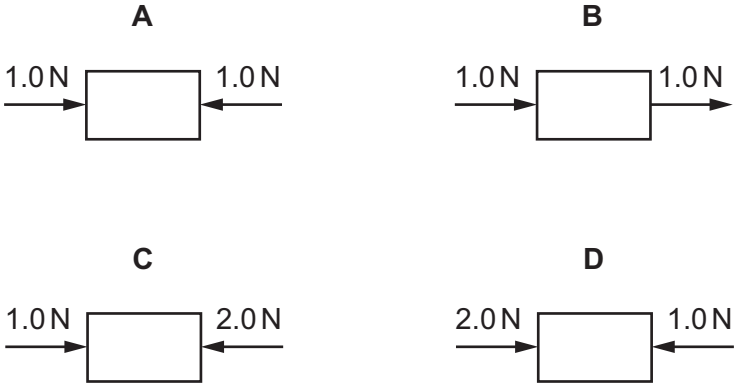

7 The diagram shows a uniform rod with its midpoint on a pivot. Two weights X and Y are hung from the rod. The rod is in equilibrium.

View solution

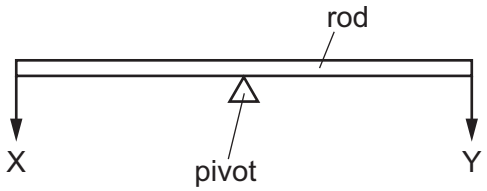

Which statement is correct?

A The forces at X and Y have different values.

B There is a resultant turning effect on the rod.

C The resultant force on the rod is zero.

D The rod does not have a centre of mass.

8 Brakes are used to slow down a moving car.

View solution

Into which form of energy is most of the kinetic energy converted as the car slows down?

A chemical

B elastic

C thermal

D sound

9 What is a disadvantage of nuclear fission as a source of energy?

View solution

A Nuclear power stations are expensive to build.

B Nuclear power stations are unreliable.

C Nuclear power stations can only provide small quantities of energy.

D Nuclear power stations release large quantities of carbon dioxide into the atmosphere.

10 The statements describe what happens when the power of a machine is increased.

View solution

1 The work done in a given time decreases.

2 The work done in a given time increases.

3 The time taken to do a given quantity of work decreases.

4 The time taken to do a given quantity of work increases.

Which statements are correct?

A 1 and 3 **B** 1 and 4 **C** 2 and 3 **D** 2 and 4

11 Which quantities, in addition to the acceleration of free fall g, affect the pressure at the bottom of a pond of water?

View solution

A the density of the water and the depth of the pond only

B the density of the water and the surface area of the pond only

C the depth of the pond and the surface area of the pond only

D the depth of the pond, the density of the water and the surface area of the pond

© UCLES 2022

12 A fixed mass of gas is trapped in a container. The temperature of the gas is increased but the volume of the gas is kept constant.

View solution

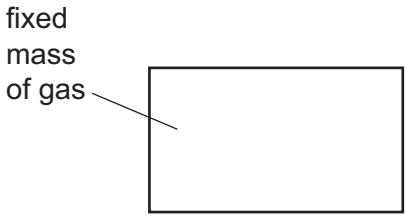

How does this change affect the average kinetic energy of the molecules and the pressure on the walls of the container?

	average kinetic energy	pressure
A	increases	increases
B	stays the same	increases
C	increases	decreases
D	decreases	increases

13 Which row correctly describes the arrangement and the motion of particles in a solid?

View solution

	arrangement of particles	motion of particles
A	far apart	moving randomly from place to place
B	far apart	vibrating about one position
C	tightly packed	moving randomly from place to place
D	tightly packed	vibrating about one position

14 What is the temperature difference between the fixed points on the °C temperature scale?

View solution

A 10 °C **B** 100 °C **C** 110 °C **D** 120 °C

© UCLES 2022

15 In the diagram, each box represents a state of matter and each arrow represents a change of state.

View solution

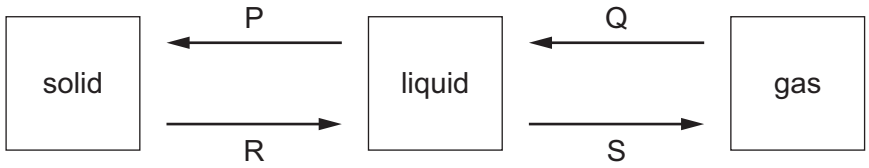

Which row correctly identifies the changes of state?

	P	Q	R	S
A	freezing	condensation	boiling	melting
B	boiling	melting	condensation	freezing
C	freezing	condensation	melting	boiling
D	condensation	freezing	melting	boiling

16 Four thermometers, with their bulbs painted different colours, are placed at equal distances from a radiant heater.

View solution

Which thermometer shows the slowest temperature rise when the heater is first switched on?

A dull black

B dull white

C shiny black

D shiny white

17 Which method of transfer of thermal energy is caused by changes in density?

View solution

A conduction

B convection

C evaporation

D radiation

© UCLES 2022

18 The diagrams show two sets of wavefronts in a ripple tank.

View solution

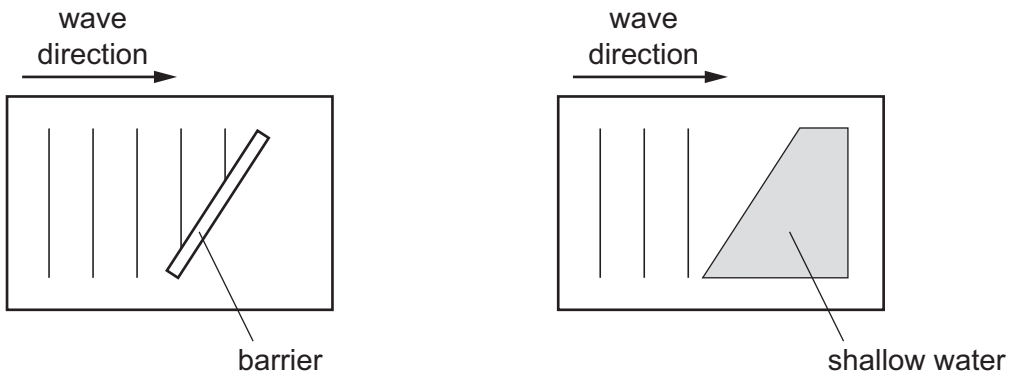

A student makes two statements about the waves.

1 When the waves reflect from the barrier the direction changes but the wavelength remains the same.

2 When the waves refract as they enter the shallow water the direction remains the same, but the wavelength changes.

Which statements are correct?

A statement 1 and statement 2

B statement 1 only

C statement 2 only

D neither statement 1 nor statement 2

19 What is the correct order of the colours in a spectrum of white light?

View solution

A blue → green → yellow

B blue → yellow → green

C yellow → blue → green

D green → blue → yellow

20 An object is placed 30 cm in front of a plane mirror.

View solution

Which statement describes the image of the object?

A The image is the same size and 30 cm from the object.

B The image is the same size and 60 cm from the object.

C The image is smaller and 30 cm from the object.

D The image is smaller and 60 cm from the object.

© UCLES 2022

21 A ray of light is shone onto the surface of a mirror.

View solution

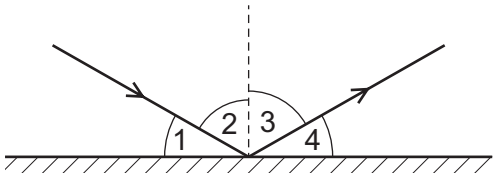

Which two angles represent the angle of incidence and the angle of reflection?

A 1 and 2 **B** 1 and 4 **C** 2 and 3 **D** 3 and 4

22 The diagram shows the electromagnetic spectrum. The numbers indicate the approximate wavelength at the boundaries between the various regions of the spectrum.

For a device to be able to make use of electromagnetic radiation, it needs an aerial of approximately the same size as the wavelength of the radiation it is designed to work with.

View solution

P	Q	R	S	T	U	V
1 m	10^{-3} m	7×10^{-7} m	4×10^{-7} m	10^{-8} m	10^{-11} m	

Which statement is correct?

A A mobile phone uses radiation from region P.

B A television satellite dish uses radiation from region Q.

C The receptor cells in an eye use radiation from region R.

D The remote controller for a television uses radiation from region U.

23 Microwaves and X-rays are regions of the electromagnetic spectrum.

View solution

Which statement about microwaves and X-rays is correct?

A Microwaves and X-rays have the same frequency.

B Microwaves and X-rays travel at the same speed in a vacuum.

C Microwaves have a shorter wavelength than X-rays.

D Microwaves travel at a lower speed than X-rays in a vacuum.

© UCLES 2022

24 An observer stands at the finish line of a 100 m race. He wants to time the winner's run. He starts his stop-watch as soon as he sees the smoke from the starting gun instead of when he hears the bang.

View solution

What is the reason for doing this?

A Light travels much faster than sound.

B There is a risk he might respond to an echo from a wall.

C Humans react slower to sound than to light.

D Humans react more quickly to sound than to light.

25 Which description of a current in a metal is correct?

View solution

A a flow of electrons

B a flow of molecules

C a flow of positive atoms

D a flow of protons

26 The diagram shows a circuit containing a variable resistor connected to a variable power supply.

View solution

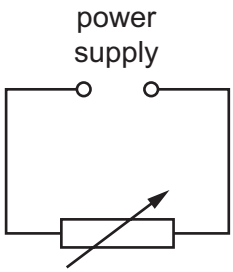

The table shows the currents for different values of the potential difference (p.d.) and the resistance.

p.d. / V	resistance / Ω	current
3.6	12	I_1
1.2	12	I_2
3.6	6	I_3

What is the order of the currents from smallest to largest?

A $I_1 \rightarrow I_2 \rightarrow I_3$ **B** $I_1 \rightarrow I_3 \rightarrow I_2$ **C** $I_2 \rightarrow I_1 \rightarrow I_3$ **D** $I_3 \rightarrow I_1 \rightarrow I_2$

© UCLES 2022

27 The e.m.f. of the cell in this circuit is 1.5 V.

View solution

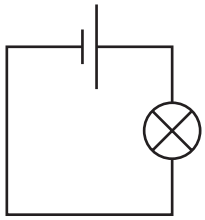

What does e.m.f. stand for?

A electromagnetic field

B electromagnetic force

C electromotive field

D electromotive force

28 A negatively charged plastic rod P is placed above a positively charged plastic rod Q.

View solution

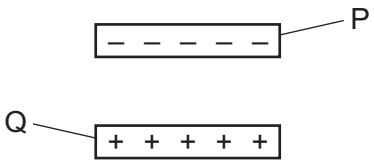

What are the directions of the electrostatic forces on rod P and on rod Q?

	electrostatic force on rod P	electrostatic force on rod Q
A	downwards	downwards
B	downwards	upwards
C	upwards	downwards
D	upwards	upwards

29 A student finds the resistance of a resistor.

View solution

Which circuit is used to measure the potential difference (p.d.) across the resistor and the current in it?

A

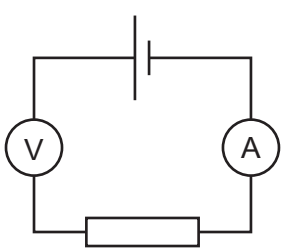

B

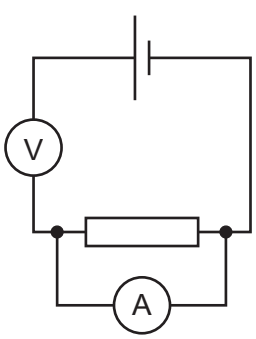

C

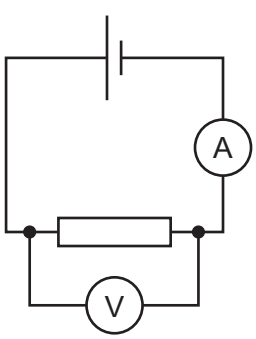

D

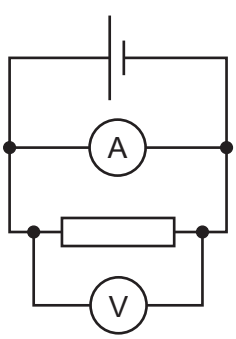

30 The circuit diagram shows a variable potential divider.

View solution

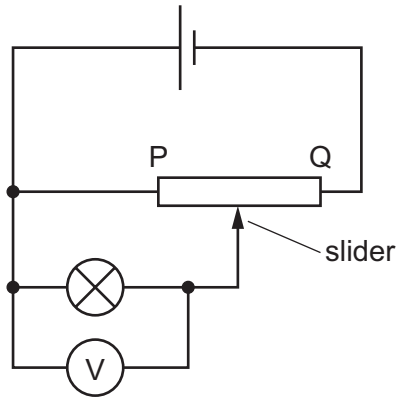

The slider is moved from P towards Q.

What happens to the reading on the voltmeter and to the brightness of the lamp?

	reading on voltmeter	brightness of lamp
A	decreases	decreases
B	decreases	increases
C	increases	decreases
D	increases	increases

31 The diagram shows a circuit containing a cell, a variable resistor and two bulbs, P and Q.

View solution

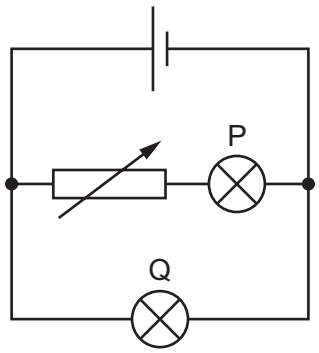

The resistance of the variable resistor is increased.

What happens to the brightness of each bulb?

	brightness of bulb P	brightness of bulb Q
A	dimmer	dimmer
B	dimmer	remains the same
C	remains the same	dimmer
D	remains the same	remains the same

© UCLES 2022

32 Which diagram shows a circuit containing a battery, a fuse and a buzzer?

View solution

A

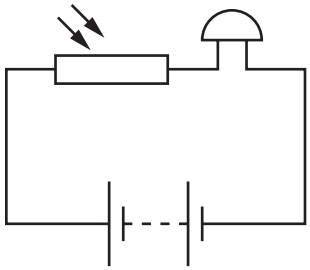

B

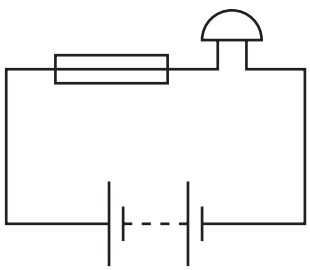

C

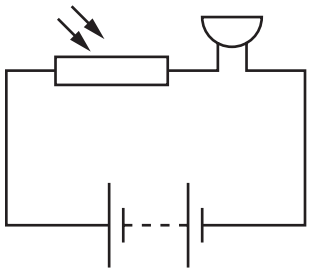

D

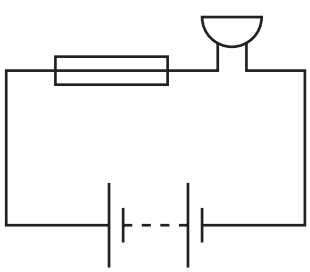

33 Why is a fuse used in an electric circuit?

View solution

A to increase the circuit resistance

B to prevent short circuits

C to reduce the power loss

D to stop the cables from overheating

© UCLES 2022

34 The diagram represents a transformer.

View solution

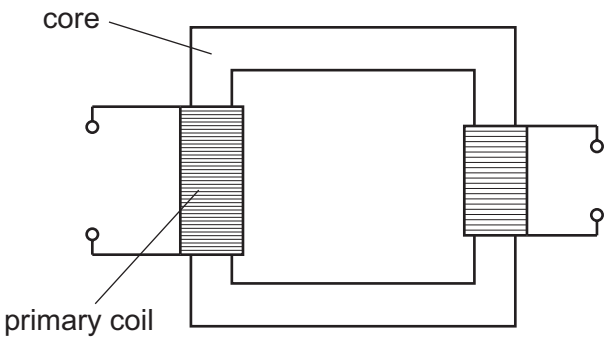

Which row shows materials suitable for making the core and the primary coil?

	core	primary coil
A	iron	copper
B	iron	plastic
C	steel	copper
D	steel	plastic

35 The diagrams show the magnetic field lines around a wire carrying a current, I.

View solution

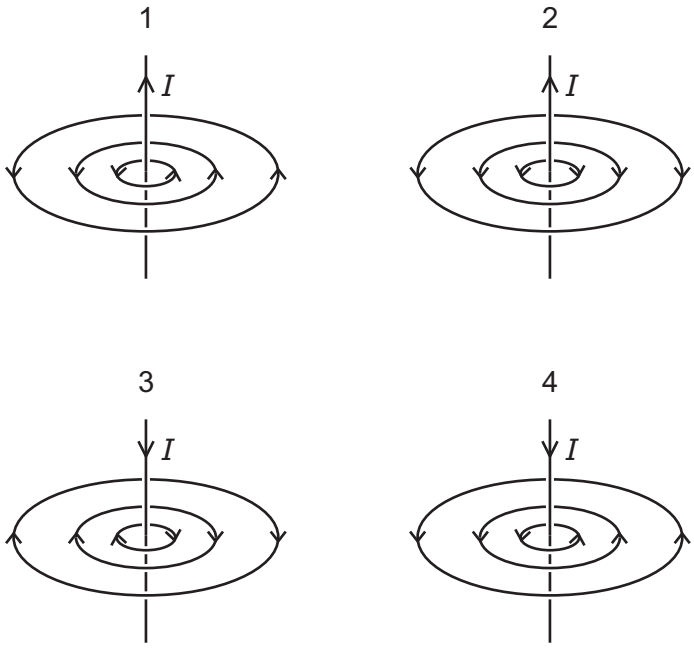

Which diagrams are correct?

A 1 only **B** 2 and 3 **C** 4 only **D** 1 and 3

36 A wire is placed between the poles of a magnet.

View solution

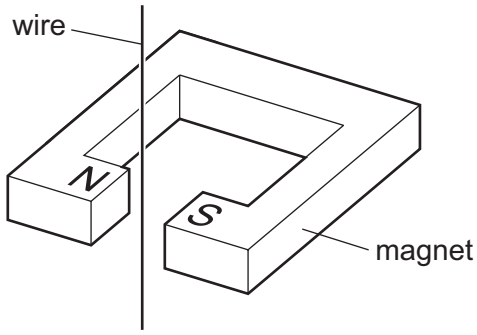

Which statements are correct?

1 An a.c. current in the wire causes a changing force on it.

2 A downward d.c. current in the wire causes a constant force on it.

3 An upward d.c. current in the wire causes a constant force on it.

A 1 and 2 only **B** 1 and 3 only **C** 2 and 3 only **D** 1, 2 and 3

37 The nuclide notation for the isotope lithium-7 is $^{7}_{3}\mathrm{Li}$.

View solution

How many neutrons are there in an atom of lithium-7?

A 3 **B** 4 **C** 7 **D** 10

38 A radioactive material is emitting α-particles. The radioactive material is used in a demonstration in a school laboratory experiment.

View solution

Which safety precaution must be taken by the person carrying out the experiment?

A Handle the source with tongs.

B Place the source on a heat-proof mat.

C Surround the experiment with a lead screen.

D Wear goggles.

© UCLES 2022

39 The graph shows how the count rate from a radioactive isotope changes with time.

View solution

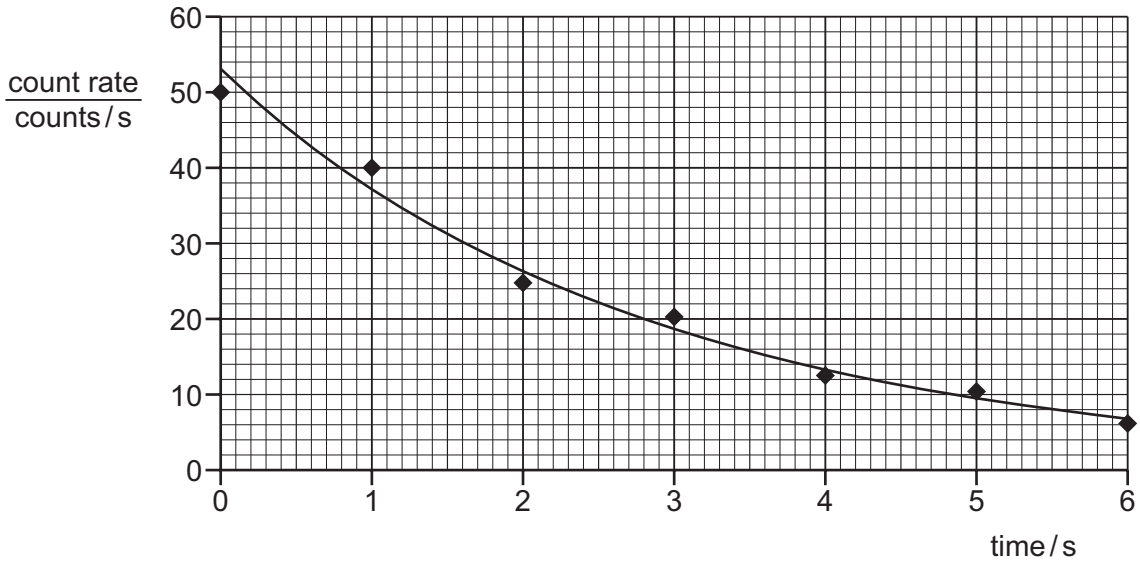

What is the half-life of this isotope?

A 2.0 s **B** 6.0 s **C** 12 s **D** 53 s

40 A student measures the count rate near a radioactive source using a detector of ionising radiation. The diagram shows the arrangement.

View solution

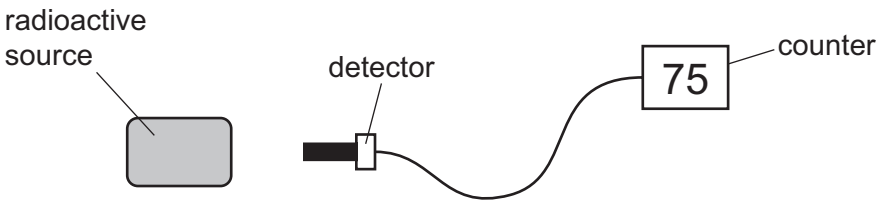

The counter reads 75 counts per minute.

When the source is taken away, the reading on the counter decreases to 5 counts per minute.

What was the rate of emission from the radioactive source when the counter reading is corrected for background radiation?

A 5 counts per minute

B 15 counts per minute

C 70 counts per minute

D 80 counts per minute

Permission to reproduce items where third-party owned material protected by copyright is included has been sought and cleared where possible. Every reasonable effort has been made by the publisher (UCLES) to trace copyright holders, but if any items requiring clearance have unwittingly been included, the publisher will be pleased to make amends at the earliest possible opportunity.

To avoid the issue of disclosure of answer-related information to candidates, all copyright acknowledgements are reproduced online in the Cambridge Assessment International Education Copyright Acknowledgements Booklet. This is produced for each series of examinations and is freely available to download at www.cambridgeinternational.org after the live examination series.

Cambridge Assessment International Education is part of Cambridge Assessment. Cambridge Assessment is the brand name of the University of Cambridge Local Examinations Syndicate (UCLES), which is a department of the University of Cambridge.

© UCLES 2022