Cambridge Assessment International Education

Cambridge IGCSE™

CANDIDATE NAME									
CENTRE NUMBER						CANDIDATE NUMBER				

PHYSICS **0625/41**

Paper 4 Theory (Extended) **October/November 2022**

1 hour 15 minutes

You must answer on the question paper.

No additional materials are needed.

INSTRUCTIONS

- Answer **all** questions.
- Use a black or dark blue pen. You may use an HB pencil for any diagrams or graphs.
- Write your name, centre number and candidate number in the boxes at the top of the page.
- Write your answer to each question in the space provided.
- Do **not** use an erasable pen or correction fluid.
- Do **not** write on any bar codes.
- You may use a calculator.
- You should show all your working and use appropriate units.
- Take the weight of 1.0 kg to be 10 N (acceleration of free fall = 10 m / s^2).

INFORMATION

- The total mark for this paper is 80.
- The number of marks for each question or part question is shown in brackets [ ].

This document has **20** pages. Any blank pages are indicated.

© UCLES 2022

1 Two blocks, A and B, are joined by a thin thread that passes over a frictionless pulley. Block A is at rest on a rough horizontal surface and block B is held at rest, just below the pulley.

Fig. 1.1 shows the thread hanging loose.

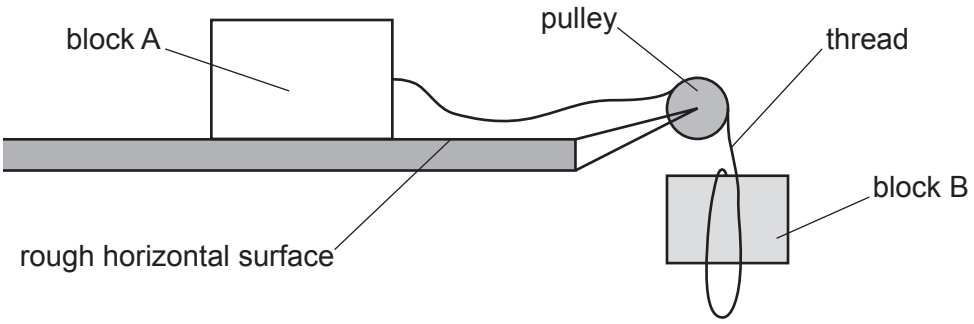

Fig. 1.1 (not to scale)

Block B is released and it falls vertically. The thread remains loose until block B has fallen a distance of 0.45 m.

The mass of block B is 0.50 kg.

(a) Calculate the change in the gravitational potential energy (g.p.e.) of block B as it falls through 0.45 m.

View solution

change in g.p.e. ..... [2]

(b) The mass of block A is 2.0 kg.

When the thread tightens, it pulls on block A which moves to the right at a speed of 0.60 m / s.

(i) Calculate the impulse exerted on block A as it accelerates from rest to 0.60 m / s.

View solution

impulse = ... [3]

(ii) Both of the blocks now move at a constant speed of 0.60 m / s until block B hits the ground and the thread becomes loose.

Explain the energy change that takes place in block A after block B stops moving.

View solution

.....

.....

.....

..... [3]

[Total: 8]

2 A force is a vector quantity.

(a) (i) State **two** features of a vector quantity.

View solution

1. .....

2. .....

[2]

(ii) State the names of **two** other quantities that are vectors.

View solution

1. .....

2. .....

[2]

(b) A student suspends a spring from a clamp stand and measures the length l_0 of the spring.

Fig. 2.1 shows the apparatus.

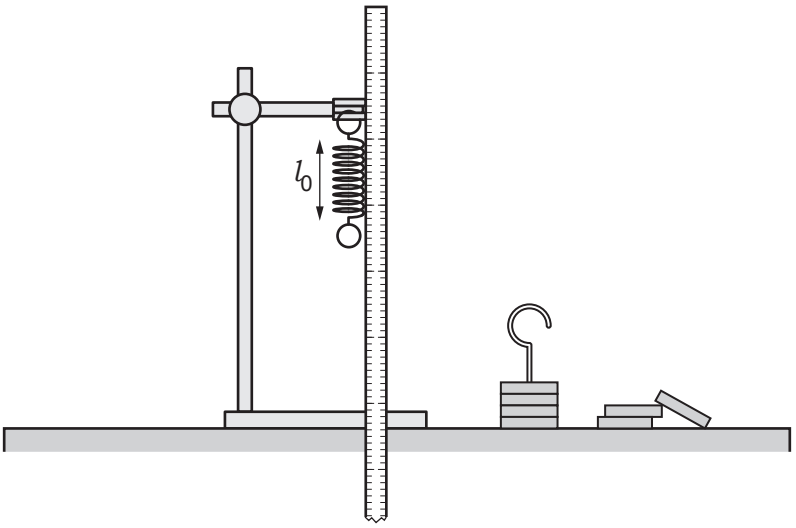

Fig. 2.1 (not to scale)

The student then suspends loads of different weights from the spring and measures the length of the spring for each load. He then plots a graph of the length of the spring against weight.

Fig. 2.2 is the graph that the student plots.

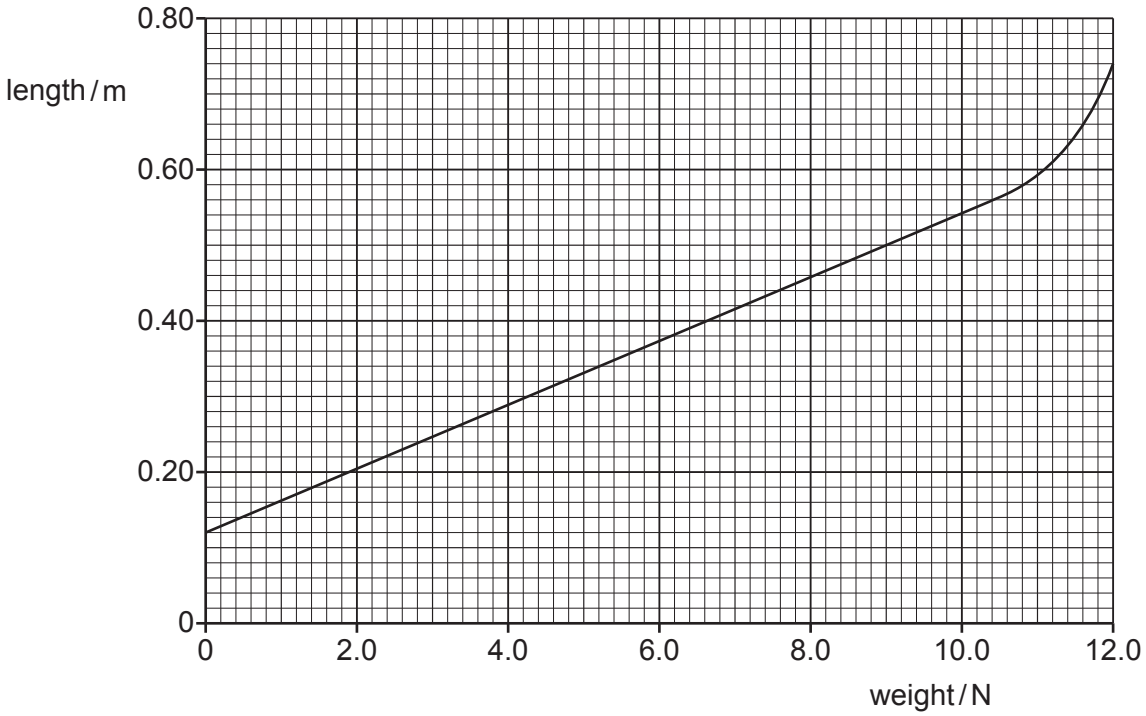

Fig. 2.2

(i) Using Fig. 2.2, determine the initial length l_0 of the spring.

l_0 = ... [1]

(ii) State what is meant by the limit of proportionality and, using Fig. 2.2, determine the weight of the load that causes this spring just to reach the limit of proportionality.

limit of proportionality .....

.....

.....

weight = ...

[2]

(iii) Using Fig. 2.2, determine the spring constant of this spring.

View solution

spring constant = ... [3]

[Total: 10]

3 A rock climber, of total mass 62 kg, holds herself in horizontal equilibrium against a vertical cliff. She pulls on a rope that is fixed at the top of the cliff and presses her feet against the cliff.

Fig. 3.1 shows her position.

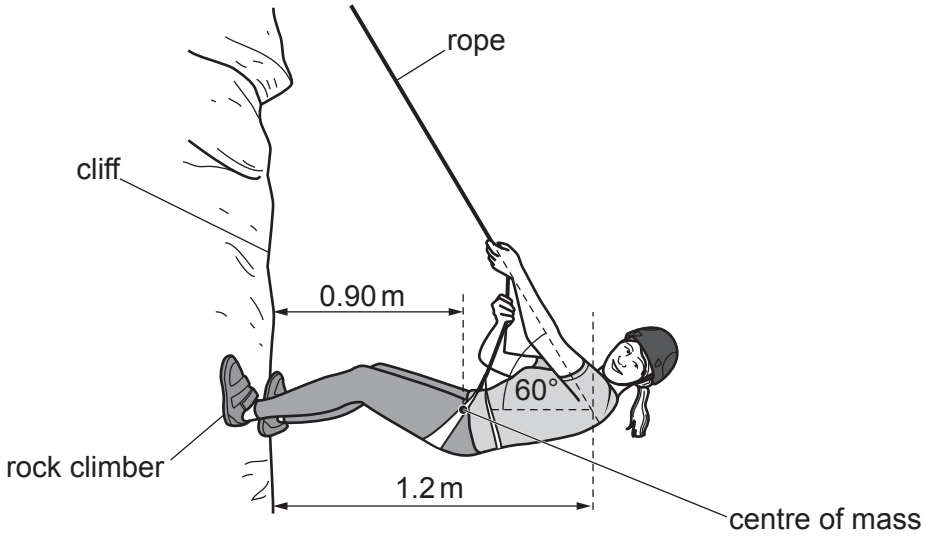

Fig. 3.1 (not to scale)

(a) Calculate the total weight of the climber.

View solution

weight = ... [1]

(b) State the **two** conditions needed for equilibrium.

View solution

1. .....

2. .....

[2]

(c) The climber's centre of mass is 0.90 m from the cliff.

View solution

(i) Calculate the moment about her feet due to her weight.

moment = ... [2]

(ii) The line of the rope meets the horizontal line through her centre of mass at a distance of 1.2 m from the cliff, as shown in Fig. 3.1. The rope is at an angle of 60° to the horizontal.

Determine the tension in the rope.

View solution

tension = ... [3]

[Total: 8]

4 A quantity of gas is trapped by a piston in a cylinder with thin metal walls. The piston is free to move without friction within the cylinder.

Fig. 4.1 shows the cylinder and piston.

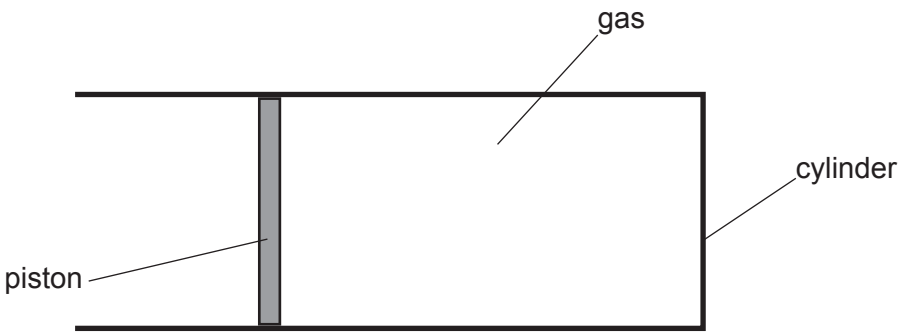

Fig. 4.1

The cylinder is placed inside a freezer.

(a) The air in the freezer is at atmospheric pressure, which is 1.0×10^5 Pa. The area of the piston in contact with the air in the freezer is 2.4×10^{-3} m^2.

(i) Calculate the force exerted on the piston by the air in the freezer.

View solution

force = ... [2]

(ii) When the cylinder is first placed into the freezer, the temperature of the gas in the cylinder decreases and the air pushes the piston into the cylinder.

Calculate the work done on the piston by the air in the freezer as the air pushes the piston a distance of 0.021 m into the cylinder.

View solution

work done = ... [2]

(b) The initial temperature of the cylinder and the gas is 21 °C and, in the freezer, the temperature of the cylinder decreases to –18 °C.

The thermal capacity of the cylinder is 89 J / °C.

View solution

Calculate the change in the internal energy of the cylinder.

change in internal energy = ... [2]

© UCLES 2022

(c) When the temperature reaches –18 °C, the pressure of the gas in the cylinder is still equal to that of the atmosphere.

Explain, in terms of the particles of the gas, how the pressure remains equal to its original value.

.....

.....

.....

.....

.....

..... [3]

(d) As the temperature of the metal cylinder decreases, the volume of the metal decreases. The decrease in the volume of the metal is much less than the decrease in the volume of the gas.

Explain, in terms of the particles of the metal, why the decrease in the volume of the metal is less than that of the gas.

.....

.....

..... [2]

[Total: 11]

View solution

5 Fig. 5.1 shows a heater in a bathroom.

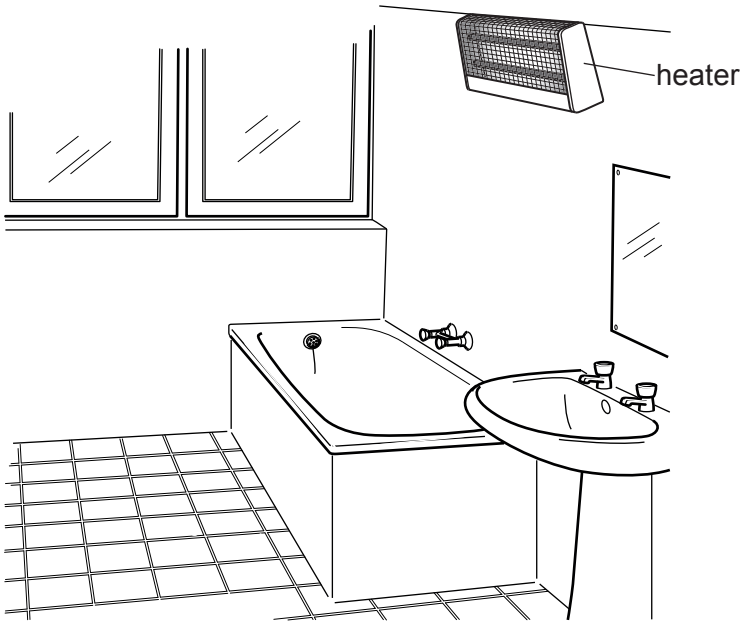

Fig. 5.1

The heater is at a very high temperature and it glows red. The manufacturer states:

> "The heater emits light and radiation and it transfers thermal energy by radiation."

(a) State the part of the electromagnetic spectrum that transfers thermal energy.

View solution

..... [1]

(b) State:

View solution

(i) **one** way in which visible light and the radiation identified in **(a)** are similar

.....

..... [1]

(ii) **one** way in which visible light differs from the radiation identified in **(a)**.

View solution

.....

..... [1]

(c) Some surfaces are better at emitting radiation than others.

(i) Describe an experiment to show whether a black surface or a white surface is the better emitter of radiation. You may draw a diagram.

View solution

.....

.....

.....

.....

..... [3]

(ii) To ensure that the conclusion reached in the experiment in **(c)(i)** is correct, several details of the experiment must be identical when testing the two different surfaces.

State **two** quantities in the experiment that you described that must be identical during the test.

1. .....

.....

2. .....

.....

[2]

[Total: 8]

View solution

6 The red light produced by a laser is monochromatic.

(a) State what is meant by monochromatic.

View solution

.....

..... [1]

(b) The red light from the laser hits the curved surface of a semicircular transparent plastic block at point P and passes into the plastic.

The red light travels through the plastic and hits the straight edge of the block at its midpoint M. Fig. 6.1 shows that some of the light is reflected and that some light travels in the air along the straight edge of the plastic block.

View solution

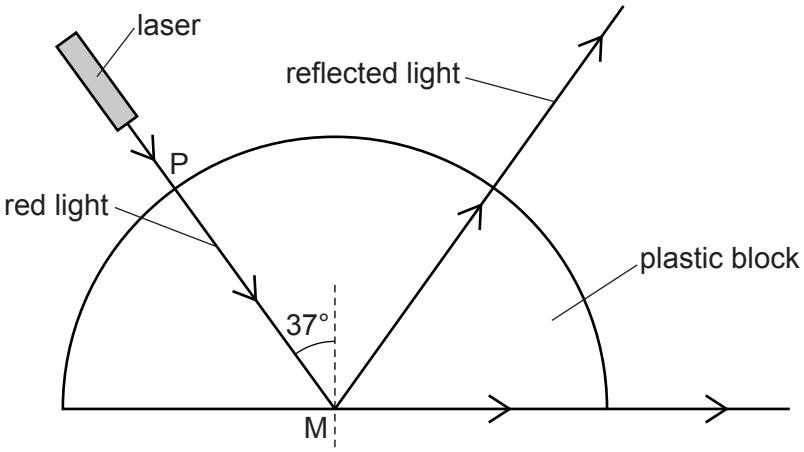

Fig. 6.1

The speed of light in air is 3.0×10^8 m/s.

(i) Explain why the red light does **not** change direction as it enters the plastic block.

.....

.....

..... [2]

(ii) At M, the angle between the red light in the plastic and the normal is 37°.

View solution

Calculate the speed of the red light in the plastic.

speed = ... [4]

(iii) In the plastic, blue light travels slightly slower than red light and so the critical angle for blue light is smaller than the critical angle for red light.

The laser that emits red light is replaced by one that emits blue light. Now blue light enters the block at P and hits the straight edge at M.



Explain what happens to the blue light after it hits the straight edge at M.

.....

.....

.....

..... [3]

[Total: 10]

7 The electric starter motor in a car is switched on and off using a relay.

The relay consists of a plastic case and two flexible springy strips, X and Y, which are made of soft iron. These iron strips act as the switch when a circuit is connected between the terminals W and Z.

Fig. 7.1 shows X, Y and the plastic case.

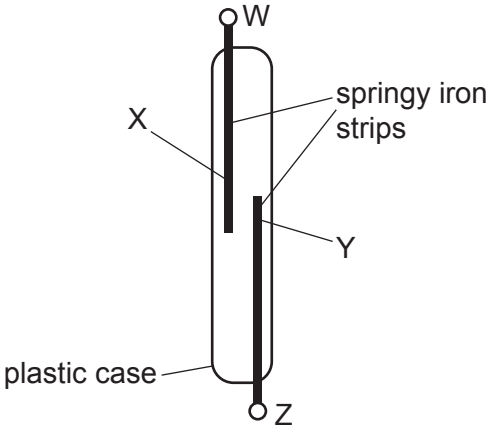

Fig. 7.1

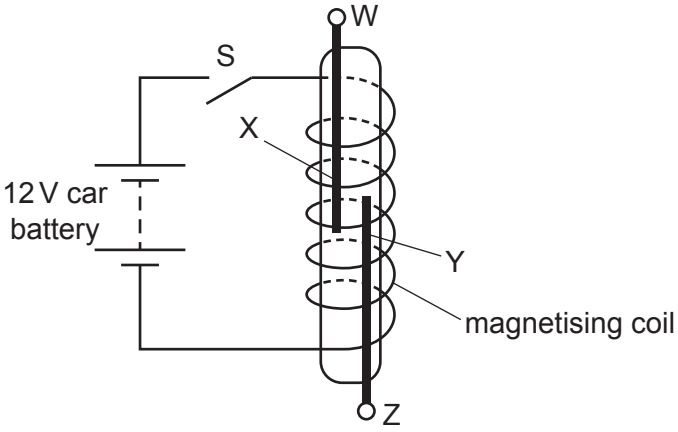

Fig. 7.2

Fig. 7.2 shows the equipment from Fig. 7.1 inside a magnetising coil. The magnetising coil is in series with the 12 V car battery and switch S, which is open.

(a) Switch S is now closed.

View solution

Explain what happens to the springy iron strips X and Y.

.....

.....

.....

..... [3]

(b) The power of the starter motor is 1.8 kW and it is also operated by the car battery.

View solution

(i) Calculate the current in the starter motor when it is used.

current = ... [2]

(ii) The starter motor circuit is connected between terminals W and Z.

View solution

Explain why copper wires with a large cross-sectional area are used for this circuit.

.....

.....

..... [2]

(c) Fig. 7.3 shows the relay and the symbols for the car battery and the starter motor.

View solution

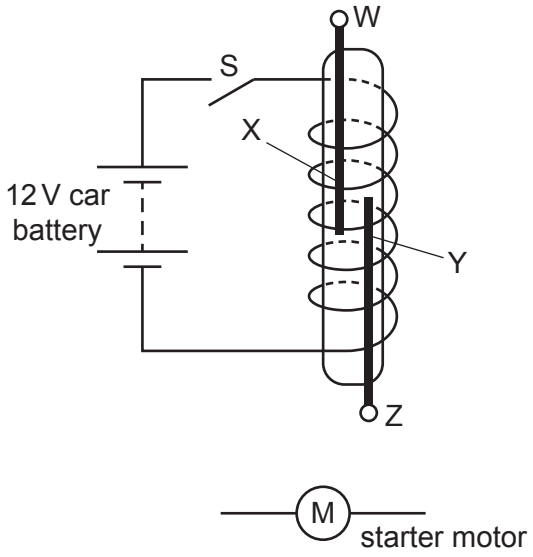

Fig. 7.3

The springy iron strips X and Y act as the switch for the starter motor circuit.

Complete the circuit diagram for the motor circuit. [2]

[Total: 9]

BLANK PAGE

8 The unit of the two electrical quantities electromotive force (e.m.f.) and potential difference (p.d.) is the volt (V).

(a) State **one** other similarity between e.m.f. and p.d.

View solution

.....

..... [1]

(b) State **one** difference between e.m.f. and p.d.

View solution

.....

..... [1]

(c) A battery consists of four cells, each of e.m.f. 1.2 V, in series.

View solution

(i) Calculate the e.m.f. of the battery.

e.m.f. = ... [1]

(ii) The battery is connected in a circuit with four 12 Ω resistors. Fig. 8.1 is the circuit diagram.

View solution

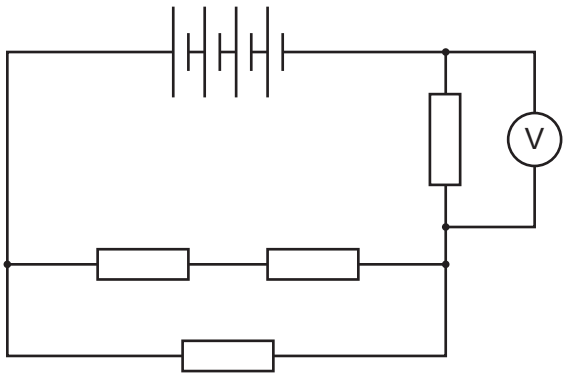

Fig. 8.1

Calculate the total resistance of this arrangement of resistors.

resistance = ... [3]

(iii) Calculate the reading on the voltmeter in Fig. 8.1.

View solution

reading = ... [2]

[Total: 8]

© UCLES 2022

9 Only one isotope of gold occurs naturally on Earth.

(a) State what this indicates about the nuclear structure of all the naturally occurring atoms of gold on Earth.

.....

..... [1]

(b) There are several artificially produced isotopes of gold.

Gold-198 ($^{198}_{79}Au$) is an artificial isotope which is used in medicine and in scientific research.

Gold-198 decays by β (beta)-emission to a stable isotope of mercury.

(i) Determine the number of protons and the number of neutrons in a nucleus of this isotope of mercury.

View solution

number of protons = ...

number of neutrons = ...

[2]

(ii) A sample of gold-198 is placed near to a radiation detector in a research laboratory. The count rate is recorded at the same time every day for 32 days.

View solution

The results are used to plot the graph shown in Fig. 9.1.

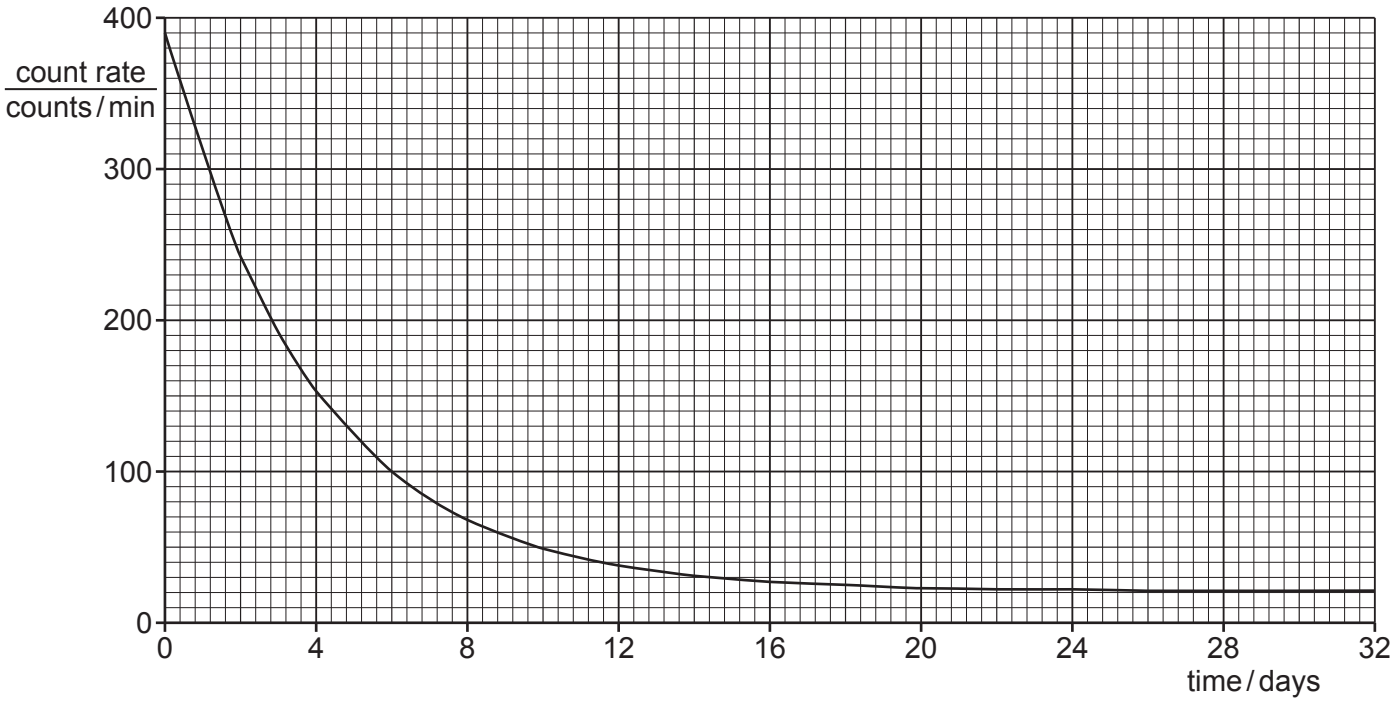

Fig. 9.1

Using Fig. 9.1, determine the background count rate in the research laboratory.

count rate = ... [1]

(iii) Using Fig. 9.1, determine the half-life of gold-198.

View solution

half-life = ... [4]

[Total: 8]

© UCLES 2022

BLANK PAGE

Permission to reproduce items where third-party owned material protected by copyright is included has been sought and cleared where possible. Every reasonable effort has been made by the publisher (UCLES) to trace copyright holders, but if any items requiring clearance have unwittingly been included, the publisher will be pleased to make amends at the earliest possible opportunity.

To avoid the issue of disclosure of answer-related information to candidates, all copyright acknowledgements are reproduced online in the Cambridge Assessment International Education Copyright Acknowledgements Booklet. This is produced for each series of examinations and is freely available to download at www.cambridgeinternational.org after the live examination series.

Cambridge Assessment International Education is part of Cambridge Assessment. Cambridge Assessment is the brand name of the University of Cambridge Local Examinations Syndicate (UCLES), which is a department of the University of Cambridge.

© UCLES 2022