Cambridge Assessment International Education

Cambridge IGCSE™

CANDIDATE NAME									
CENTRE NUMBER						CANDIDATE NUMBER				

PHYSICS **0625/42**

Paper 4 Theory (Extended) **October/November 2022**

1 hour 15 minutes

You must answer on the question paper.

No additional materials are needed.

INSTRUCTIONS

- Answer **all** questions.
- Use a black or dark blue pen. You may use an HB pencil for any diagrams or graphs.
- Write your name, centre number and candidate number in the boxes at the top of the page.
- Write your answer to each question in the space provided.
- Do **not** use an erasable pen or correction fluid.
- Do **not** write on any bar codes.
- You may use a calculator.
- You should show all your working and use appropriate units.
- Take the weight of 1.0 kg to be 10 N (acceleration of free fall = 10 m / s^2).

INFORMATION

- The total mark for this paper is 80.
- The number of marks for each question or part question is shown in brackets [ ].

This document has **16** pages. Any blank pages are indicated.

© UCLES 2022

1 Fig. 1.1 shows sea water flowing down a channel into a tank without splashing. The water is flowing at a rate of 800 kg / min. The length and width of the tank are 3.10 m and 1.20 m. The density of the sea water is 1020 kg / m^3.

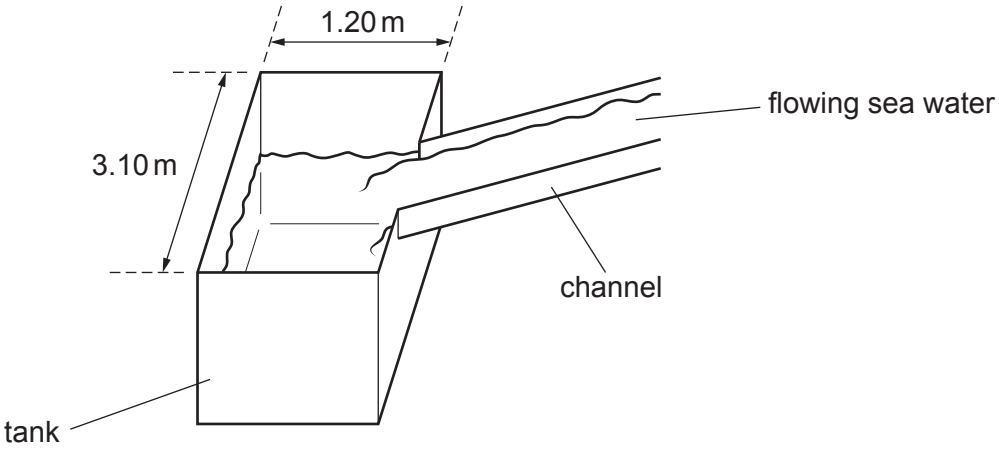

Fig. 1.1 (not to scale)

(a) Initially, the tank is empty.

View solution

Calculate the depth of water in the tank after 1.00 minute. Give your answer to three significant figures.

depth = ... [3]

(b) The height of the water decreases by 0.420 m as it flows down the channel.

View solution

Calculate the decrease in gravitational potential energy of the water each second.

decrease in gravitational potential energy = ... [3]

(c) The water stops flowing. The depth of water in the tank is 0.800 m.

View solution

Calculate the pressure at the bottom of the tank due to the water.

pressure = ... [3]

[Total: 9]

© UCLES 2022

2 **(a)** A pendulum swings with a time period of approximately one second.

View solution

Describe how to use a stop-watch to determine the time period of the pendulum.

.....

.....

.....

..... [3]

(b) Complete Table 2.1 by writing in each space of the right-hand column which **one** of the following devices is used to measure the quantity in the left-hand column.

View solution

digital balance | measuring cylinder | metre rule

micrometer screw gauge | stop-watch | thermocouple

Table 2.1

quantity	device
volume of water in a glass	
width of a small swimming pool	
thickness of a piece of aluminium foil	

[3]

[Total: 6]

© UCLES 2022

3 **(a)** Tidal power derives most of its energy from the Moon and part of its energy from the Sun.

View solution

(i) State **one** other source of power which derives its energy from the Sun.

..... [1]

(ii) State **one** source of power which does **not** derive its energy from the Sun.

View solution

..... [1]

(b) Fig. 3.1 shows a small water turbine driven by a tidal flow of water to generate electrical power.

View solution

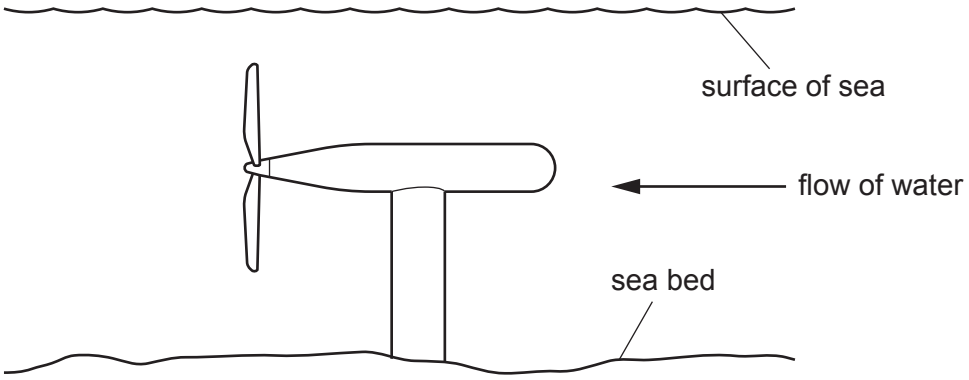

Fig. 3.1

(i) Explain whether this method of generation of electrical power is renewable.

.....

.....

..... [2]

(ii) The mass of water passing through the turbine each second is 6.0×10^3 kg. The speed of the water is 2.0 m/s. 40% of the kinetic energy of the water is converted to electrical energy.

Calculate the electrical power generated.

View solution

power = ... [4]

[Total: 8]

4 **(a)** Explain, in terms of the momentum of particles, how a gas exerts a pressure.

View solution

.....

.....

.....

..... [3]

(b) The temperature of a sample of gas is increased at constant volume.

View solution

State and explain any change in the pressure of the gas.

.....

.....

.....

..... [2]

(c) Another sample of gas is in a sealed container of volume 170 cm^3 and exerts a pressure of 9.0×10^4 Pa. The volume of the container decreases by 70 cm^3 at constant temperature.

View solution

Calculate the new pressure of the gas.

pressure = ... [3]

[Total: 8]

5 Fig. 5.1 shows an aluminium block after leaving a furnace in a factory.

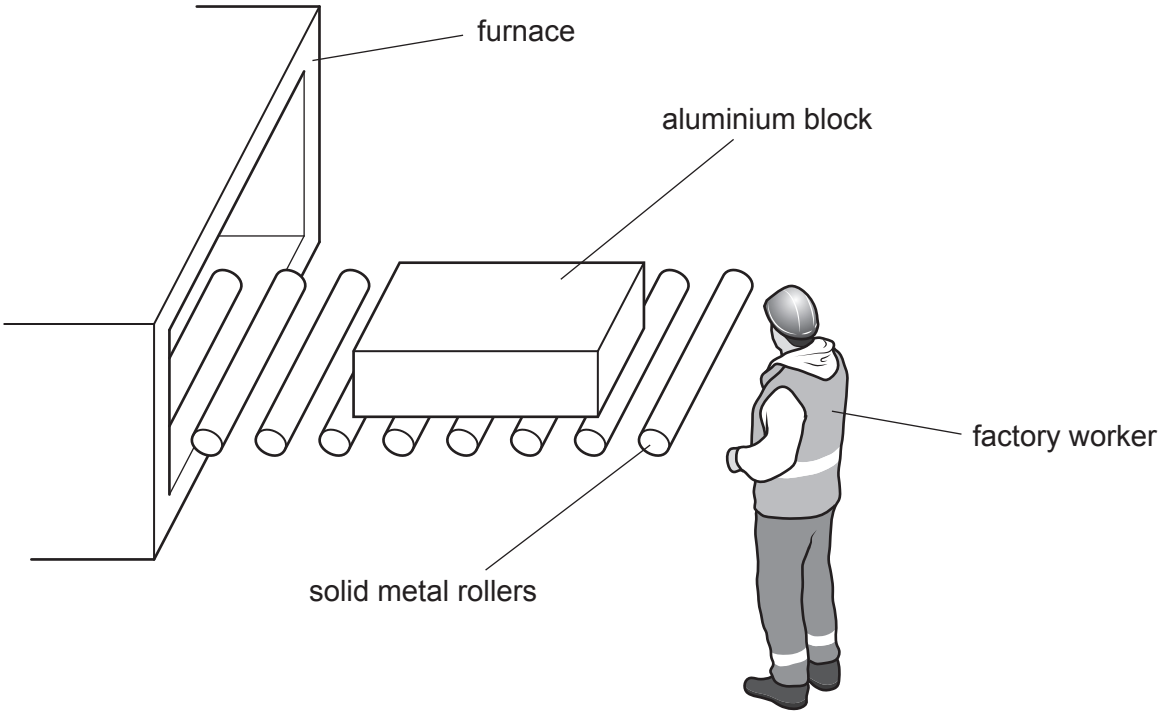

Fig. 5.1

(a) The mass of the block is 1200 kg and it is heated in the furnace from 20 °C to 380 °C. The aluminium block does not melt.
The specific heat capacity of aluminium is 960 J / (kg °C).

View solution

Calculate the thermal energy gained by the block in the furnace.

thermal energy = ... [3]

(b) Fig. 5.1 shows a factory worker standing 3 m from the block.

View solution

State and explain the main process by which thermal energy is transferred to the worker.

.....

.....

.....

..... [3]

(c) State and explain the main process by which thermal energy is transferred from the outer surface of the solid metal rollers to their interior.

.....

.....

.....

..... [3]

[Total: 9]

View solution

6 **(a)** Fig. 6.1 shows a converging lens and an object OX. The focuses of the lens are labelled F.

View solution

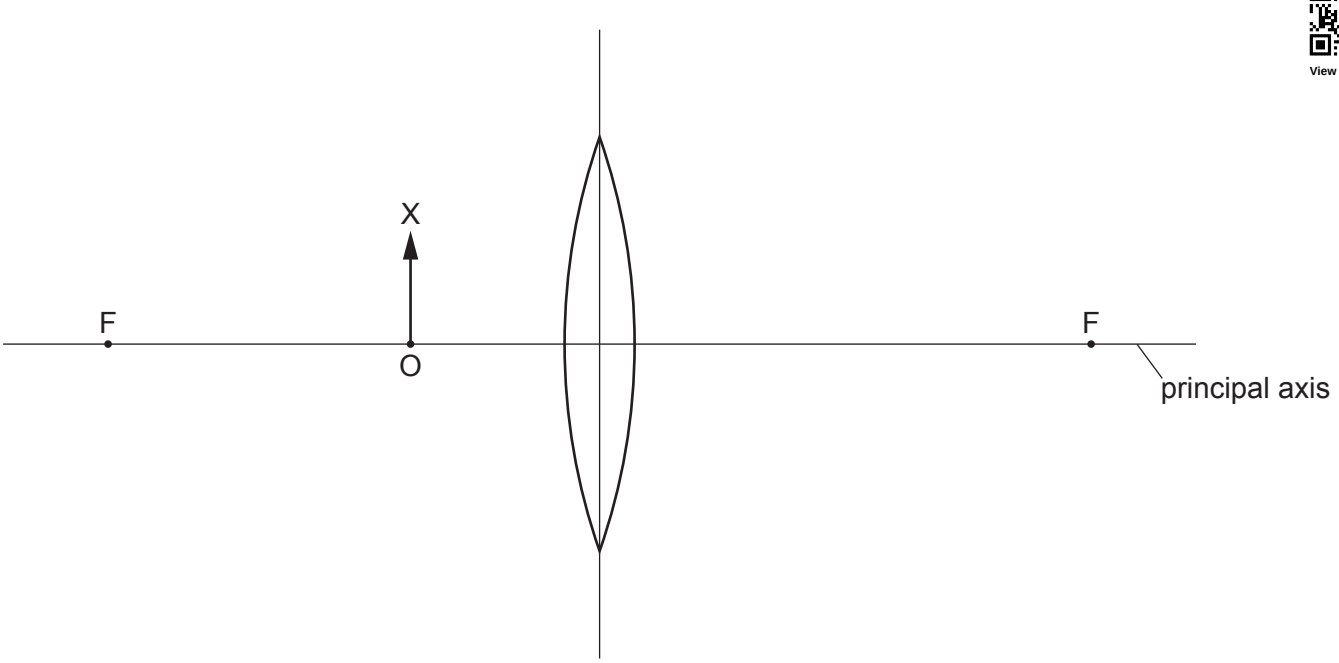

Fig. 6.1

(i) On Fig. 6.1, carefully draw **two** rays from X which locate the image of the object. Draw the image and label it IY.

Measure the distance from IY along the principal axis to the centre line of the lens.

distance = ...

[4]

(ii) State **two** reasons why the image IY is virtual.

View solution

1. .....

2. .....

[2]

(b) Fig. 6.2 shows a ray of green light passing into, through and out of a glass prism.

View solution

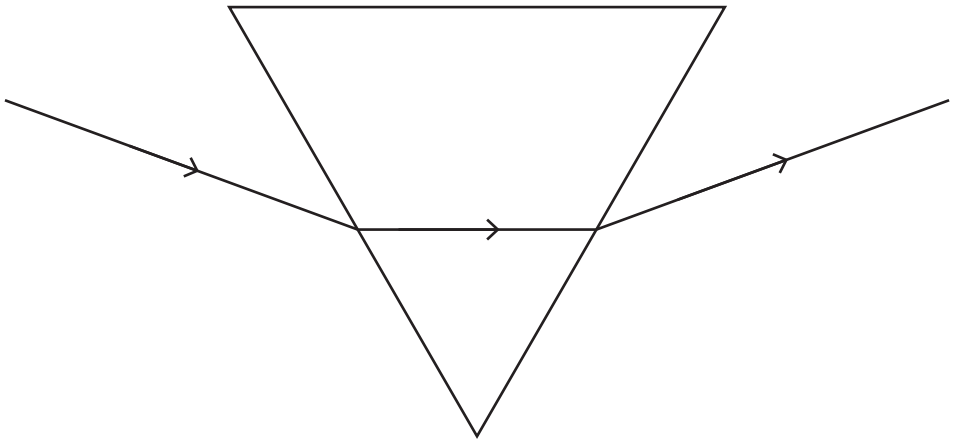

Fig. 6.2

A ray of blue light is incident on the prism on the same path as the incident ray of green light.

On Fig. 6.2, draw the path of the blue light through and out of the prism. [3]

[Total: 9]

7 This question is about the magnetic fields around bar magnets. Fig. 7.1 shows two positions used by a student doing an experiment.



Fig. 7.1

(a) Fig. 7.2 shows a magnet, labelled magnet 1, placed on position 1.

View solution



Fig. 7.2

On Fig. 7.2, draw lines to show the pattern of the magnetic field produced by magnet 1. Place arrows on the lines to show the direction of the field. [3]

(b) Magnet 1 is removed from position 1. Fig. 7.3 shows another magnet, labelled magnet 2, placed on position 2.

View solution



Fig. 7.3

On Fig. 7.3, draw, at the right-hand end of position 1, a line with an arrow to show the direction of the magnetic field produced by magnet 2. [1]

(c) Fig. 7.4 shows magnet 1 placed on position 1 and magnet 2 placed on position 2.

View solution



Fig. 7.4

(i) State the direction of the force that the N pole of magnet 2 exerts on the N pole of magnet 1.

..... [1]

(ii) Justify your answer to **(c)(i)**.

View solution

.....

..... [1]

[Total: 6]

8 Fig. 8.1 shows an electrical circuit.

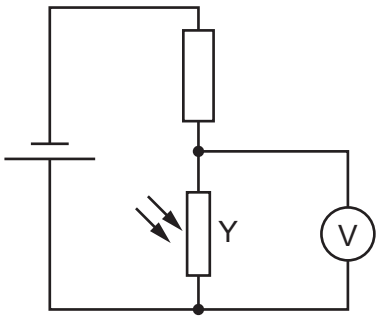

Fig. 8.1

(a) The light intensity at the circuit increases from dark to bright.

State any effect on the resistance of component Y.

.....

State and explain any effect on the reading of the voltmeter.

.....

.....

[3]

(b) The circuit shown in Fig. 8.2 is switched on for 2.0 min.

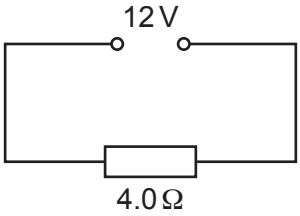

Fig. 8.2

The current in the 4.0 Ω resistor is 3.0 A and the magnitude of the charge on an electron is 1.6×10^{-19} C.

(i) Calculate the number of electrons that pass through the resistor each second.

number = ... [3]

(ii) Calculate the power dissipated by the resistor.

power = ... [2]

[Total: 8]

© UCLES 2022

9 **(a)** Draw the symbol for:

(i) a diode

[1]

(ii) a NOT gate.

[1]

(b) **(i)** Fig. 9.1 shows a digital circuit.

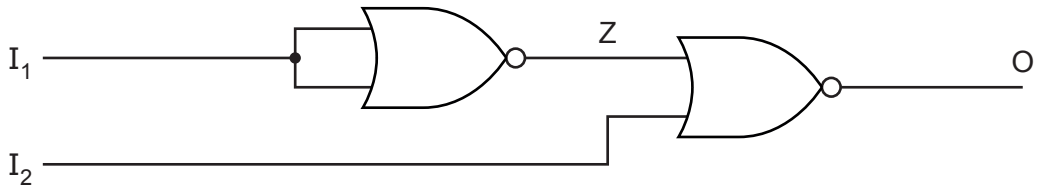

Fig. 9.1

Complete the truth table shown in Table 9.1.

Table 9.1

I_1	I_2	Z	O
0	0		
0	1		
1	0		
1	1		

[2]

(ii) State another single gate which is equivalent to the part of the circuit between I_1 and Z.

..... [1]

(c) Using **two** logic gates, design and draw a digital circuit with two inputs and two outputs which has the truth table shown in Table 9.2.

Use either the usual logic gate symbols or correctly labelled square boxes in your diagram.

Table 9.2

input 1	input 2	output 1	output 2
0	0	0	1
0	1	1	1
1	0	1	1
1	1	1	0

View solution

[4]

[Total: 9]

10 (a) The magnitude of the charge on a β (beta)-particle is 1.6×10^{-19} C.

View solution

(i) State the proton number and nucleon number of an α (alpha)-particle.

proton number .....

nucleon number .....

[2]

(ii) Determine the magnitude of the charge of an α (alpha)-particle.

View solution

charge .....

[1]

(b) A nucleus of radium-230 consists of 88 protons and 142 neutrons. Radium-230 is radioactive and decays by β (beta)-emission to an isotope of actinium. The symbol for radium is Ra and the symbol for actinium is Ac.

View solution

Write down the nuclide equation for this decay.

[3]

(c) The half-life of radium-230 is 93 min. A sample contains 9.6×10^{-12} g of radium-230.

View solution

Calculate the mass of radium in the sample after 279 min.

mass = ... [2]

[Total: 8]

© UCLES 2022

BLANK PAGE

Permission to reproduce items where third-party owned material protected by copyright is included has been sought and cleared where possible. Every reasonable effort has been made by the publisher (UCLES) to trace copyright holders, but if any items requiring clearance have unwittingly been included, the publisher will be pleased to make amends at the earliest possible opportunity.

To avoid the issue of disclosure of answer-related information to candidates, all copyright acknowledgements are reproduced online in the Cambridge Assessment International Education Copyright Acknowledgements Booklet. This is produced for each series of examinations and is freely available to download at www.cambridgeinternational.org after the live examination series.

Cambridge Assessment International Education is part of Cambridge Assessment. Cambridge Assessment is the brand name of the University of Cambridge Local Examinations Syndicate (UCLES), which is a department of the University of Cambridge.

© UCLES 2022