Cambridge Assessment International Education

Cambridge IGCSE™

CANDIDATE NAME									
CENTRE NUMBER						CANDIDATE NUMBER				

PHYSICS **0625/51**

Paper 5 Practical Test **October/November 2022**

1 hour 15 minutes

You must answer on the question paper.

You will need: The materials and apparatus listed in the confidential instructions

INSTRUCTIONS

- Answer **all** questions.
- Use a black or dark blue pen. You may use an HB pencil for any diagrams or graphs.
- Write your name, centre number and candidate number in the boxes at the top of the page.
- Write your answer to each question in the space provided.
- Do **not** use an erasable pen or correction fluid.
- Do **not** write on any bar codes.
- You may use a calculator.
- You should show all your working and use appropriate units.

INFORMATION

- The total mark for this paper is 40.
- The number of marks for each question or part question is shown in brackets [ ].

For Examiner's Use	
1	
2	
3	
4	
Total	

This document has **12** pages. Any blank pages are indicated.

© UCLES 2022

1 In this experiment, you will investigate the period of a pendulum. Carry out the following instructions, referring to Fig. 1.1 and Fig. 1.2.

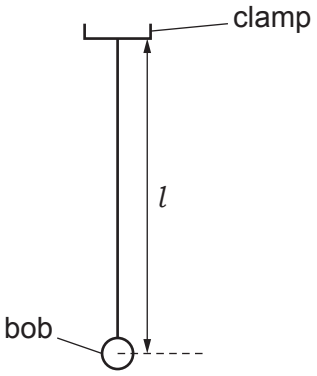

Fig. 1.1

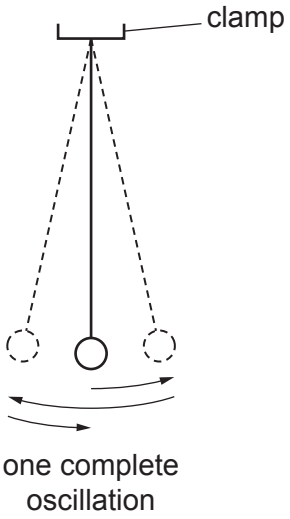

Fig. 1.2

A pendulum has been set up for you as shown in Fig. 1.1.

(a) (i) Measure the distance l between the bottom of the clamp supporting the pendulum and the centre of the pendulum bob.

l = ... cm [1]

(ii) Explain briefly how you measured to the centre of the pendulum bob as accurately as possible.

.....

..... [1]

(b) Adjust the length of the pendulum until the distance l = 50.0 cm.

Displace the bob slightly and release it so that it swings. Fig. 1.2 shows one complete oscillation of the pendulum.

Measure, and record in Table 1.1, the time t for 20 complete oscillations.

Calculate, and record in Table 1.1, the period T of the pendulum. The period is the time for one complete oscillation.

Calculate, and record in Table 1.1, the value of T^2.

Repeat the procedure using l values of 60.0 cm, 70.0 cm, 80.0 cm and 90.0 cm.

© UCLES 2022

Table 1.1

l/cm	t/s	T/s	T^2/s^2
50.0			
60.0			
70.0			
80.0			
90.0			

[4]

(c) Plot a graph of T^2/s^2 (y-axis) against l/cm (x-axis). Start the T^2 axis at a convenient value close to the minimum value of T^2.

View solution

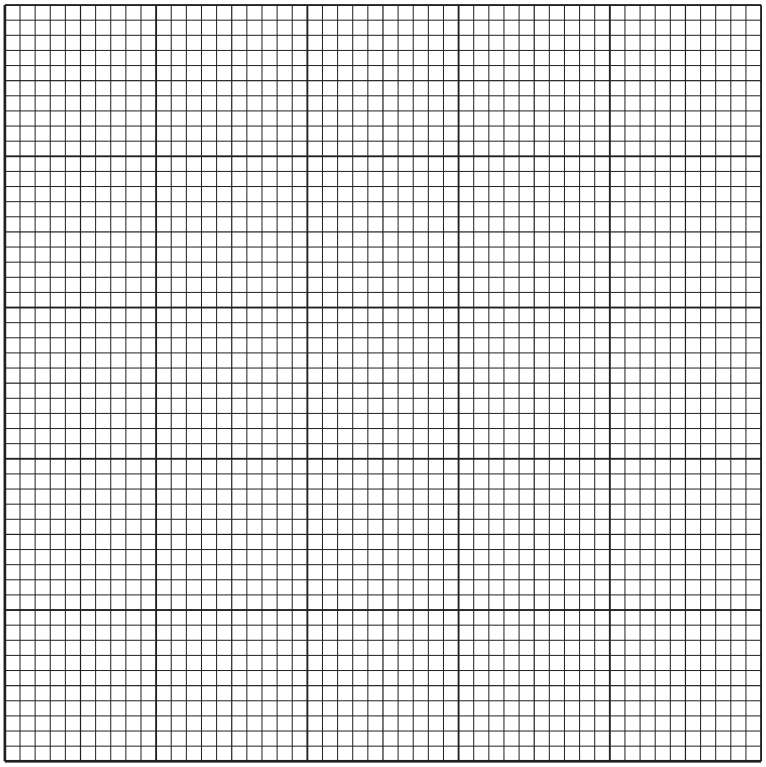

[4]

(d) Explain briefly why timing 20 oscillations gives a more accurate result for the period T than timing 1 oscillation.

.....

..... [1]

[Total: 11]

View solution

© UCLES 2022

2 In this experiment, you will investigate the resistance of a lamp.

Carry out the following instructions, referring to Fig. 2.1.

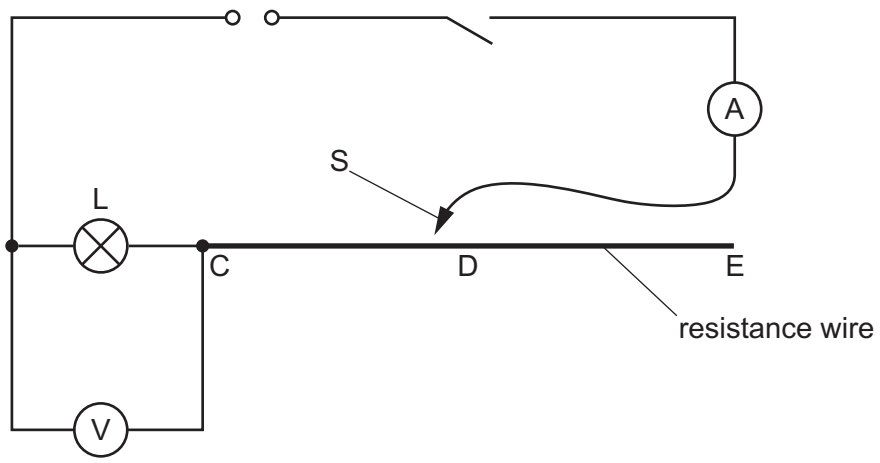

Fig. 2.1

(a) Place the sliding contact S on the resistance wire as close as possible to point C.

View solution

Close the switch.

(i) Measure the current I_1 in the circuit.

I_1 = ... A [1]

(ii) Measure the potential difference (p.d.) V_1 across lamp L. Open the switch. View solution

V_1 = ... V [1]

(iii) Calculate the resistance R_1 of lamp L. Use the equation $R_1 = \frac{V_1}{I_1}$. Include the unit.

View solution

R_1 = ... [1]

(b) Place the sliding contact S on the resistance wire as close as possible to point D. Point D is at the mid-point of the resistance wire.

View solution

Close the switch.

- Measure the current I_2 in the circuit.

I_2 = ... A

- Measure the potential difference V_2 across lamp L.

V_2 = ... V

© UCLES 2022

- Open the switch.
- Calculate the resistance R_2 of lamp L. Use the equation $R_2 = \frac{V_2}{I_2}$. Include the unit.

R_2 = ... [2]

(c) Place the sliding contact S on the resistance wire as close as possible to point E.

View solution

Close the switch.

- Measure the current I_3 in the circuit.

I_3 = ... A

- Measure the potential difference V_3 across lamp L.

V_3 = ... V

- Open the switch.
- Calculate the resistance R_3 of lamp L. Use the equation $R_3 = \frac{V_3}{I_3}$. Include the unit.

  Give your answer to a suitable number of significant figures for this experiment.

R_3 = ... [2]

(d) Complete the following statements, referring to your observations and results.

View solution

1. As the length of resistance wire included in the circuit is increased, the brightness of the lamp ..... .
2. As the length of resistance wire included in the circuit is increased, the resistance of the lamp ..... .

[2]

(e) A variable resistor can be used in this type of experiment in place of the resistance wire.

Draw a circuit diagram to show a variable resistor in place of the resistance wire. Include the ammeter and the voltmeter in your diagram.

View solution

[2]

[Total: 11]

© UCLES 2022

3 In this experiment, you will investigate the effect of the starting temperature on the cooling rate of water.

Carry out the following instructions, referring to Fig. 3.1.

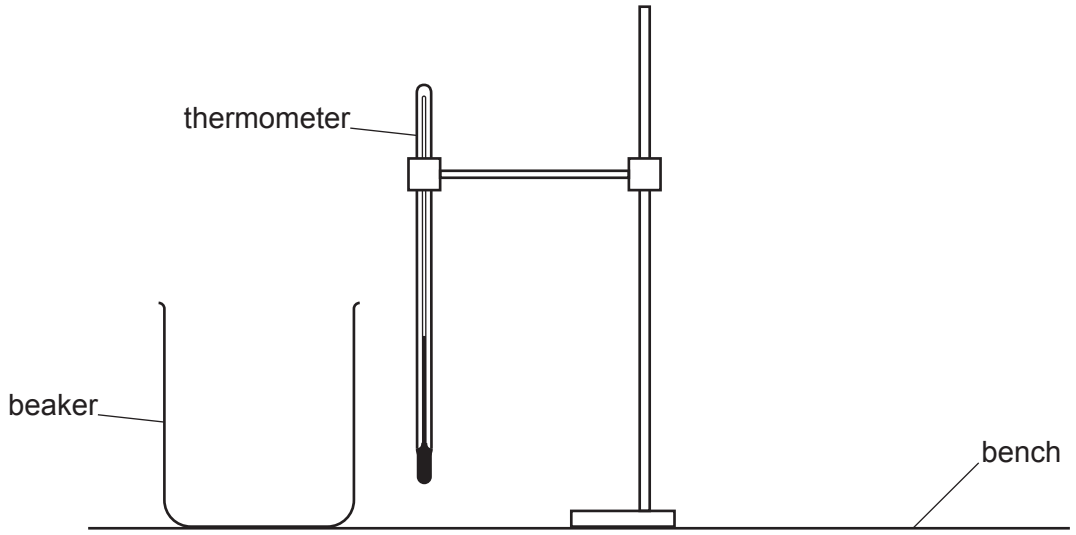

Fig. 3.1

(a) Use the thermometer to measure the room temperature θ_R.

View solution

θ_R = ... °C [1]

(b) Pour 200 cm^3 of hot water into the beaker. Place the thermometer in the hot water.

Record in Table 3.1 the temperature θ of the hot water at time t = 0. Immediately start the stop-watch.

Measure, and record in Table 3.1, the water temperature every 30 s until you have seven sets of readings. [2]

View solution

Table 3.1

t/s	θ/°C
0	
30	
60	
90	
120	
150	
180	

© UCLES 2022

(c) Calculate the decrease in temperature $\Delta\theta_1$ between $t = 0$ and $t = 180\,s$.

$\Delta\theta_1$ = ...

Calculate the average rate of cooling C_1 of the water using the equation $C_1 = \frac{\Delta\theta_1}{\Delta t}$,

where $\Delta t = 180\,s$.

View solution

C_1 = ... [1]

(d) Empty the beaker.

View solution

(i) Using Table 3.1, write down the temperature θ_{90} of the water at time $t = 90\,s$.

θ_{90} = ...

Pour 150 cm^3 of hot water into the beaker. Place the thermometer in the water. Slowly add cold water, stirring continuously, until the temperature of the water in the beaker is as close as possible to θ_{90}. Record this temperature in Table 3.2 at time $t = 0$.

Immediately start the stop-watch.

Measure, and record in Table 3.2, the water temperature every 30 s until you have four sets of readings.

Table 3.2

t/s	θ/°C
0	
30	
60	
90	

[2]

(ii) Using Table 3.2, calculate the decrease in temperature $\Delta\theta_2$ between $t = 0$ and $t = 90\,s$.

$\Delta\theta_2$ = ...

Calculate the average rate of cooling C_2 of the water using the equation $C_2 = \frac{\Delta\theta_2}{\Delta t}$,

where $\Delta t = 90\,s$.

View solution

C_2 = ... [1]

© UCLES 2022

(e) A student suggests that the rate of cooling of water depends on the initial temperature of the water.

Write a conclusion about the effect of the initial temperature of water on the rate of cooling of the water, based on your results. Justify your conclusion by reference to values from your results.

conclusion .....

.....

justification .....

.....

[2]

(f) State **two** requirements when reading the volume of water in the measuring cylinder in order to obtain an accurate result.

1. .....

2. .....

[2]

[Total: 11]

View solution

BLANK PAGE

4 A student investigates the horizontal distance travelled by a metal ball after it rolls off the end of a plastic track. Fig. 4.1 shows the set-up.

The ball rolls down a plastic track. The left-hand side of the track is fixed. The right-hand side can be adjusted so that the ball comes off the track at different angles.

The student measures the horizontal distance that the ball travels from the right-hand end of the track to the point that it hits the floor.

Plan an experiment to investigate how the horizontal distance travelled by the metal ball depends on the angle that the right-hand end of the track makes with the bench.

View solution

You are **not** required to do this experiment.

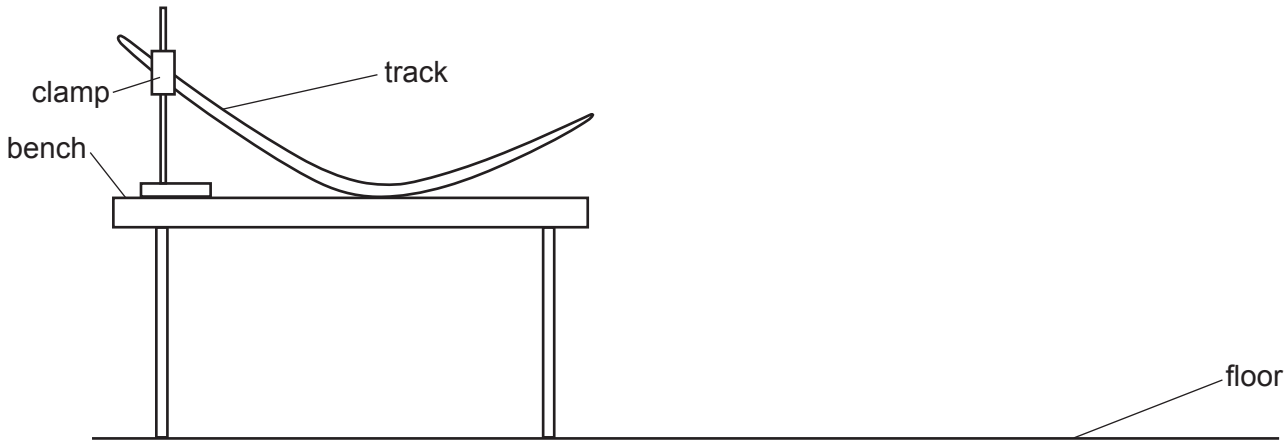

Fig. 4.1

The following apparatus is available to the student:

- track with stand, boss and clamp
- selection of metal balls.

Other apparatus normally available in a school laboratory can also be used.

In your plan, you should:

- list any additional apparatus required
- explain briefly how you would do the investigation, including the measurements you would take
- state the key variables to be kept constant
- draw a suitable table, with column headings, to show how you would display your readings (you are **not** required to enter any readings in the table)
- explain how you would use the results to reach a conclusion.

© UCLES 2022

.....

.....

.....

.....

.....

.....

.....

.....

.....

.....

.....

.....

.....

.....

.....

..... [7]

BLANK PAGE

Permission to reproduce items where third-party owned material protected by copyright is included has been sought and cleared where possible. Every reasonable effort has been made by the publisher (UCLES) to trace copyright holders, but if any items requiring clearance have unwittingly been included, the publisher will be pleased to make amends at the earliest possible opportunity.

To avoid the issue of disclosure of answer-related information to candidates, all copyright acknowledgements are reproduced online in the Cambridge Assessment International Education Copyright Acknowledgements Booklet. This is produced for each series of examinations and is freely available to download at www.cambridgeinternational.org after the live examination series.

Cambridge Assessment International Education is part of Cambridge Assessment. Cambridge Assessment is the brand name of the University of Cambridge Local Examinations Syndicate (UCLES), which is a department of the University of Cambridge.

© UCLES 2022