Cambridge Assessment International Education

Cambridge IGCSE™

CANDIDATE NAME									
CENTRE NUMBER						CANDIDATE NUMBER				

PHYSICS **0625/52**

Paper 5 Practical Test **October/November 2022**

1 hour 15 minutes

You must answer on the question paper.

You will need: The materials and apparatus listed in the confidential instructions

INSTRUCTIONS

- Answer **all** questions.
- Use a black or dark blue pen. You may use an HB pencil for any diagrams or graphs.
- Write your name, centre number and candidate number in the boxes at the top of the page.
- Write your answer to each question in the space provided.
- Do **not** use an erasable pen or correction fluid.
- Do **not** write on any bar codes.
- You may use a calculator.
- You should show all your working and use appropriate units.

INFORMATION

- The total mark for this paper is 40.
- The number of marks for each question or part question is shown in brackets [ ].

For Examiner's Use	
1	
2	
3	
4	
Total	

This document has **12** pages. Any blank pages are indicated.

© UCLES 2022

1 In this experiment, you will investigate temperature changes when mixing hot and cold water.

Carry out the following instructions, referring to Fig. 1.1.

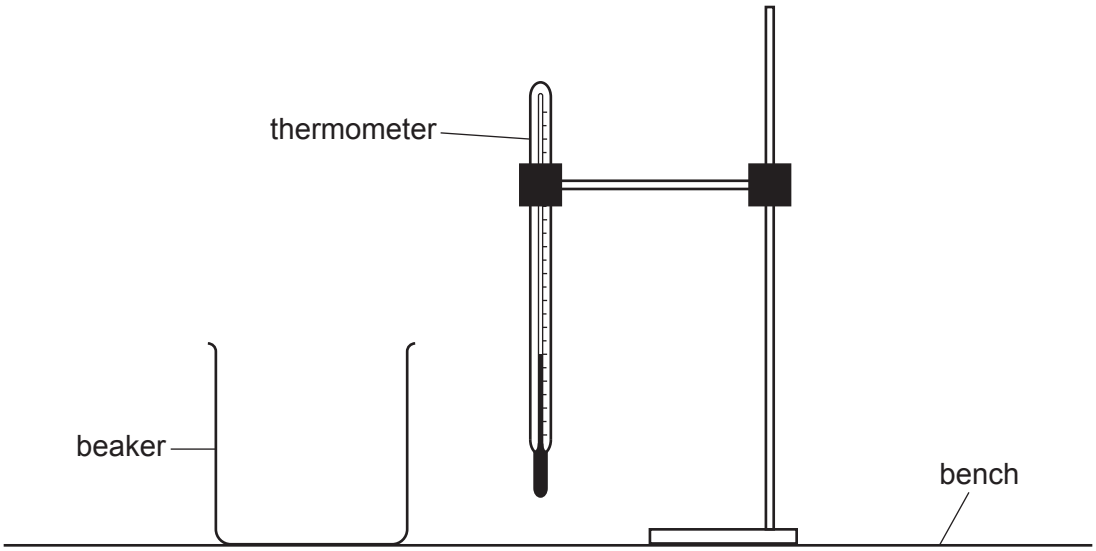

Fig. 1.1

View solution

(a) Use the thermometer to measure room temperature θ_R.

θ_R = ...°C [1]

(b)
- Pour 100 cm^3 of cold water into beaker A.
- Record the temperature θ_C of the cold water. θ_C = ...°C
- Pour 100 cm^3 of the hot water provided into beaker B.
- Record the temperature θ_H of the hot water. θ_H = ...°C
- Immediately pour the cold water into the hot water in beaker B. Stir the mixture and record the highest temperature θ_M of the mixture.

θ_M = ...°C [2]

View solution

(c) **(i)** Calculate the decrease in temperature $\Delta\theta_1$ of the hot water using the equation $\Delta\theta_1 = (\theta_H - \theta_M)$. Include the unit.

View solution

$\Delta\theta_1$ = ... [1]

(ii) Calculate the increase in temperature $\Delta\theta_2$ of the cold water using the equation $\Delta\theta_2 = (\theta_M - \theta_C)$. Include the unit.

View solution

$\Delta\theta_2$ = ... [1]

(d) Calculate the average θ_A of the temperatures θ_H and θ_C.

View solution

Show your working.

θ_A = ...°C
[2]

(e) State whether θ_A and θ_M can be considered to be equal within the limits of experimental accuracy. Justify your answer by reference to your results.

statement .....

.....

justification .....

.....
[2]

(f) State **two** requirements when reading the volume of water in a measuring cylinder to obtain an accurate result.

1. .....

2. .....
[2]

[Total: 11]

View solution

2 In this experiment, you will investigate the position of the image in a plane mirror.

Carry out the following instructions. Use the ray-trace sheet supplied, referring to Fig. 2.1 for guidance.

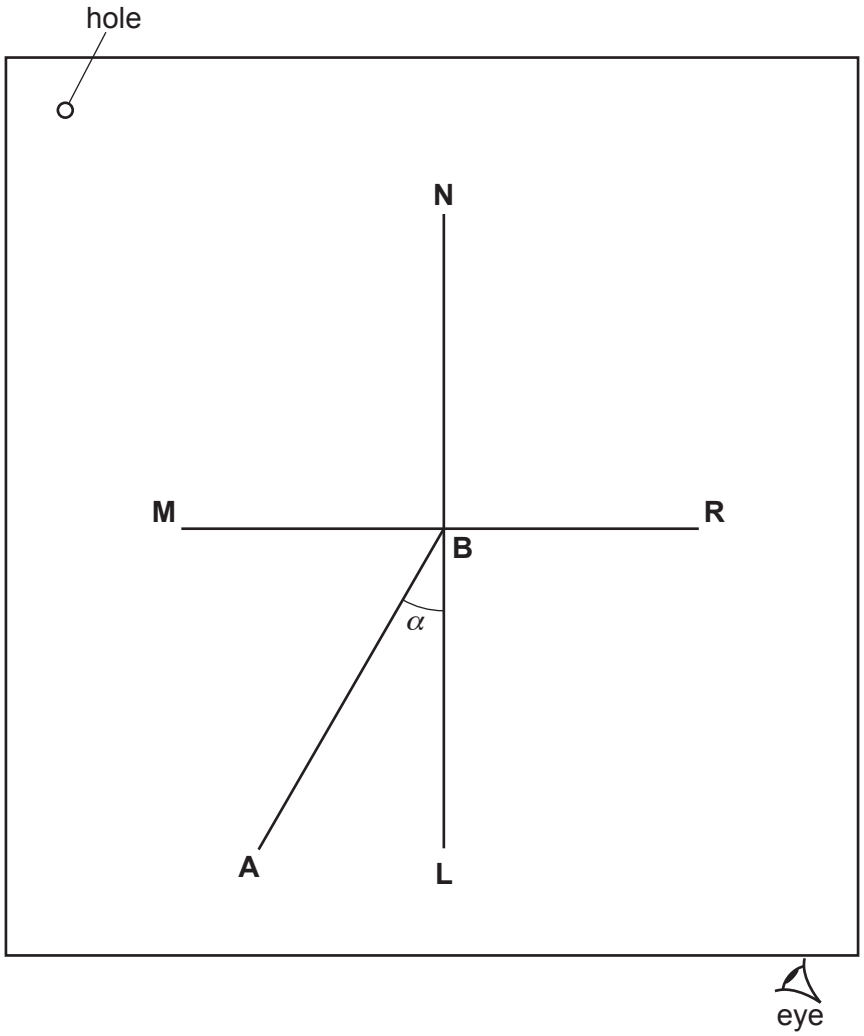

Fig. 2.1

View solution

© UCLES 2022

(a) Draw a line 10 cm long near the middle of the ray-trace sheet. Label the line **MR**. Draw a normal to this line that passes through its centre. Label the normal **NL**. Label the point at which **NL** crosses **MR** with the letter **B**. [1]

(b) Draw a line 7.0 cm long from **B** at an angle of incidence α = 30° to the normal below **MR** and to the left of the normal. Label the end of this line **A**. [1]

(c)
- Place the reflecting face of the mirror vertically on the line **MR**.

View solution

- Place two pins, P_1 and P_2, on line **AB** at a suitable distance apart for this type of ray-trace experiment. Label the positions of P_1 and P_2.
- View the images of pins P_1 and P_2 from the direction indicated by the eye in Fig. 2.1. Place two pins, P_3 and P_4, so that pins P_3 and P_4 and the images of P_2 and P_1 all appear exactly one behind the other. Label the positions of P_3 and P_4.

[2]

(d) Remove the pins and the mirror. Draw a line through the positions of P_3 and P_4. Continue the line until it meets **MR**.

Measure, and record in Table 2.1, the acute angle β between this line and the line **MR**.

View solution

Table 2.1

α/°	β/°	$(\alpha + \beta)$/°
30		
45		

[1]

(e) Repeat the procedure in **(b)**, **(c)** and **(d)** using an angle of incidence α = 45°.

View solution

Record the value of β in Table 2.1. [1]

(f) Calculate, and record in Table 2.1, the values of $(\alpha + \beta)$.

View solution [1]

(g) Suggest a relationship, if any, between the two values of $(\alpha + \beta)$ in Table 2.1.

..... [1]

View solution

(h) In order to investigate further a possible relationship between values of (α + β), more values are required.

Suggest values of the angle of incidence α that you could use. You are **not** required to do this further investigation.

.....

..... [2]

(i) A student does this experiment with care.

Suggest a practical reason why the results may not be exactly those that the theory of reflection predicts.

.....

..... [1]

Tie your ray-trace sheet into this booklet between pages 6 and 7.

[Total: 11]

View solution

3 In this experiment, you will investigate the balancing of a metre rule.

Carry out the following instructions, referring to Fig. 3.1.

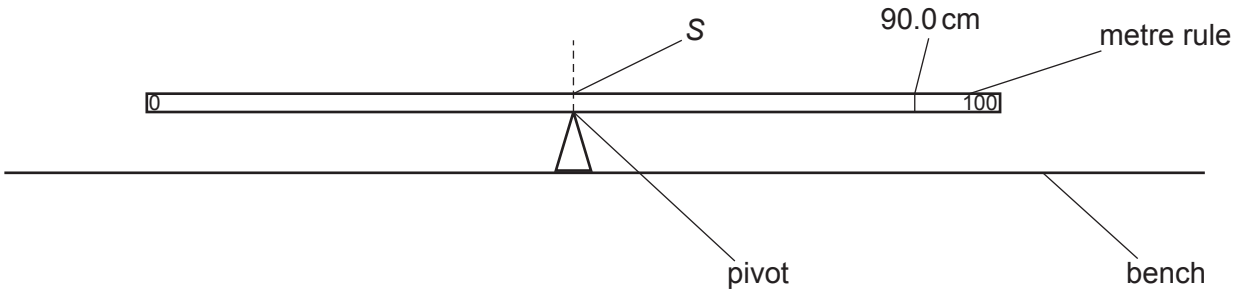

Fig. 3.1

(a) Place the metre rule on the pivot, with its scale facing upwards, so that the metre rule is as near as possible to being balanced. Record the scale reading *S* on the metre rule at the point where the rule balances on the pivot.

View solution

S = ... cm [1]

(b) • Place object Q with its centre on the metre rule at the 90.0 cm mark.

• Place a load P of weight *P* = 1.0 N on the metre rule.

(i) Adjust the position of the load P so that the metre rule is as near as possible to being balanced. The pivot must remain directly below the scale reading *S*.

Measure, and record in Table 3.1, the distance *a* from the centre of load P to the centre of load Q, as shown in Fig. 3.2. [1]

View solution

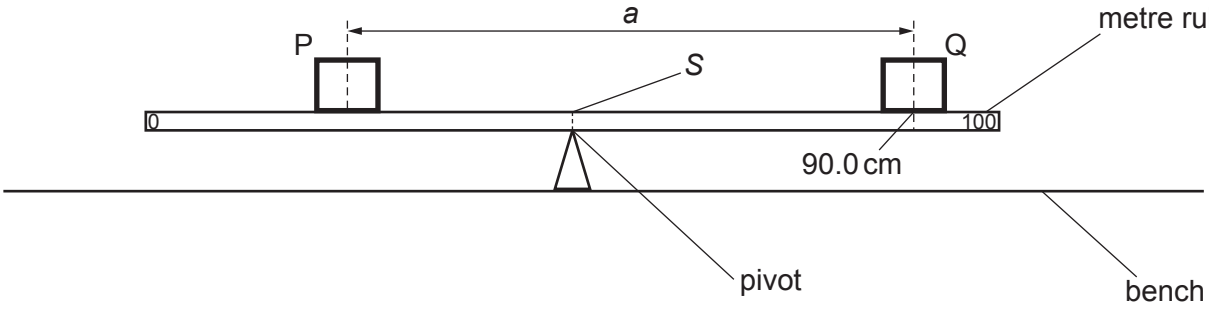

Fig. 3.2

View solution

(ii) Repeat the steps above, using loads of weight *P* = 2.0 N, 3.0 N, 4.0 N and 5.0 N.

Record all the values of *a* in Table 3.1.

Table 3.1

P / N	*a* / cm	$\frac{1}{P}\Big/\frac{1}{\text{N}}$
1.0		1.00
2.0		0.50
3.0		0.33
4.0		0.25
5.0		0.20

[3]

(c) Plot a graph of a/cm (y-axis) against $\frac{1}{P}/\frac{1}{\text{N}}$ (x-axis). Start the y-axis at a/cm = 30. Start the x-axis at 0.

View solution

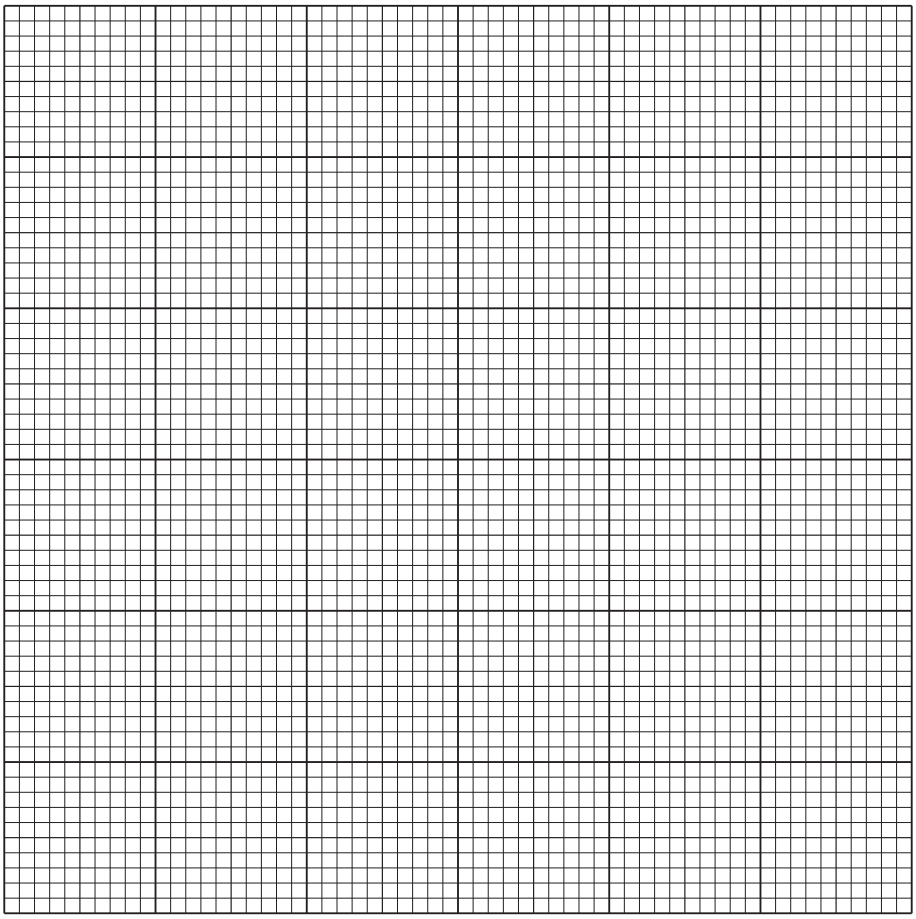

[4]

(d) Record the value of a when $\frac{1}{P} = 0$. Show clearly on the graph how you obtained the necessary information.

a = ... [2]

[Total: 11]

View solution

4 A student investigates the effect on the resistance of a wire when the tension in the wire is increased. The apparatus is shown in Fig. 4.1. The tension in the wire is increased by adding loads to the hook attached to the wire. The student measures the current I in the wire and the potential difference (p.d.) V across the wire. She determines the resistance R of the wire using the equation $R = \frac{V}{I}$.

View solution

You are **not** required to carry out this investigation.

The student takes all the necessary safety precautions. You are **not** required to write about safety precautions.

The following apparatus is available:

- resistance wire
- power source, connecting wires and crocodile clips
- ammeter
- voltmeter
- selection of loads and a hanger.

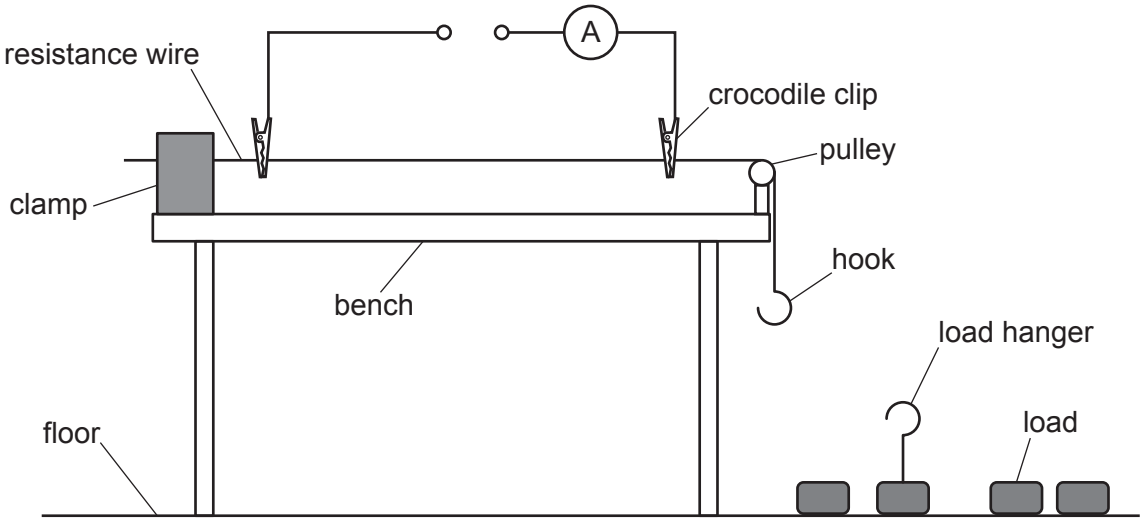

Fig. 4.1

Plan an experiment to investigate the effect on the resistance of a wire when the tension in the wire is increased.

You should:

- complete the circuit diagram in Fig. 4.1 to show a voltmeter connected to measure the potential difference across the resistance wire
- explain briefly how you would carry out the investigation
- state the key variables that you would keep constant
- draw a table, or tables, with column headings, to show how you would display your readings (you are **not** required to enter any readings in the table)
- explain how you would use your readings to reach a conclusion.

.....

.....

.....

.....

.....

.....

.....

.....

.....

.....

..... [7]

BLANK PAGE

Permission to reproduce items where third-party owned material protected by copyright is included has been sought and cleared where possible. Every reasonable effort has been made by the publisher (UCLES) to trace copyright holders, but if any items requiring clearance have unwittingly been included, the publisher will be pleased to make amends at the earliest possible opportunity.

To avoid the issue of disclosure of answer-related information to candidates, all copyright acknowledgements are reproduced online in the Cambridge Assessment International Education Copyright Acknowledgements Booklet. This is produced for each series of examinations and is freely available to download at www.cambridgeinternational.org after the live examination series.

Cambridge Assessment International Education is part of Cambridge Assessment. Cambridge Assessment is the brand name of the University of Cambridge Local Examinations Syndicate (UCLES), which is a department of the University of Cambridge.

© UCLES 2022