Cambridge Assessment International Education

Cambridge IGCSE™

CANDIDATE NAME									
CENTRE NUMBER						CANDIDATE NUMBER				

PHYSICS **0625/53**

Paper 5 Practical Test **October/November 2022**

1 hour 15 minutes

You must answer on the question paper.

You will need: The materials and apparatus listed in the confidential instructions

INSTRUCTIONS

- Answer **all** questions.
- Use a black or dark blue pen. You may use an HB pencil for any diagrams or graphs.
- Write your name, centre number and candidate number in the boxes at the top of the page.
- Write your answer to each question in the space provided.
- Do **not** use an erasable pen or correction fluid.
- Do **not** write on any bar codes.
- You may use a calculator.
- You should show all your working and use appropriate units.

INFORMATION

- The total mark for this paper is 40.
- The number of marks for each question or part question is shown in brackets [ ].

For Examiner's Use	
1	
2	
3	
4	
Total	

This document has **16** pages. Any blank pages are indicated.

© UCLES 2022

BLANK PAGE

1 In this experiment, you will investigate the dimensions of a boiling tube.
The apparatus has been set up for you.

Carry out the following instructions, referring to Fig. 1.1.

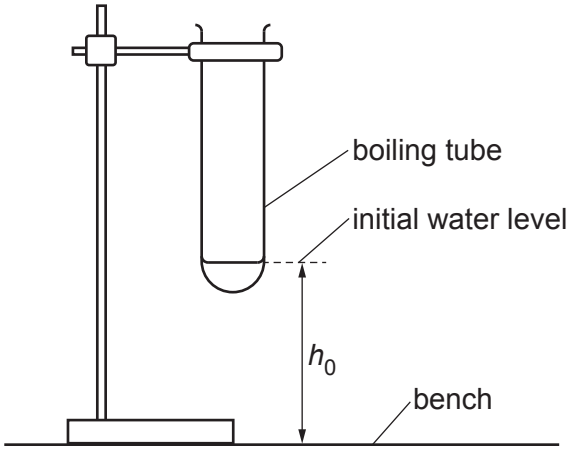

Fig. 1.1

View solution

(a) Pour approximately 3 cm^3 of water into the boiling tube.

Measure the height h_0 of the water level from the bench, as shown in Fig. 1.1.

h_0 = ... cm

Suggest **one** precaution that is taken when measuring the height of the water level to ensure the reading is accurate.
You may draw a diagram if it helps your explanation.

.....

..... [1]

© UCLES 2022

(b) Using the dropping pipette, and measuring cylinder if necessary, add a further volume of water $V = 5.0\,cm^3$ to the water already in the boiling tube.

View solution

Measure, and record in Table 1.1, the new height h of the water level from the bench.

Repeat this procedure, adding $5.0\,cm^3$ of water each time so that the total volume of water added $V = 10.0\,cm^3$, $15.0\,cm^3$, $20.0\,cm^3$ and $25.0\,cm^3$.

Table 1.1

V / cm^3	h / cm	H / cm
5.0		
10.0		
15.0		
20.0		
25.0		

[1]

(c) For each value of V, calculate, and record in Table 1.1, the increase in height H of the water in the boiling tube. Use your value of h_0 from **(a)**, the values of h in Table 1.1 and the equation $H = (h - h_0)$. [1]

View solution

(d) Plot a graph of V/cm^3 (y-axis) against H/cm (x-axis).

View solution

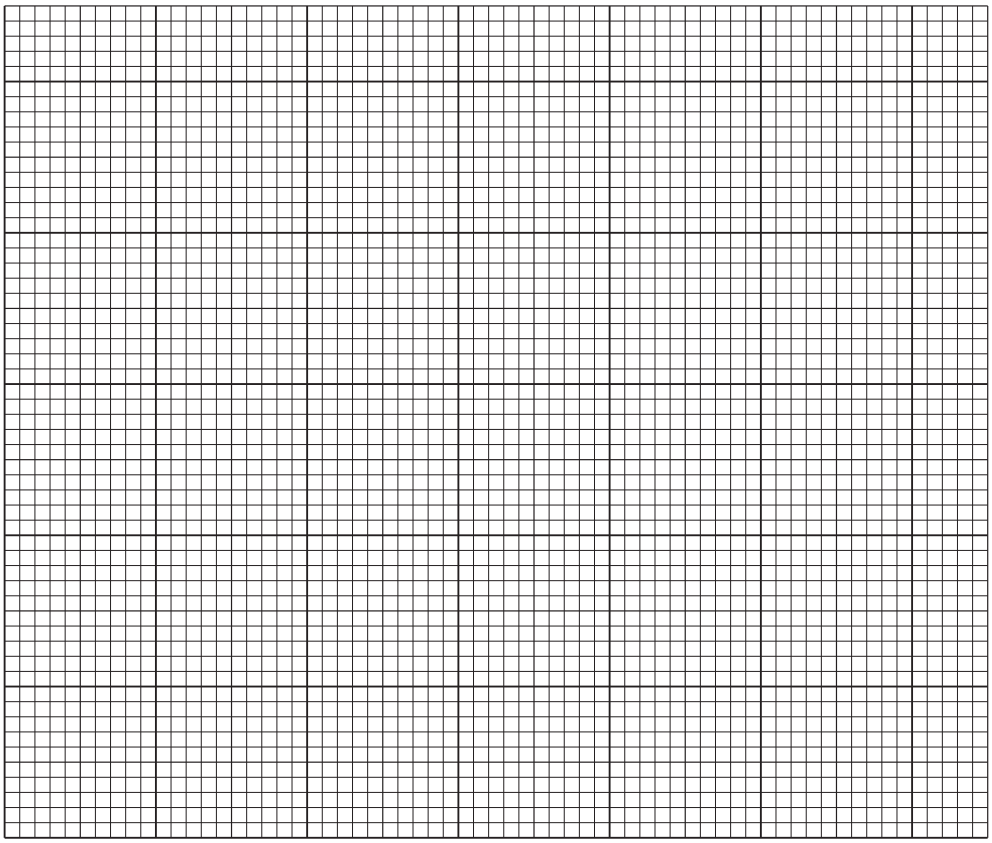

[4]

(e) (i) Determine the gradient of the graph. Show clearly on the graph how you obtained the necessary information.

View solution

gradient = ... [1]

(ii) Calculate D, the inside diameter of the boiling tube.

View solution

Use the equation $D = \sqrt{\frac{4G}{\pi}}$, where G is numerically equivalent to the gradient in **(e)(i)**.

D = ... cm [1]

© UCLES 2022

(f) Suggest why it is important to add a small amount of water at the start of the experiment.

.....

..... [1]

(g) A student uses this experiment to measure *D* for a small test-tube of diameter approximately 1.2 cm and length 7.5 cm. He adds water in volumes of 1.0 cm^3 at a time.
State and explain **one** reason why this is **not** an accurate method to use for this test-tube.

View solution

.....

..... [1]

[Total: 11]

BLANK PAGE

2 In this experiment, you will investigate the effect of the colour of the outside surface of a beaker on the rate of cooling of water in the beaker.

Carry out the following instructions, referring to Fig. 2.1.

Beaker A is covered with thin black card.
Beaker B is covered with shiny metal foil.

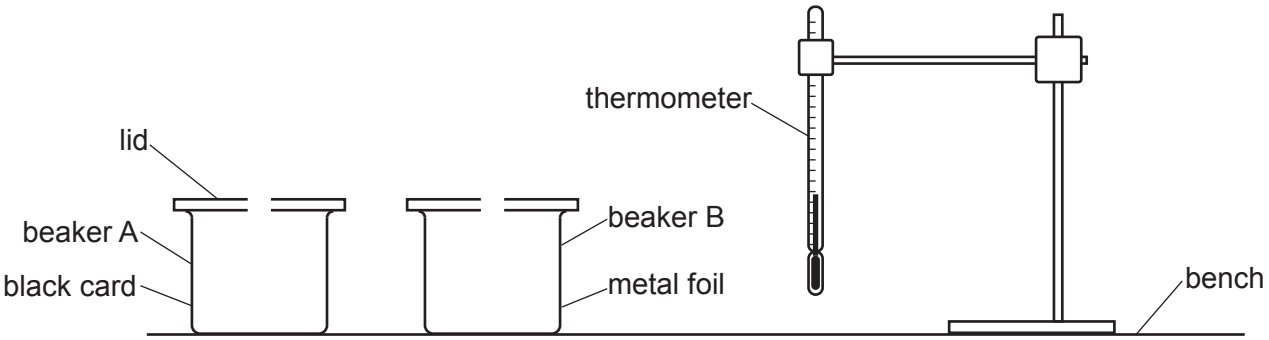

Fig. 2.1

View solution

(a) Remove the lid from beaker A.
Pour 150 cm^3 of hot water into beaker A and replace the lid.
Place the thermometer in the water.

In the first row of Table 2.1, record the temperature θ of the water at time $t = 0$ and immediately start the stop-clock.
Record the temperature θ of the water at $t = 30$ s, $t = 60$ s, $t = 90$ s, $t = 120$ s, $t = 150$ s and $t = 180$ s.

Remove the thermometer from the beaker. [1]

(b) **(i)** Repeat **(a)** for beaker B. [2]

(ii) Add units to the column headings in Table 2.1. [1]

View solution

Table 2.1

	beaker A with black card	beaker B with shiny foil
t/	θ/	θ/
0		
30		
60		
90		
120		
150		
180		

© UCLES 2022

(c) Write a conclusion stating if the colour of the outside surface of the beaker affects the rate of cooling of the water in the beaker.
Justify your answer by reference to values from your results.

View solution

.....

.....

.....

..... [2]

(d) **(i)** Calculate the average cooling rate x_A for the water in beaker A during the experiment.
Use your readings for beaker A from Table 2.1 and the equation

View solution

$$x_A = \frac{\theta_0 - \theta_{180}}{T}$$

where T = 180 s and θ_0 and θ_{180} are the temperatures of the water in beaker A at times t = 0 and t = 180 s.
Include the unit for the cooling rate.

x_A = ... [1]

(ii) Calculate the average cooling rate x_B for the water in beaker B during the experiment.
Use your readings for beaker B from Table 2.1 and the equation

View solution

$$x_B = \frac{\theta_0 - \theta_{180}}{T}$$

where T = 180 s and θ_0 and θ_{180} are the temperatures of the water in beaker B at times t = 0 and t = 180 s.
Include the unit.

x_B = ... [1]

© UCLES 2022

(e) (i) A student states that the black card is a thermal insulator. He thinks this will affect the result.

View solution

Suggest an additional experiment to test this theory.

You are **not** required to carry out this additional experiment.

.....

.....

..... [1]

(ii) Suggest **one** variable which should be kept the same for this additional experiment so that the comparison with your experiment is fair. Assume that the same type of beaker is used.

.....

.....

..... [1]

(iii) State how the cooling rate of beaker A from the additional experiment is likely to compare with x_A from **(d)(i)** if the student's theory is correct. Explain your answer.

statement .....

explanation .....

.....
[1]

[Total: 11]

© UCLES 2022

3 In this experiment, you will investigate circuits containing resistors in parallel.
The first circuit has been set up for you.

Carry out the following instructions, referring to Fig. 3.1.

All numeric answers must have appropriate units.

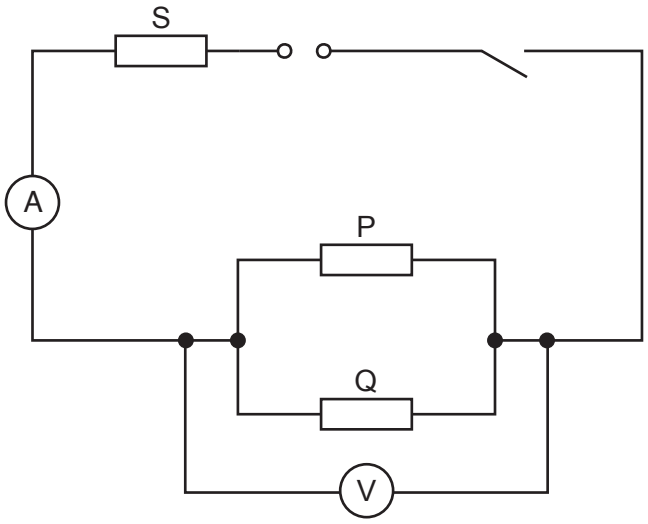

Fig. 3.1

(a) (i) Close the switch.

View solution

Measure the potential difference (p.d.) V across the parallel combination of resistors P and Q.

V = ...

Measure the current I_T in the circuit.

I_T = ...

[2]

Open the switch.

(ii) Calculate the resistance R_{PQ} of the parallel combination of resistors P and Q.
Use your readings from **(a)(i)** and the equation $R_{PQ} = \frac{V}{I_T}$.

View solution

R_{PQ} = ... [1]

(iii) Disconnect the voltmeter and reconnect it to measure the potential difference across resistor S.

View solution

Close the switch.

Measure the potential difference V_S across resistor S.

V_S = ...

Open the switch.

Disconnect the voltmeter from the circuit.

Calculate the resistance R_S of resistor S.

Use your readings from **(a)(i)**, **(a)(iii)** and the equation $R_S = \frac{V_S}{I_T}$.

R_S = ... [2]

(b) Disconnect the ammeter and reconnect it as shown in Fig. 3.2.

View solution

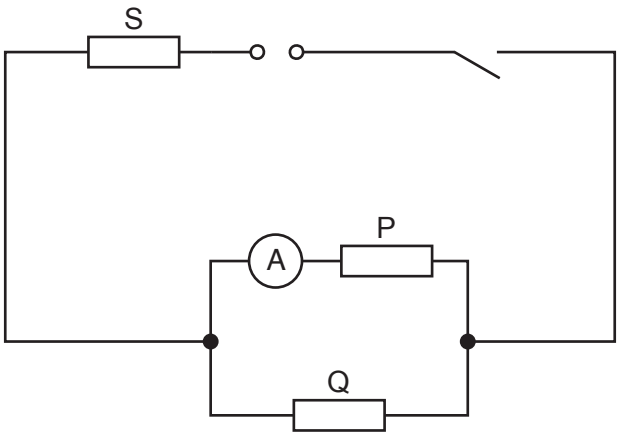

Fig. 3.2

Close the switch.

Measure the current I_P in resistor P.

I_P = ... [1]

Open the switch.

(c) Disconnect the ammeter and reconnect it as shown in Fig. 3.3.

View solution

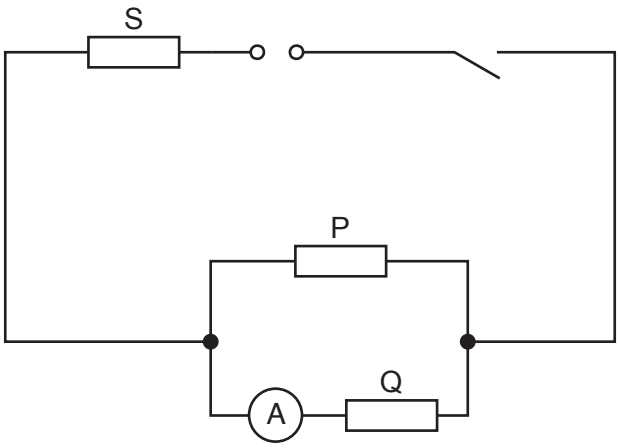

Fig. 3.3

Close the switch.

Measure the current I_Q in resistor Q.

I_Q = ... [2]

Open the switch.

(d) A student suggests that I_T should be equal to $I_P + I_Q$.
State whether your results support this suggestion. Justify your statement by reference to values from your results.

statement .....

justification .....

.....

.....

[1]

View solution

(e) (i) A student changes the circuit and uses a variable resistor to control the current in the circuit.
In the space provided, draw the circuit symbol for a variable resistor.

View solution

Mark with an X on Fig. 3.3 where a variable resistor is connected to control the current in resistor S without affecting the resistance of either of the parallel branches. [1]

(ii) The current in the circuit can be controlled by connecting a range of different resistors in place of resistors P and Q.

State **one** disadvantage of this method instead of using a variable resistor to control the current.

.....

..... [1]

[Total: 11]

View solution

4 A student investigates the effect of temperature on the bounce height of a squash ball.
A squash ball is a hollow rubber ball approximately 4 cm in diameter.

View solution

Plan an experiment to investigate how the bounce height of the ball changes as the temperature of the ball rises.

You are **not** required to carry out the experiment.

The apparatus available includes:
- a selection of squash balls
- standard laboratory heating equipment
- a beaker large enough for the squash ball to fit inside
- a supply of cold water.

In your plan, you should:

- list any additional apparatus needed
- explain briefly how to do the experiment, including any precautions to ensure reliable results (you may draw a diagram below if it helps to explain your plan)
- state the key variables to be kept constant
- draw a table, or tables, with column headings, to show how to display the readings (you are **not** required to enter any readings in the table)
- explain how to use the readings to reach a conclusion.

© UCLES 2022

.....

.....

.....