Cambridge Assessment International Education

Cambridge IGCSE™

CANDIDATE NAME									
CENTRE NUMBER						CANDIDATE NUMBER				

PHYSICS **0625/62**

Paper 6 Alternative to Practical **October/November 2022**

1 hour

You must answer on the question paper.

No additional materials are needed.

INSTRUCTIONS

- Answer **all** questions.
- Use a black or dark blue pen. You may use an HB pencil for any diagrams or graphs.
- Write your name, centre number and candidate number in the boxes at the top of the page.
- Write your answer to each question in the space provided.
- Do **not** use an erasable pen or correction fluid.
- Do **not** write on any bar codes.
- You may use a calculator.
- You should show all your working and use appropriate units.

INFORMATION

- The total mark for this paper is 40.
- The number of marks for each question or part question is shown in brackets [ ].

This document has **12** pages. Any blank pages are indicated.

© UCLES 2022

1 A student investigates temperature changes when mixing hot and cold water.

Fig. 1.1 shows the set-up.

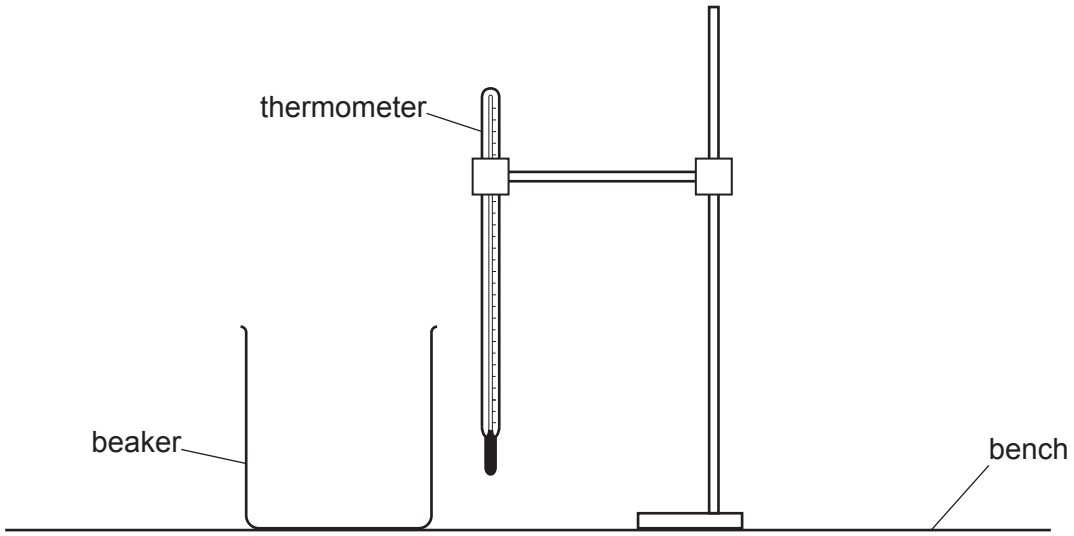

Fig. 1.1

(a) The thermometer in Fig. 1.2 shows room temperature θ_R at the beginning of the experiment. Record θ_R.

View solution

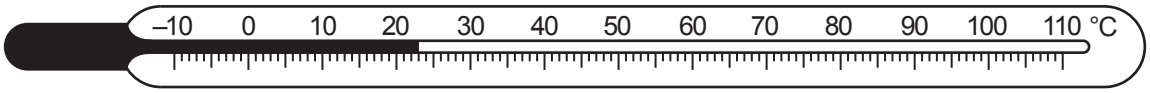

Fig. 1.2

θ_R = ... °C [1]

(b) The student records the temperature θ_C of a supply of cold water.

θ_C = ... 19 ..... °C

She records the temperature θ_H of a supply of hot water.

θ_H = ... 88 ..... °C

She immediately pours 100 cm^3 of the hot water into a beaker containing 100 cm^3 of the cold water. She records the highest temperature θ_M of the mixture.

θ_M = ... 46 ..... °C

View solution

(i) Suggest **two** precautions that you would take to obtain an accurate value for the highest temperature θ_M of the mixture.

1. .....

.....

2. .....

.....

[2]

(ii) Calculate the decrease in temperature $\Delta\theta_1$ of the hot water using the equation $\Delta\theta_1 = (\theta_H - \theta_M)$. Include the unit.

View solution

$\Delta\theta_1$ = ...

Calculate the increase in temperature $\Delta\theta_2$ of the cold water using the equation $\Delta\theta_2 = (\theta_M - \theta_C)$. Include the unit.

$\Delta\theta_2$ = ...

[2]

(c) Calculate the average θ_A of the temperatures θ_H and θ_C. Show your working. Include the unit.

View solution

θ_A = ... [2]

(d) State whether θ_A and θ_M can be considered to be equal within the limits of experimental accuracy. Justify your answer by reference to the results.

statement .....

.....

justification .....

.....

[2]

(e) State **two** requirements when reading the volume of water in a measuring cylinder to obtain an accurate result.

1. .....

2. .....

[2]

[Total: 11]

View solution

2 A student investigates the position of the image in a plane mirror.

Fig. 2.1 shows the ray-trace sheet.

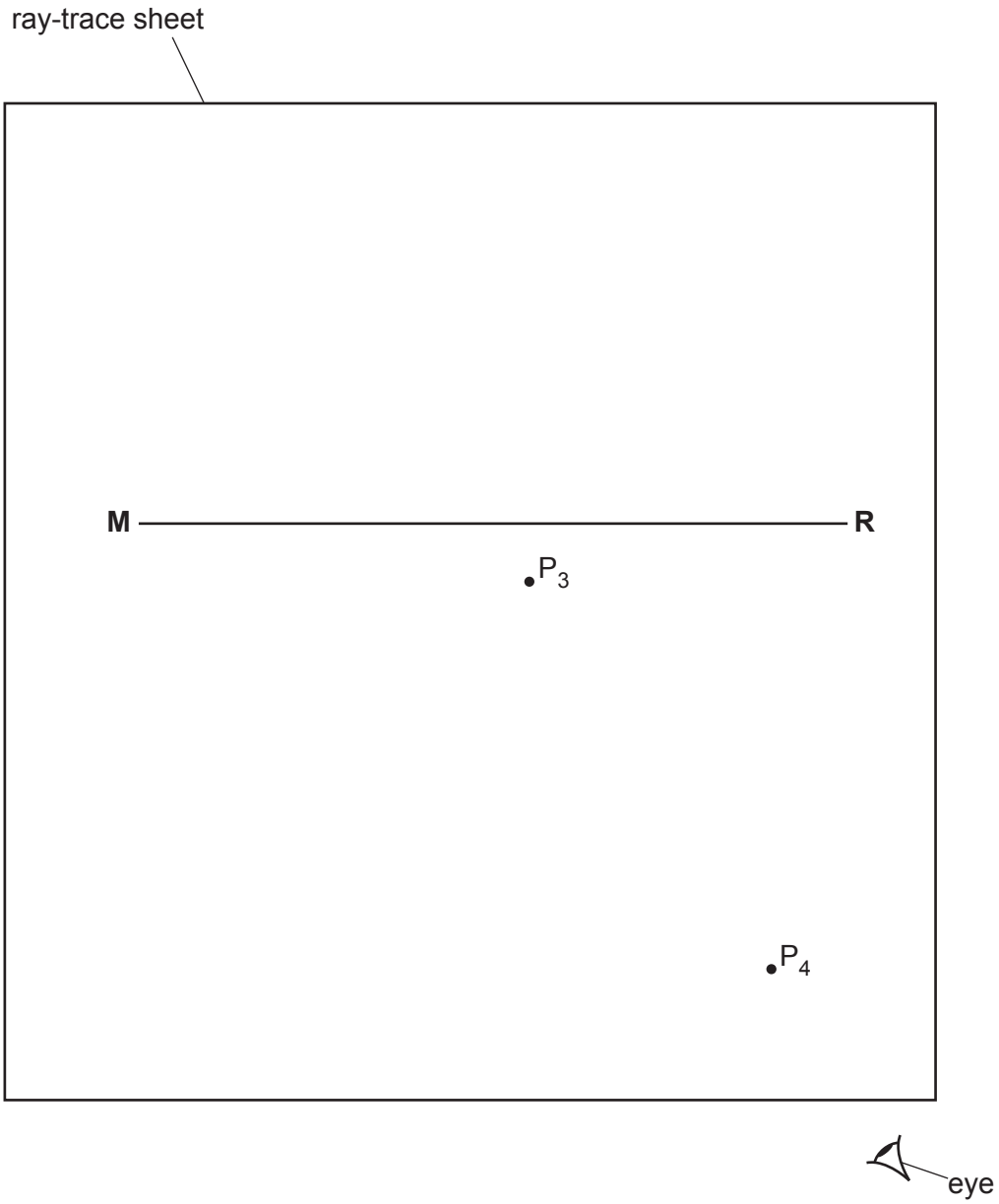

Fig. 2.1

View solution

© UCLES 2022

(a) Line **MR** shows the position of the plane mirror. Draw a normal to this line that passes through its centre. Label the normal **NL**. Label the point at which **NL** crosses **MR** with the letter **B**. [1]

(b) Draw a line 7.0 cm long from **B** at an angle of incidence $\alpha = 30°$ to the normal below **MR** and to the left of the normal. Label the end of this line **A**. [1]

(c) • The student places the reflecting face of the mirror vertically on the line **MR**.

• He places two pins, P_1 and P_2, on line **AB** at a suitable distance apart for this type of ray-trace experiment.

(i) Suggest a suitable distance apart for pins P_1 and P_2 for this type of ray-trace experiment.

distance = ... [1]

(ii) State the reason for your suggested distance.

View solution

.....

..... [1]

(d) • The student views the images of pins P_1 and P_2 from the direction indicated by the eye in Fig. 2.1.

• He places two pins, P_3 and P_4, so that pins P_3 and P_4 and the images of P_2 and P_1 all appear exactly one behind the other. The positions of P_3 and P_4 are marked on Fig. 2.1.

Draw a line through the positions of P_3 and P_4. Continue the line until it meets **MR**. View solution

(i) Measure, and record in Table 2.1, the acute angle β between the line through the positions of P_3 and P_4 and the line **MR**. [1]

(ii) Add units to the column headings in Table 2.1.

View solution

Table 2.1

α/	β/	$(\alpha + \beta)$/
30		
45	46	

[1]

(e) The student places the reflecting face of the mirror vertically on the line **MR** with the centre of the mirror at **B**.

He repeats the procedure using an angle of incidence α = 45°. The values of α and β are recorded in Table 2.1.

Calculate, and record in Table 2.1, the values of $(\alpha + \beta)$. [1]

(f) Suggest a relationship, if any, between the two values of $(\alpha + \beta)$ in Table 2.1. View solution

..... [1]

(g) In order to investigate further a possible relationship between values of $(\alpha + \beta)$, more values are required.

View solution

Suggest values of the angle of incidence α that the student could use.

.....

..... [2]

(h) The student does this experiment with care.

Suggest a practical reason why the results may not be exactly those that the theory of reflection predicts.

.....

..... [1]

[Total: 11]

View solution

3 A student investigates the balancing of a metre rule.

Fig. 3.1 shows the set-up.

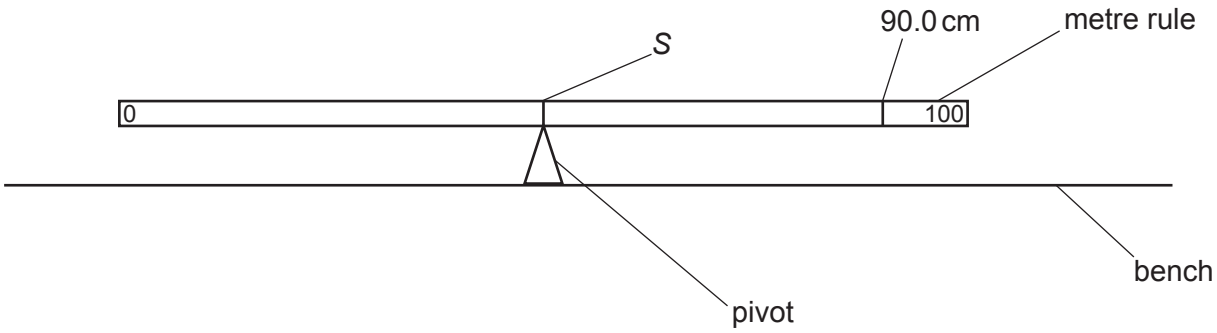

Fig. 3.1

(a) The student places the metre rule on the pivot so that the metre rule is as near as possible to being balanced. Fig. 3.2 shows the position of the pivot.

View solution

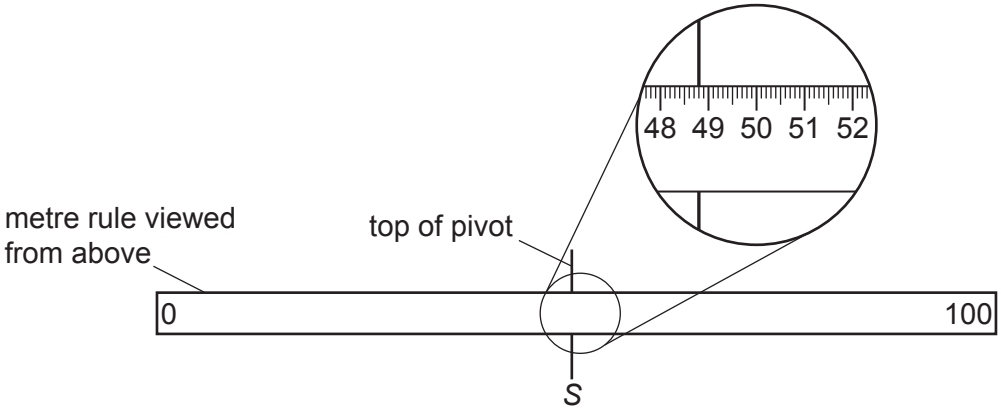

Fig. 3.2

Record the scale reading *S* on the metre rule at the point where the rule balances on the pivot.

S = ... cm [1]

(b) The metre rule is 4 mm thick. The pivot is under the metre rule. The scale is on the top of the metre rule. Suggest how you would obtain an accurate value of the scale reading *S*.

.....

..... [1]

View solution

(c)
- The student places an object Q with its centre on the metre rule at the 90.0 cm mark. The position of Q is not changed during the experiment.
- He places a load P of weight P = 1.0 N on the metre rule.
- He adjusts the position of load P so that the metre rule is as near as possible to being balanced with the pivot directly below the scale reading S.
- He records, in Table 3.1, the distance a from the centre of load P to the centre of load Q.
- He repeats the procedure using loads of weight P = 2.0 N, 3.0 N, 4.0 N and 5.0 N.
- He records all the values of a in Table 3.1.

View solution

Complete the column headings in Table 3.1 by inserting the unit in the $\frac{1}{P}$ column.

Table 3.1

P / N	a / cm	$\frac{1}{P}$ /
1.0	80.0	1.00
2.0	59.5	0.50
3.0	54.5	0.33
4.0	50.4	0.25
5.0	47.8	0.20

[1]

(d) Plot a graph of a / cm (y-axis) against $\frac{1}{P}$ (x-axis). Start the y-axis at a / cm = 30.

View solution

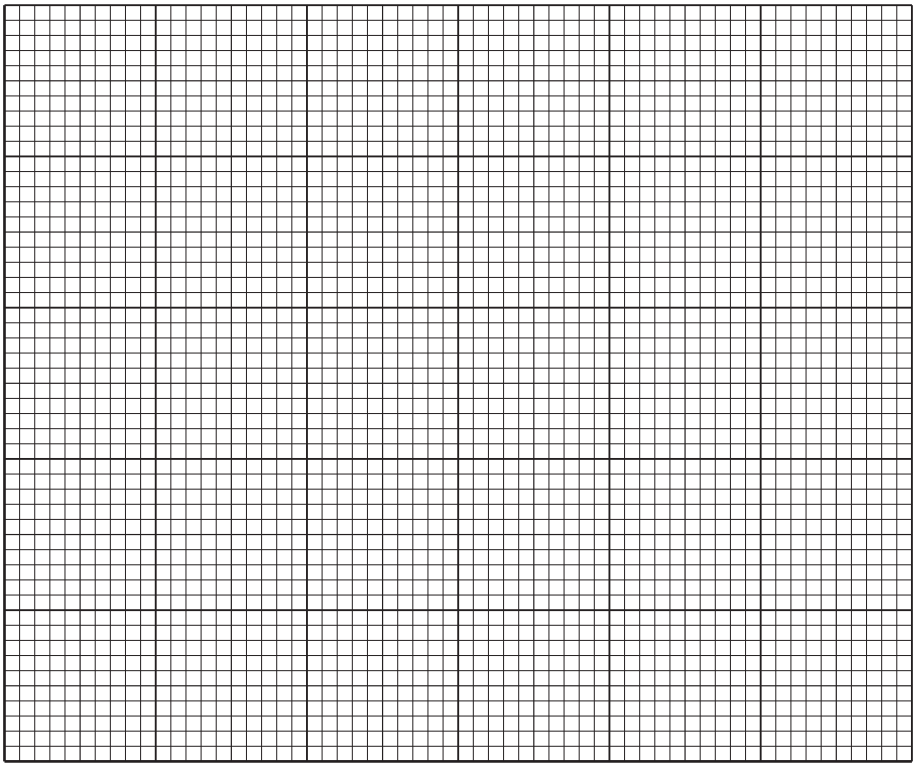

[4]

(e) Determine the gradient *G* of the graph. Show clearly on the graph how you obtained the necessary information.

View solution

G = ... [3]

(f) The gradient *G* is numerically equal to the distance *d* between the pivot and the centre of load Q. Record the value of *d* to a suitable number of significant figures for this experiment.

d = ... cm [1]

[Total: 11]

View solution

4 A student investigates the effect on the resistance of a wire when the tension in the wire is increased. The apparatus is shown in Fig. 4.1. The tension in the wire is increased by adding loads to the hook attached to the wire. The student measures the current I in the wire and the potential difference (p.d.) V across the wire. She determines the resistance R of the wire using the equation $R = \frac{V}{I}$.

The student takes all the necessary safety precautions. You are **not** required to write about safety precautions.

View solution

The following apparatus is available:

- resistance wire
- power source, connecting wires and crocodile clips
- ammeter
- voltmeter
- selection of loads and a hanger.

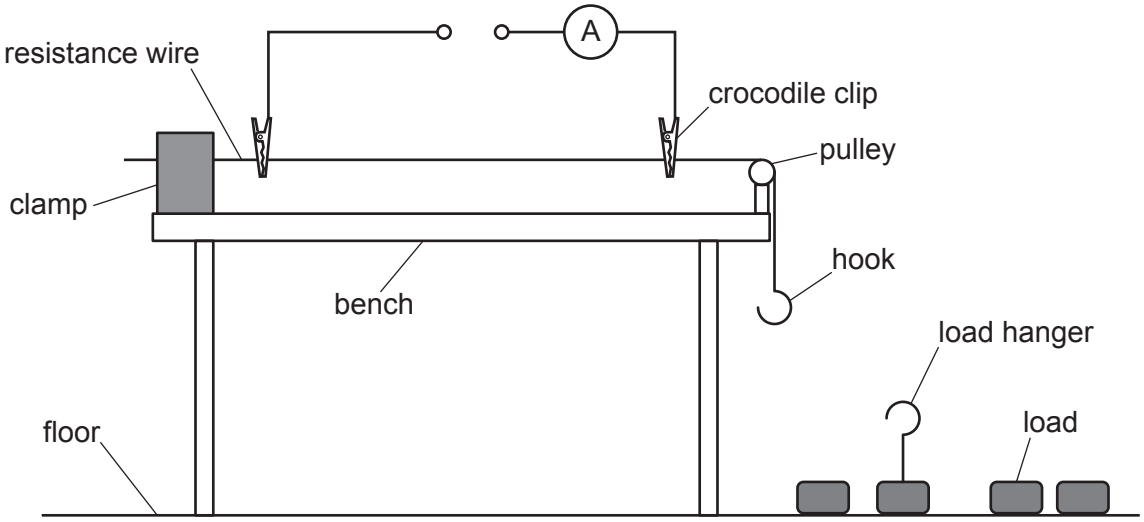

Fig. 4.1

Plan an experiment to investigate the effect on the resistance of a wire when the tension in the wire is increased.

You should:

- complete the circuit diagram in Fig. 4.1 to show a voltmeter connected to measure the potential difference across the resistance wire
- explain briefly how you would carry out the investigation
- state the key variables that you would keep constant
- draw a table, or tables, with column headings, to show how you would display your readings (you are **not** required to enter any readings in the table)
- explain how you would use your readings to reach a conclusion.

.....

.....

.....

.....

.....

.....

.....

.....

.....

.....

..... [7]

BLANK PAGE

Permission to reproduce items where third-party owned material protected by copyright is included has been sought and cleared where possible. Every reasonable effort has been made by the publisher (UCLES) to trace copyright holders, but if any items requiring clearance have unwittingly been included, the publisher will be pleased to make amends at the earliest possible opportunity.

To avoid the issue of disclosure of answer-related information to candidates, all copyright acknowledgements are reproduced online in the Cambridge Assessment International Education Copyright Acknowledgements Booklet. This is produced for each series of examinations and is freely available to download at www.cambridgeinternational.org after the live examination series.

Cambridge Assessment International Education is part of Cambridge Assessment. Cambridge Assessment is the brand name of the University of Cambridge Local Examinations Syndicate (UCLES), which is a department of the University of Cambridge.

© UCLES 2022