Cambridge Assessment International Education

Cambridge IGCSE™

CANDIDATE NAME									
CENTRE NUMBER						CANDIDATE NUMBER				

PHYSICS **0625/63**

Paper 6 Alternative to Practical **October/November 2022**

1 hour

You must answer on the question paper.

No additional materials are needed.

INSTRUCTIONS

- Answer **all** questions.
- Use a black or dark blue pen. You may use an HB pencil for any diagrams or graphs.
- Write your name, centre number and candidate number in the boxes at the top of the page.
- Write your answer to each question in the space provided.
- Do **not** use an erasable pen or correction fluid.
- Do **not** write on any bar codes.
- You may use a calculator.
- You should show all your working and use appropriate units.

INFORMATION

- The total mark for this paper is 40.
- The number of marks for each question or part question is shown in brackets [ ].

This document has **16** pages. Any blank pages are indicated.

© UCLES 2022

1 A student investigates the dimensions of a boiling tube.
She uses the apparatus shown in Fig. 1.1.

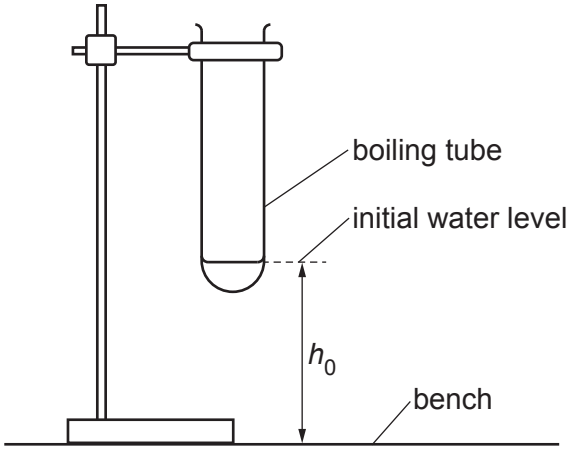

Fig. 1.1

(a) The student pours a small amount of water into the boiling tube and measures the height h_0 from the bench to the initial water level.

h_0 = 2.6 cm

Suggest **one** precaution that is taken when measuring the height of the water level to ensure the reading is accurate.
You may draw a diagram if it helps your explanation.

View solution

.....

..... [1]

(b) The student uses a measuring cylinder graduated in cm^3 to add a volume of water $V = 5.0\,cm^3$ to the boiling tube.
Part of the boiling tube, after the water has been added, is shown full size in Fig. 1.2.

View solution

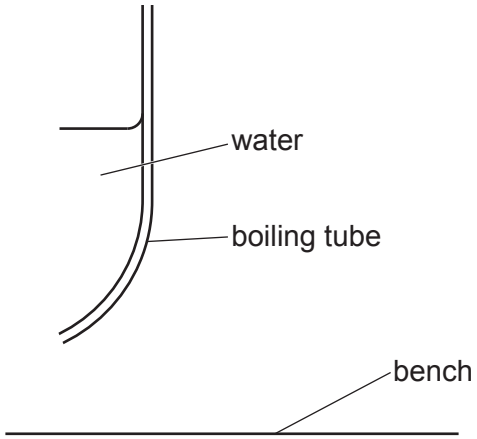

Fig. 1.2

Measure, and record in the first row of Table 1.1, the new height h of the water level from the bench. [1]

Table 1.1

V / cm^3	h / cm	H / cm
5.0		
10.0	5.5	2.9
15.0	6.7	4.1
20.0	8.3	5.7
25.0	9.6	7.0

(c) For the value of $V = 5.0\,cm^3$, calculate, and record in Table 1.1, the increase in height H of the water in the boiling tube. Use the value of h_0 from **(a)**, your value of h in Table 1.1 and the equation $H = (h - h_0)$. [1]

View solution

(d) Plot a graph of V/cm^3 (y-axis) against H/cm (x-axis).

View solution

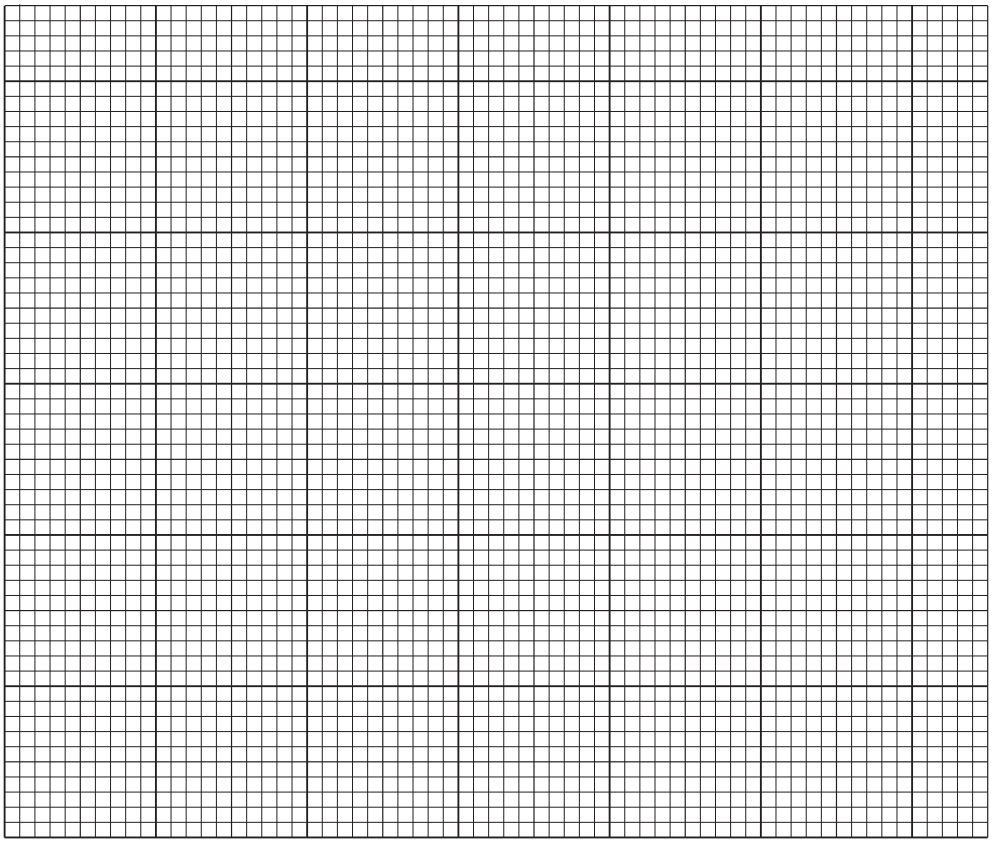

[4]

(e) (i) Determine the gradient of the graph. Show clearly on the graph how you obtained the necessary information.

View solution

gradient = ... [1]

(ii) Calculate D, the inside diameter of the boiling tube.

View solution

Use the equation $D = \sqrt{\frac{4G}{\pi}}$, where G is numerically equivalent to the gradient in **(e)(i)**.

D = ... cm [1]

(f) Suggest why it was important for the student to add a small volume of water at the start of the experiment.

.....

..... [1]

(g) Another student uses this experiment, with the same apparatus, to measure *D* for a small test-tube of diameter approximately 1.2 cm. He adds water in volumes of 1.0 cm^3 at a time. State and explain **one** reason why this is **not** an accurate method to use for this test-tube.

.....

..... [1]

[Total: 11]

View solution

2 A student performs an experiment on the cooling of water contained in a beaker. He investigates the effect of the colour of the outside surface of the beaker on the rate of cooling.
He uses the apparatus shown in Fig. 2.1.

Beaker A is covered with black card.
Beaker B is covered with shiny metal foil.

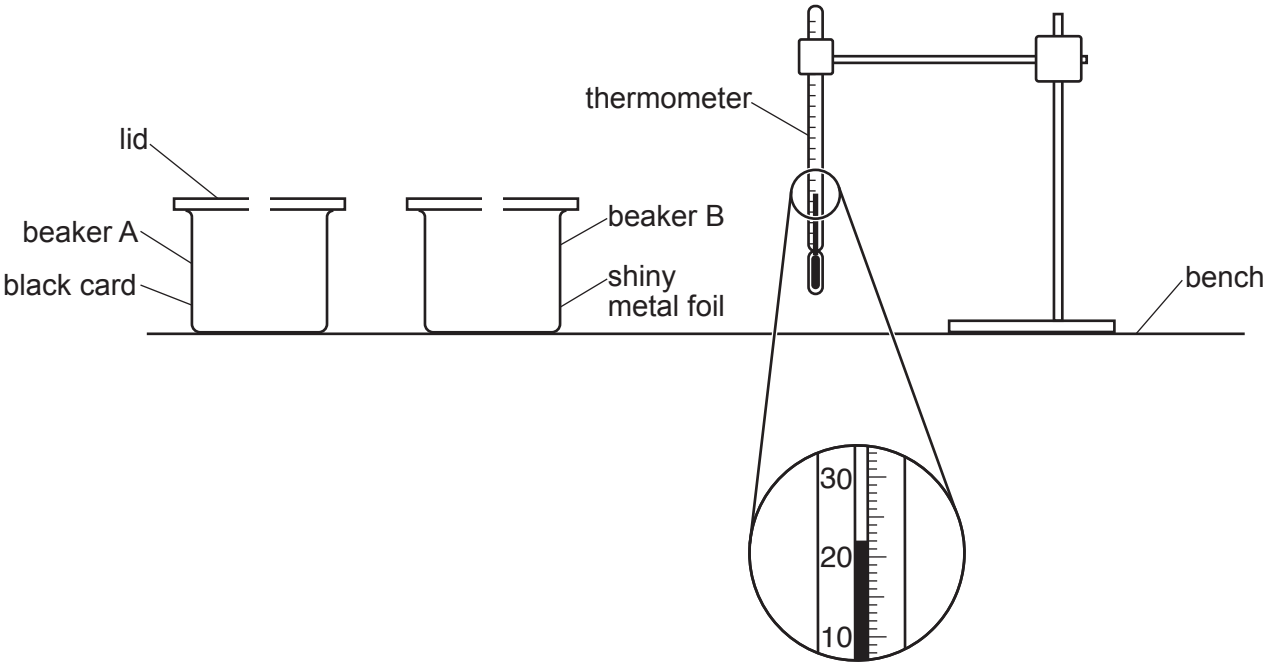

Fig. 2.1

(a) Record room temperature θ_R shown on the thermometer in Fig. 2.1.

View solution

θ_R = ... [1]

(b) The student pours a volume of 150 cm^3 of hot water into beaker A and records the temperature θ at time t = 0.

(i) Describe **one** precaution that can be taken to ensure that the temperature reading is as accurate as possible.

.....

..... [1]

He records, in Table 2.1, the temperature of the water in the beaker every 30 s.

View solution

The student repeats the process for beaker B.

(ii) Add units to the column headings in Table 2.1. [1]

View solution

Table 2.1

	beaker A with black card	beaker B with shiny metal foil
t/	θ/	θ/
0	86.0	85.5
30	80.5	83.5
60	76.0	82.0
90	73.0	80.5
120	71.0	79.5
150	69.5	79.0
180	68.5	78.5

(c) Write a conclusion stating if the colour of the outside surface of the beaker affects the rate of cooling of the water in the beaker.
Justify your answer by reference to values from the results.

View solution

.....

.....

.....

..... [2]

(d) **(i)** Calculate the average cooling rate x_A for the water in beaker A during the experiment.
Use the readings for beaker A from Table 2.1 and the equation

View solution

$$x_A = \frac{\theta_0 - \theta_{180}}{T}$$

where T = 180 s and θ_0 and θ_{180} are the temperatures of the water in beaker A at times t = 0 and t = 180 s.
Include the unit for the cooling rate.

x_A = ... [1]

© UCLES 2022

(ii) Calculate the average cooling rate x_B for the water in beaker B during the experiment. Use the readings for beaker B from Table 2.1 and the equation

View solution

$$x_B = \frac{\theta_0 - \theta_{180}}{T}$$

where T = 180 s and θ_0 and θ_{180} are the temperatures of the water in beaker B at times t = 0 and t = 180 s.
Include the unit.

x_B = ... [1]

(e) (i) A student states that the black card is a thermal insulator. He thinks this will affect the result.

View solution

Suggest an additional experiment to test this theory.

.....

.....

..... [1]

(ii) Suggest **two** variables which should be kept the same for the additional experiment so that the comparison with this experiment is fair. Assume that the same type of beaker is used.

1. .....

.....

2. .....

.....
[2]

(iii) State how the cooling rate of beaker A from the additional experiment is likely to compare with x_A from **(d)(i)** if the student's theory is correct. Explain your answer.

statement .....

explanation .....

.....
[1]

[Total: 11]

3 Some students investigate circuits containing resistors in parallel.
They use the circuit shown in Fig. 3.1.

All numeric answers must have appropriate units.

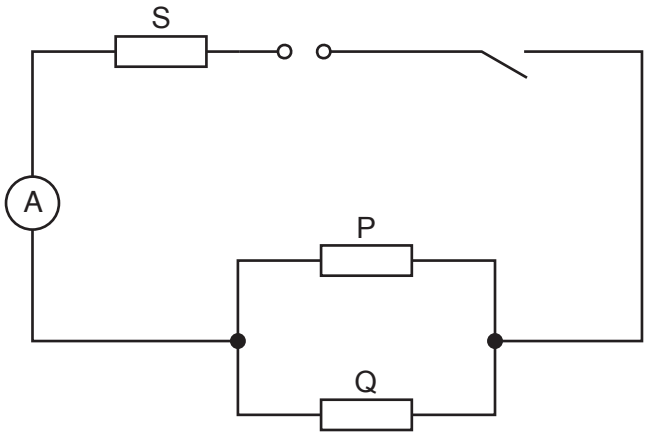

Fig. 3.1

View solution

(a) On Fig. 3.1, complete the circuit to show a voltmeter connected to measure the potential difference (p.d.) across the parallel combination of resistors P and Q. [1]

(b) A student measures the potential difference V across the parallel combination of resistors P and Q and measures the current I_T in the circuit.
The readings are shown in Fig. 3.2 and Fig. 3.3.

View solution

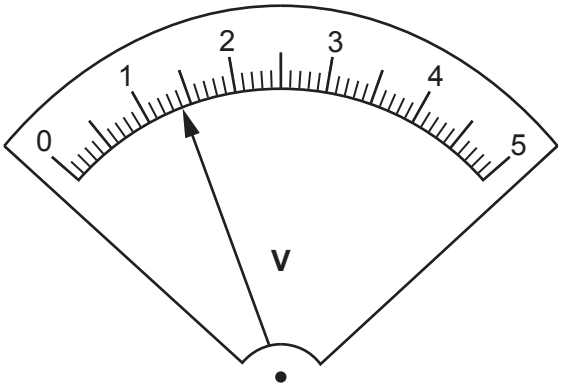

Fig. 3.2

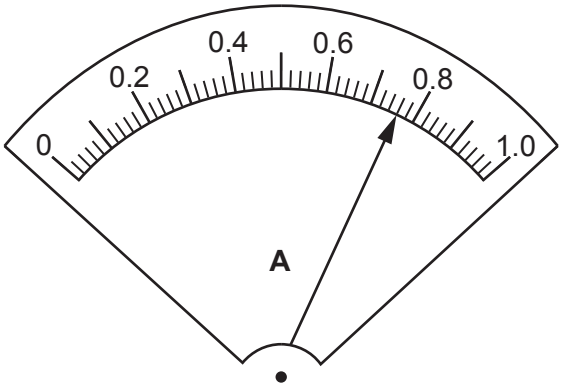

Fig. 3.3

(i) Read the values of V and I_T shown on the meters in Fig. 3.2 and Fig. 3.3.

V = ...

I_T = ...
[2]

(ii) Calculate the resistance R_{PQ} of the parallel combination of resistors P and Q.
Use your readings from **(b)(i)** and the equation $R_{PQ} = \frac{V}{I_T}$.

View solution

R_{PQ} = ...
[2]

(c) The student connects the voltmeter to measure the potential difference V_S across resistor S.
The reading is shown in Fig. 3.4.

View solution

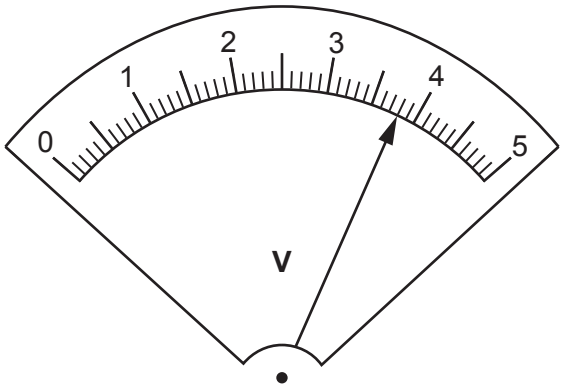

Fig. 3.4

Read the value of the potential difference V_S across resistor S shown in Fig. 3.4.

V_S = ...

Calculate the resistance R_S of resistor S.
Use your readings from **(c)** and **(b)(i)** and the equation $R_S = \frac{V_s}{I_T}$.

R_S = ...
[1]

© UCLES 2022

(d) The student connects the ammeter to measure the current I_P in resistor P.
He then connects the ammeter to measure the current I_Q in resistor Q.
The readings are shown in Fig. 3.5 and Fig. 3.6.

View solution

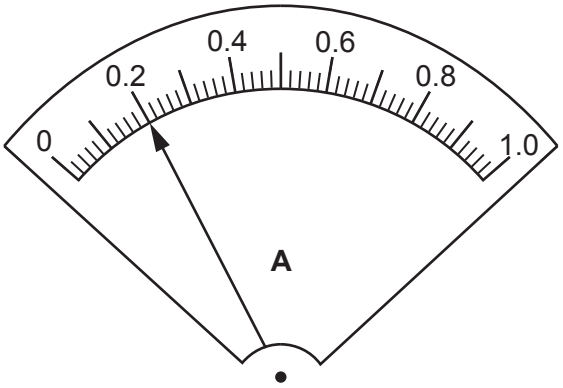

Fig. 3.5

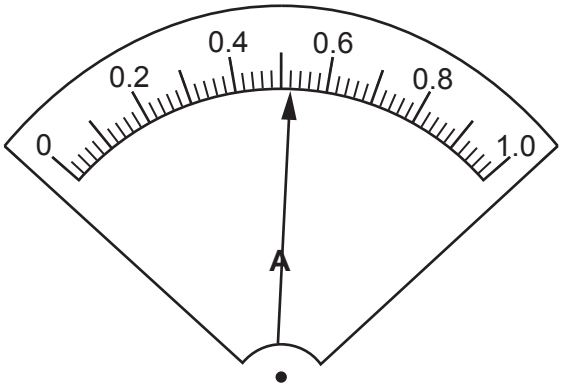

Fig. 3.6

(i) Read the value of the current I_P in resistor P shown in Fig. 3.5.

I_P = ...

Read the value of the current I_Q in resistor Q shown in Fig. 3.6.

I_Q = ...
[1]

(ii) A student suggests that I_T from **(b)(i)** should be equal to $I_P + I_Q$.
State whether your results support this suggestion. Justify your statement by reference to values from your results.

statement .....

justification .....

.....

.....
[2]

View solution

(e) (i) A student changes the circuit and uses a variable resistor to control the current in the circuit.
In the space provided, draw the circuit symbol for a variable resistor.

View solution

Mark with an X on Fig. 3.1 where a variable resistor is connected to control the current in resistor S without affecting the resistance of either of the parallel branches. [1]

(ii) The current in the circuit can be controlled by connecting a range of different resistors in place of resistors P and Q.

State **one** disadvantage of this method instead of using a variable resistor to control the current.

.....

..... [1]

[Total: 11]

View solution

4 A student investigates the effect of temperature on the bounce height of a squash ball.
A squash ball is a hollow rubber ball approximately 4 cm in diameter.

View solution

Plan an experiment to investigate how the bounce height of the ball changes as the temperature of the ball rises.

The apparatus available includes:
- a selection of squash balls
- standard laboratory heating equipment
- a beaker large enough for the squash ball to fit inside
- a supply of cold water.

In your plan, you should:

- list any additional apparatus needed

- explain briefly how to do the experiment, including any precautions to ensure reliable results (you may draw a diagram below if it helps to explain your plan)

- state the key variables to be kept constant

- draw a table, or tables, with column headings, to show how to display the readings (you are **not** required to enter any readings in the table)

- explain how to use the readings to reach a conclusion.

© UCLES 2022

.....

.....

.....

BLANK PAGE

BLANK PAGE

Permission to reproduce items where third-party owned material protected by copyright is included has been sought and cleared where possible. Every reasonable effort has been made by the publisher (UCLES) to trace copyright holders, but if any items requiring clearance have unwittingly been included, the publisher will be pleased to make amends at the earliest possible opportunity.

To avoid the issue of disclosure of answer-related information to candidates, all copyright acknowledgements are reproduced online in the Cambridge Assessment International Education Copyright Acknowledgements Booklet. This is produced for each series of examinations and is freely available to download at www.cambridgeinternational.org after the live examination series.

Cambridge Assessment International Education is part of Cambridge Assessment. Cambridge Assessment is the brand name of the University of Cambridge Local Examinations Syndicate (UCLES), which is a department of the University of Cambridge.

© UCLES 2022